SUB/CAN 1/66 – 8/66

JIB/CANS 1966

VOL. 1

JIB/CAN 1/66 - 8/66

THIS VOLUME CONTAINS ~~NATIONAL SECURITY AND / OR~~ some INTELLIGENCE MATERIAL OF A STILL-SENSITIVE NATURE. ~~CLOSED~~. REFER TO DFA/ATI reports 1, 5, and 7
CE VOLUME CONTIENT DES INFORMATIONS ENCORE SENSIBLES CONCERNANT LA SECURITE NATIONALE ET LES SERVICES DE RENSEIGNEMENT. ~~FERME~~. S'ADRESSER A DFA/ATI

Section / Article	Screener / Locateur	Release date Date du declassement
15(1)	D Lazle	

Partly

DECLASSIFIED

ACCESS TO INFORMATION
L'ACCES A L'INFORMATION
EXAMINED BY / EXAMINE PAR:
D Lazle
DATE / DATE:
Mar 25/94

JIB/CAN 1/66

SECRET

Copy No 20

1/66

JIB(CAN)

January/February 1966

DATE

JOINT INTELLIGENCE BUREAU
Ottawa

SUMMARY OF ITEMS

OF ECONOMIC AND TOPOGRAPHICAL INTELLIGENCE FROM CANADIAN SOURCES

(Unevaluated Information)

JOINT INTELLIGENCE BUREAU
Department of National Defence
OTTAWA, CANADA

DISTRIBUTION

External Affairs (D.L.2)	1 - 2
DGI (DIA - 20	
(NSA via DIA - 4)	3 - 35
DGI/DSTI	36
CBNRC (Library)	37 - 38
DIS via JIB(O)LO(L)	39 - 43
FORD via JIB(O)	44
JIB(A)	45 - 46
CIA	47 - 60
INR (State Dept)	61 - 62
Senior Military Advisor ICCS(Saigon) Indochina	63
JIB(O)LO(L)	64
JIB(O)LO(W)	65 - 68
JIB(O)	69
File	70
Spares	71 - 75

SECRET

SECRET
JIB(CAN)1/66

ITEMS OF ECONOMIC & TOPOGRAPHICAL INTELLIGENCE FROM CANADIAN SOURCES.

January/February 1966

/(ii)

The Director JIB (Ottawa) would be grateful for any suggestions or comments that the recipients of this Summary may care to make.

- - - - - - - - -

NOTE: High grade prints of photographs in this publication may be obtained, or negatives borrowed, from the Director JIB (Ottawa)

- -

EVALUATIONS

A. Completely reliable	1. Confirmed from other sources
B. Usually reliable	2. Probably true
C. Fairly reliable	3. Possibly true
D. Not usually reliable	4. Doubtful
E. Not reliable	5. Probably false
F. Reliability cannot be judged	6. Truth cannot be judged

SECRET
JIB(CAN) 1/66

I. CHINA

FUEL - Diesel
Shanghai, 30 Dec 65

1. Source obtained two samples of diesel fuel (light and heavy) provided to his vessel in Shanghai. These have been analysed and a copy of the report is given below.

Report & Date: DBR W/C 34/65 of 14 January 66
Source: DGI/INT S

CONFIDENTIAL

Date received: 30 Dec 65
Date Completed: 5 Jan 65

PACIFIC NAVAL LABORATORY
OIL REPORT

GP No. of Oil
Diesel fuel oil supplied by Shanghai Ocean Shipping Supply Corporation

Information:	Flash Point	Kinematic Viscosity at 100°F	Pour Point
(1) Light Diesel	185°F	3.24 es	18°F
(2) Heavy Diesel	228°F	7.10 es	60°F
Reference Specification 3/GP-6C Type C	125°F(min)	2.1-4.3	-10°F (max.)
Type D	125°F	2.1-4.3	+20°F (max.)

II. CHINA

SHIPPING - Boarding Reports
DAIREN, 17-22 December 1965

1. Source's vessel arrived 2205 hours on 17 December and berthed at 0452 hours on 18 December 1965, then departed 2253 hours on 22 December.

2. His vessel secured on the East Side of Pier #2.

3. With the aid of binoculars, Source was able to view the DALDOCK SHIPYARD and he was amazed that the yard was virtually empty of ships. Particularly noted was the absence of Soviet ships which frequented this yard.

Report: DBR WC 2/66
of 1 Feb 66
Source: DGI/INT S 2-4

SECRET
JIB(CAN)/66

CHART OF
CHINWANGTAO HARBOUR

Material which did not reproduce clearly on this chart is shown below.

1. Dredger outlet
2. Suction Dredger
3. Last (?), Large tug
4. Various entrances to underside of pier, to what appeared to be the workers' canteens and cook houses.
5. The Ford Construction may not be accurate, they(?) were just forrad of the bridge and the forecastle head had only a windlass mounted there.
6. Small stone buildings

FOOTNOTE

(Not drawn to scale or proportion)

Wednesday, 24 Nov 65:- 2113: v/l anchored off Chinwangtao. Creek point light log 302° ⓪ x 2.8'

Thursday, 25 Nov 65:- 0710: Port officials boarded. 0730: Quarantine granted, inspection passed. (This inspection most casual). V/l unable to enter harbour due to insufficient water in channel for us to proceed. Craft 30' 03" fore and aft. 0800: Light airs - rippled sea. 1200: Winds W 2/3, slight sea. 1600: winds W 2/3 slight sea. 2000: Wind N'ly 3, slight sea. 2400: Light airs, Rippled sea.

Friday, 26 Nov 65:- 0015: Lighter alongside to lighten vessel to allow entry to port. No more than 50 tons of cargo was discharged when a message was received from signal station to the effect that there was now sufficient water for us to proceed inwards which we did at very slow speed. 0640: v/l securely moored, stbd side alongside. 0930: commenced discharge of cargo. Working throughout the 24 hours each day.

Tuesday, 30 Nov 65:- 0140: Completed discharge of all cargo. Reason it took so long to discharge was the lack of rail wagons and trucks to take the wheat away. The vessel remained alongside rigging feeder boards until 1641 then we shifted to anchorage to complete rigging same. During the course of the morning one small naval craft left post, it appeared to be a mine layer No. B601; this was the only naval craft we saw.

Wednesday, 1 Dec 65:- 0600: Feeder boards erected. Inspection carried out once again very easy requiring only the officers to present themselves. 0605: Inspection completed. 0645: v/l sailed for "Bairen" to .. bunkers. 1741: v/l anchored off "Bairen" 1845: Shore officials boarded and inspection once again very easy. 2000: Shore officials disembarked leaving two guards onboard.

Thursday, 2 Dec 65:- 0930: Oil barge alongside. 1045: second oil barge. 1435: completed bunkering. 1600: Shore officials onboard, no inspection carried out. 1630: Shore officials disembarked. 1636: v/l sailed for Japan. No naval craft were seen in Bairen from our anchorage; the only thing of interest noted was the oil cracking plant which was in operation. V/l was anchored at a log of 337°0 x 2½' from HUANG PAI TSUI lt., cracking plant approx 307° from us.

SECRET
JIB(CAN) 1/66

III. CHINA

Report: DBR WC 1/66
Source: DGI/INT 2-4

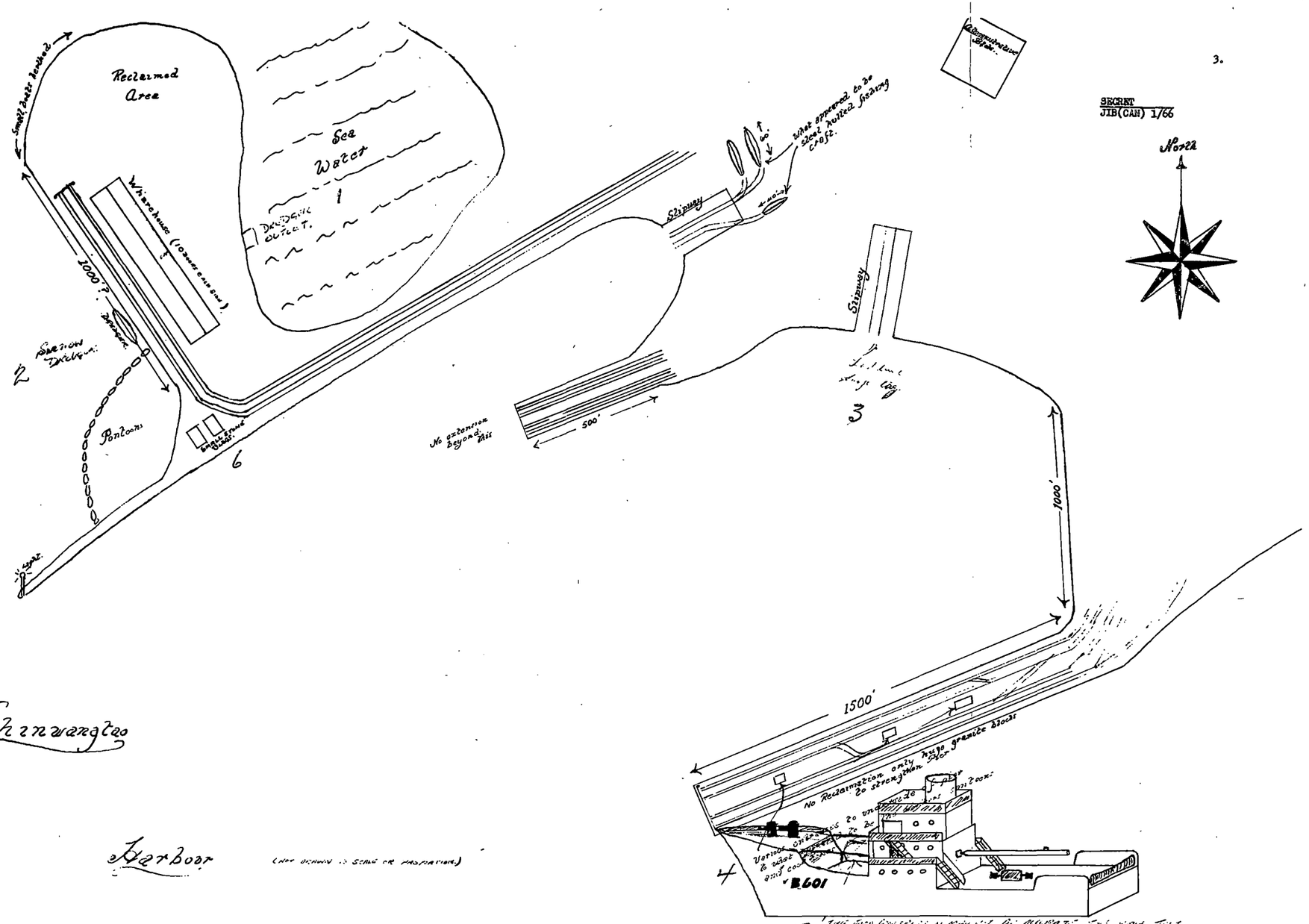

Wednesday 24th Nov '65 – 0113 ½ anchored off Chinwangtao – 'it will point. Light leg 302° ⊙ x 2.8'

Thursday 25th Nov '65 – 0710 Port Officials boarded 0730 Quarantine granted and inspection passed. (This inspection was not carried) ½ unable to enter the harbour due to insufficient water in the channel. Draft 30'03" fore & aft.
0800 Light airs – Rippled sea. 1200 Winds W 2/3. – slight sea. 1600 Winds W 2/3 slight sea. 2000 Wind N^ly 3 slight sea. 2400 Light airs – Rippled sea.

Friday 26th Nov '65 – 0015 Lighter alongside to lighter vessel 'it' after entering the port. No more than 50 tons of cargo was discharged when a message was received from signal station to the effect that there was now sufficient water for the vessel proceed towards which we did at a very slow speed. 0640 ½ securely moored, attd side alongside. 0930 commenced discharge of cargo. Nothing throughout the 24 hours each day

Tuesday 30th Nov '65 – 0140 Completed discharge of all cargo & Crew at work so long as checking was the lack of rail wagons and trucks to take the wheat away. The vessel remained alongside rigging feeds boards until 1600 then we shifted to anchorage to complete rigging same. During the course of this morning one small naval craft left port & shortly after it appeared to be a mine layer No B 601 this was the only naval craft we saw

Wednesday 1st Dec '65 – 1600 Feeds boards erected. Inspection carried out once again very easy requiring only the officer to peruse thermometers. 0645 Inspection completed. 0645 ½ sailed for "Baiyer" to take bunkers.

Thursday 2nd Dec '65 – 1700 ½ anchored off "Baiyer" 1800 Port Officials boarded and inspection once again very easy. 2000 Port Officials disembarked leaving two guards onboard
0930. Oil Cargo alongside 1045 second oil barge 1435 completed bunkering. 1600 Port Officials embarked to inspection carried out 1630 Port officials disembarked 1630 ½ sailed for Saigon. No naval craft were seen in Basin from our anchorage and the only thing of interest which was noted was the oil cracking plant which was in operation. ½ was anchored @ a bearing of 337° ⊙ x 2.4 from HUANG-PAI-TSUI L.T. and the oil cracking plant was bearing approx 307° from us.

000010

IV. INDOCHINA

PERIODIC INTELLIGENCE REPORT
Hanoi, Nov-Dec 1965

Observations

1. The number of women on duty at static anti-aircraft gun sites tends to support the view that they are assuming a greater responsibility in the manning of the various sites.

2. On a number of occasions groups of uniformed and unarmed young men have been seen entering the city, from the countryside. No information has been obtained to indicate the status of these groups. It is possible that they are soldiers returning from leave.

3. Many stores now have radios and watches on display. These items are apparently for sale. Plastic shopping bags have appeared in large numbers and provide one of the few bits of colour seen on the city streets. Stores are well patronized particularly on Sundays, although many of the people seem to be window-shopping only. Beauty shops are in operation and appear to have no lack of customers. The equipment noted in these establishments compared favorably with that seen elsewhere.

4. Slit trenches and spider holes have been constructed on all major streets within the city. They are approximately 20 - 30 ft apart. Source considered they were sited so as to serve two purposes, protection against air raids and defence against ground attack, although other sources do not confirm latter purpose.

5. Majority of persons seen on the streets gave Source the impression that they are in good spirits.

6. Convoy of nine (9) armoured cars, possibly BTR - 40s, travelled through the city EAST to WEST. Vehicles mounted twin 14.7mm machine guns.

7. It appears to have been a good crop year. Claims have been made of rice yields in excess of 5 tons of paddy per hectare (2.471 acres).

Radioning

8. Rice, meat (excluding fowl and fish) and fuel supplies such as wood and coal continue on the ration list.

9. Locally grown produce is brought into the city daily and seems plentiful.

10. Cheese, butter, milk and canned ham can still be found in the city. The public dining halls or restaurants are used mostly for the midday meal.

(Hanoi, Nov-Dec 65 cont'd)

Rail Transportation

11. Two railway spurs have been recently constructed within the city. The first is in the SOUTHERN part of the city running parallel to the main EAST-WEST road PHO NGA TU SO. The second is on the EAST side of the RED RIVER near the bridge. There is a ramp leading to the river at this point.

12. Most trains observed entering the city have been composed of 30 cars. The locomotives are coal-burning type painted with a green camouflage design. Some cars are similarly treated. On one occasion a doubleheader hauling a 40-car train was observed.

13. Movement into the city takes place during early morning and departing trains leave at dusk.

14. Observation of the roadbed in the vicinity of the city indicates that the standard of maintanance is good. Rails are approximately 20 feet in length and are joined together by bars bolted into place. Ties are of metal about one foot wide.

Anti-Aircraft Defence

15. A conventional gun site has been noticed in the SOUTH-EASTERN part of the city just NORTH of the main road PHO MINH KHAI and approximately 2000 meters from the river. The guns seen are smooth-barrelled (no muzzle brake) with a twin-tube buffer system. No indication of radar equipment was seen.

16. A heavily dyked site on WEST bank of the river near bridge (500 meters SOUTH) appears to have the configuration of a conventional gun site, but no weapons have been seen.

Vehicles

17. A large number of cargo-carrying vehicles are seen on the streets of the city. Movement generally takes place at night. Some vehicles are of the 10-ton cab-over-engine 10-wheel type.

18. One convoy of 10 apparently new Russian vehicles (3 tonners) was observed moving accross the bridge towards the airport. Painted numbers of front bumper were consecutively 4034 to 4043.

19. Twelve new M/C combinations were observed apparently being delivered to a military establishment in down town HANOI. They bore Russian character on the side of the gas tank.

Report & Date: No. 1617 of Jan 66
Source: Reliable Canadian

SECRET
JIB(CAN)1/66

V. CUBA

SHIPPING - Electronic Reports
Cuban Mership BAHIA DE MARIEL
Halifax 2 Dec 65

1. The Cuban merchant ship BAHIA DE MARIEL was inspected in Halifax, 2 December 1965. Her port of registry, Havana; owners, Empresa Consolidada de Navegacion Mambisa; callsign CLYM; official number 424; gross tons 3905.

Date of Report: 2 Dec 65
Source: DGI/INT S

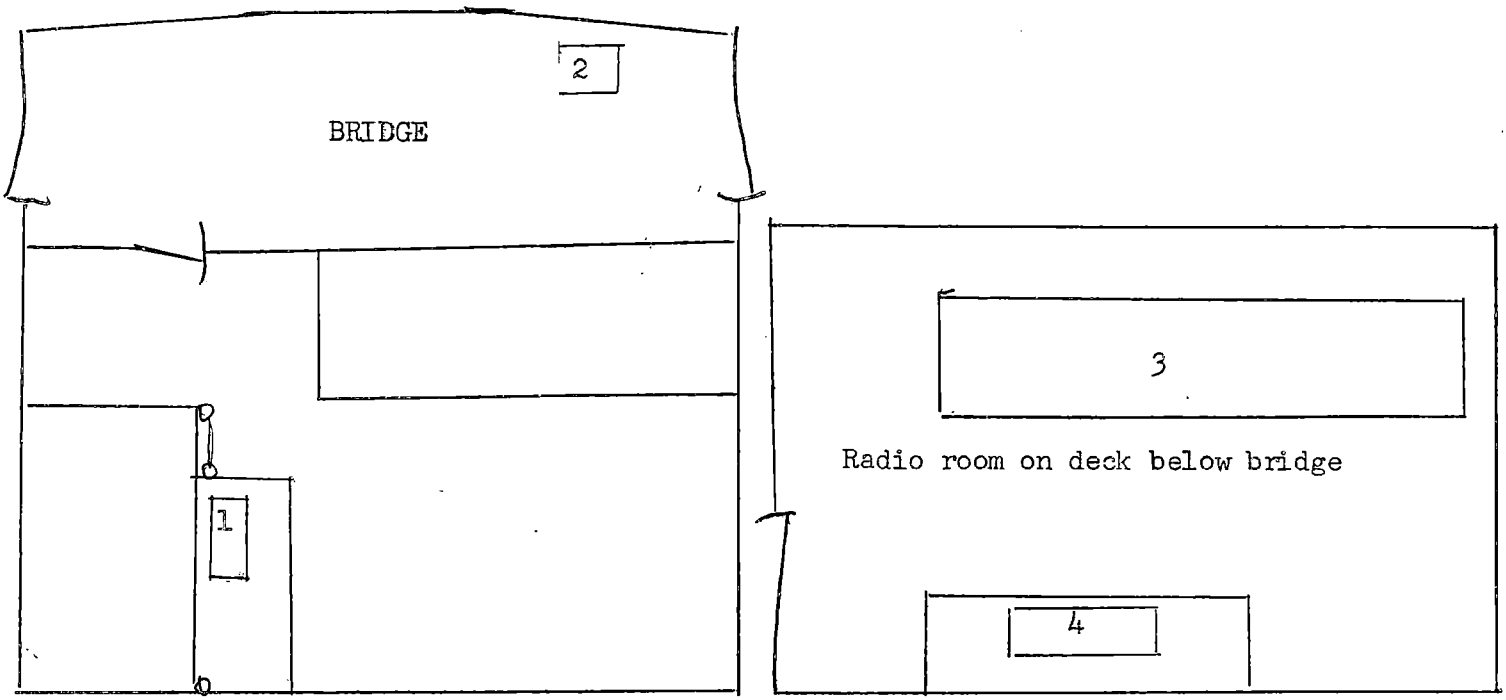

(1) Direction finder, Make, Mackay Radio; type, 106B

(2) Radar, Make, Kelvin Hughes; type: 14/12

(cont'd)

(Cuban mership BAHIA DE MARIEL)

SECRET
JIB(CAN)1/66

(3) RCA Console consisting of the following units:

Main Transmitter, Model ET-8024A, 200 W, A1, A2, 410-500 Kc/s

Emergency Transmitter, Model ET-8023, 40W, A1, 410-500 Kc/s; also A2

Shortwave Transmitter, Model ET-8025, 200W, A1, 4-23 Mc/s

Main Receiver, Model AR-8510, 14-650 Kc/s

Emergency Receiver, Model AR-8510, 14-650 Kc/s with 12V Battery power supply

Shortwave Receiver, Model AR-8506-B, 85 Kc/s-25 Mc/s

Automatic Alarm, Model AR-8601

Automatic Keying Device, Model AR-8651

(4) Radiotelephone transmitter and combined receiver; Make, General Electric; Type BC-375-E, 75W, 1500-3000 Kc/s

The ship's R/T transmitter-receiver combination which is shown in the diagram on the previous page is of an ancient vintage and the operator says a change of frequency involves a re-tuning of the transmitter, which is a very difficult process.

The ship's lifeboat transmitter-receiver combination which is not shown in the diagram is made by Mackay Radio and is type 401A, and operates on the frequencies of 500 and 8364 Kc/s. This unit is located in a room near the lifeboats.

The ship carries one radio operator.

(Cuban mership BAHIA DE MARIEL)

SECRET
JIB(CAN)1/66

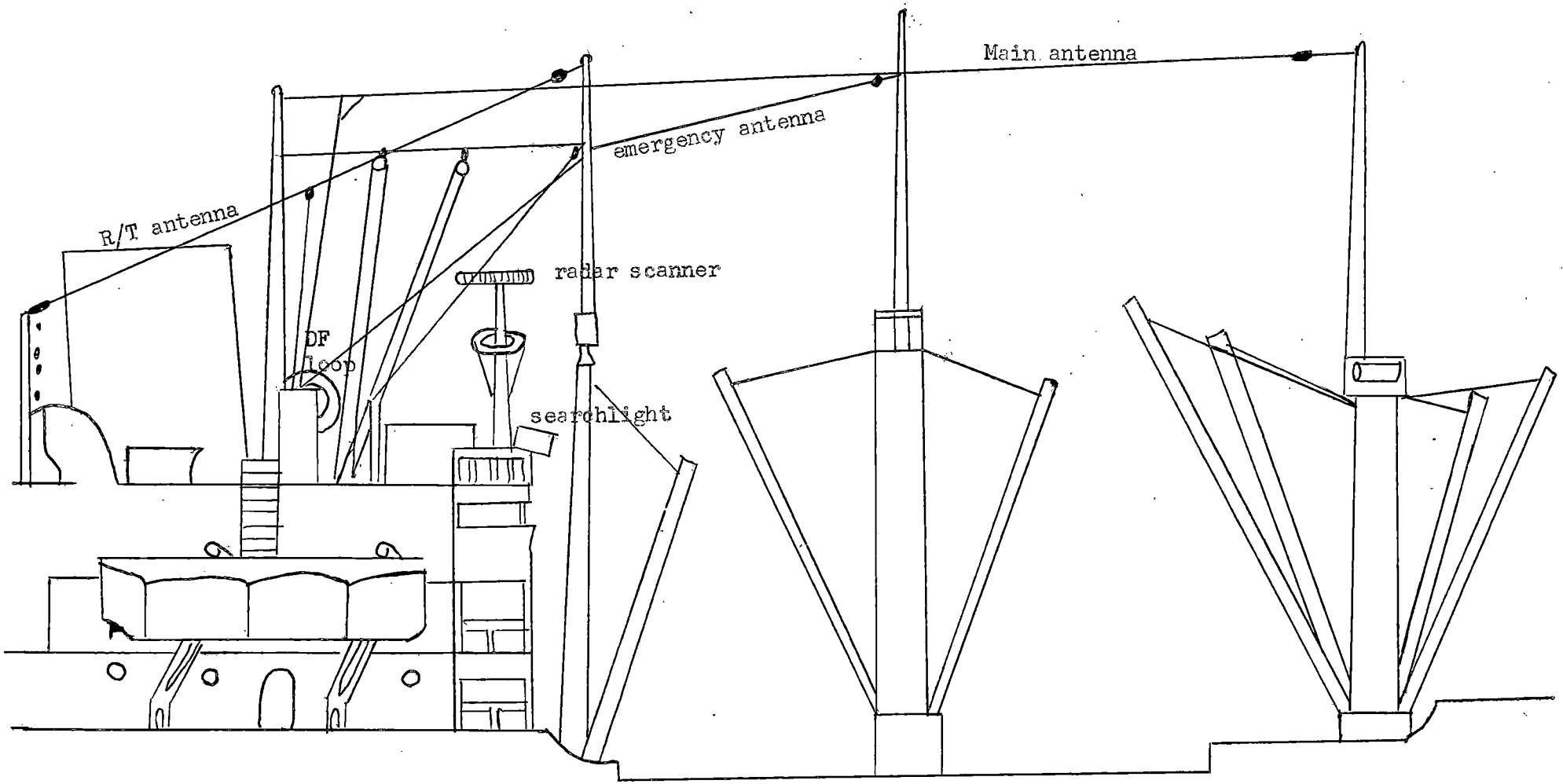

SECRET
JIB(CAN) 1/66

VI. FINLAND

SHIPPING - Icebreakers
Sandvikens Shipyard,
January 1966

1. The icebreaker TARMO was delivered in November 1963, and is the name ship of two icebreakers of this type built by Sandvikens Shipyard. The other ship of this class is the THOR, delivered to Sweden in February, 1964. Icebreakers of a similar class but with less SHP, 10,560, is the VOINA Class, of which five were built - VOINA was delivered to Finland in 1953, ODEN to Sweden in 1937, and three were for the USSR in 1954, 1955 and 1956.

2. Sandvikens Shipyard has not yet signed contracts for the construction of three icebreakers of the MOSCOW class for the USSR. Under the 1966-70 Finnish-Soviet trade agreement the construction of three such units were called for, but to date the contracts have not been signed due to difficulties in arriving at a satisfactory price per unit. The Soviets have demanded the same prices as they contracted for during 1960-65, which do not reflect the 20% increase in the cost of material and labor which has occurred in Finland during the last two years. The icebreakers, if contracted for, will be the same as the MOSCOW Class, i.e., SHP 22,000, and will have slight modifications, i.e. better bridge visibility, heeling system and life boats. Sandvikons were also asked to prepare a feasibility study for an improved version of the MOSCOW class using 35,000 SHP, which might be built after 1970.

Report & Date: CNA/N Hel 05 of 14 January 1966

Source: CNA/Moscow

VII. U.S.S.R.

TOPOGRAPHICAL INTELLIGENCE
Moscow/Rzhev Trip and Town Observations, 25-26 Sept 65

1. The Canadian Air Attache and Assistant Air Attache made a rail journey MOSCOW/RZHEV/MOSCOW on 25-26 September 1965, during which they made the following observations.

2. Observations are keyed to TFP #65/64; Kms and sides are given as travelling westward.

RAIL JOURNEY - MOSCOW/RZHEV

SERIAL	JIB	KM	SIDE	OBSERVATION
1	---	--	IHS	Adjacent to tracks: Design Bureau #2 and A/C Experimental Plant #5. No activity noted on either day.
2	---	14	IHS	Tushino Airfield: 6 SAF CRATE/COACH, one with a blue 14 bort number; 5 SAF CAB; 1 SAF HARE; 2 SAF COLT. No radar on the field. On the tower are 4 DISCONE and 1 SMALL CROSS.
3	---	22	IHS	Vertical caged dipole array.
4	---	25.3	---	New power pylons cross the RR. No wires strung.
5	1	26-29	RHS	MWRR Towers. No towers were found.
6	2	34.5	IHS	Military Installation. There is no installation which appears to be military in this area.
7	3	36.5	IHS	Possible Garrison Area. There is no Garrison Area here.
8	4	38	IHS	U/I Installation. Still no clue as to function.
9	5	40	RHS	Radio Relay Tower. Not seen with good visibility.

(Moscow-Rzhev Trip, Cont'd)

SECRET
JIB(CAN) 1/66

SERIAL	JIB	KM	SIDE	OBSERVATIONS
10	6	53?	---	Rail Line. No activity. At km 50 a rail line crosses underneath the main line in a N/S direction. This line is in extremely good condition.
11	7	57.5	IHS	2 KM distant MWRR. The antennce are oriented parallel to the rail line.
12	--	80.7	RHS	RR Power Switching Station.
13	9	95	RHS	In the area of Moscow SAM E29-3 a u/i structure was seen projecting above the tree line. Since the distance could not be determined no estimate of size can be given. A memory sketch follows. Not to scale

TREE LINE

14	--	103.5	IHS	Switching Station.
15	--	105.3	IHS	New rail spur being built to the south.
16	--	---	---	There is considerable work in progress preparing what appears to be a rail bed in preparation for double tracking. The line is presently single track electrified.

RZHEV TOWN

3. It was immediately evident on arrival in Rzhev why there is not TP for this city. The city itself is almost devoid of military or economic interest. The only

points worth mentioning are as follows:

(a) The main street, which runs north/south and crosses the river is called Ulitsa Kommuni.

(b) The radio tower for the town is on the north bank of the river and estimated at 220'. It has obstruction lights.

(c) The offices of the Military Komendatura and Militsia are on the street running south from the town square on the north bank of the river.

(d) Only two military vehicles were seen. Both GAZ69: Licence 01-28 RSh
61-61 GD

4. The only troops seen were two transport sergeants on black.

5. Approximately 7 SAF officers were seen, presumably associated with the military airfield outside of town.

6. Travellers cut their stay short and returned to Moscow 24 hours early.

CONVERSATION: ROCKET KURSANT

7. Travellers returned to Moscow in a coach one step above "Obschii" class and were fortunate to hear an approximately 40 minute dissertation by a Kursant purporting to have seen duty on an IRBM/MRBM site and now on an officer course specializing in technology of "long range" rockets. He was obviously trying to impress a young lady, and although it is difficult to assess the truth of his statements the following comments are forwarded as overheard. Unfortunately the noise level on the train, including the cackling of live hens, prevented us overhearing a number of other points.

8. He at various times stated:

(a) he had 3 years service prior to being recently selected as a Kursant;

(b) he had served at a rocket sight in the Baltis area (pri-Baltike) near the town of Verenya or Vereya. The site was located in the (prob) Tishenko woods;

(c) the rocket troops have a ratio of one officer to five men with present strength being 4,000 officers and a total (although secret) of approximately 25,000;

(d) last winter at his missile base there was a heavy snow fall. The did not have adequate snow removal equipment and were forced to do the clearing by hand. (He wore ordinary boots and almost froze his feet);

(e) each missile was inspected daily 0800 by a team of two men;

9. In addition to the above statements about his work he made the following comments:

(a) as a result of numberous complaints, they have been promised more extensive correspondence courses in civilian specialties;

(b) he also complained (or boasted) about the long hours he was forced to work and the little time off they received;

(c) as a possible reflection of their political and military indoctrination, he stated that if the US invaded Russian(sic), after the Russians had repelled the agressors and destroyed all the US and European major cities with nuclear weapons, it would still be the job of the infantry to occupy and control the "liberated" areas;

(d) he also stated categorically that the US would require 11,000,000 troops to "defeat the soldiers and partisans" of South Vietnam.

Evaluation:	B2
Report & Date:	IR A180/65 of 27 Sep 65
Source:	CAA/Moscow

SECRET
JIB(CAN) 1/66

VIII. U.S.S.R.

TOPOGRAPHICAL INTELLIGENCE
Zhdanov, Sudomekh, Neva,
Miscellaneous Naval Observations,
12-13 October 65.

1. The Canadian Naval Attache accompanied the US Naval Attache on a tour which included Zhdanov, Sudomekh, Neva Admiralty Baltic, and miscellaneous naval observations, on 12-13 October 1965.

2. A full report has been made and circulated to interested persons (see British IR RUS 500/460 of 15 October 65).

SECRET
JIB(CAN) 1/66

IX. U.S.S.R.

TOPOGRAPHICAL INTELLIGENCE
Trip Moscow-Kalinin, 29 Dec 65

1. The Canadian Air Attache and Assistant Air Attache made a trip MOSCOW-KALININ-MOSCOW on 29 December 1965, by car, during which they made the following observations.

2. All Km readings are from MOSCOW on the MOSCOW-LENINGRAD Highway.

TFP SERIAL	KM	OBSERVATIONS
	29.1 R	The New Road to Sheremetevo is still under construction.
	32	This is the first of several hoof and mouth disease control points encountered. It consists of a rough section of the road about 30 ft. long over which a sawdust-like material has been strewn in quantity. One is obliged to drive across this at about 10 Km/hr.
	38	Truck 11-17. 8X
	41 L	"Apartment blocks". This area is still under construction. Observers are unable to identify the establishment.
	63	GAZ 69 94 33 3 ϕ Bus (empty) 73 38 6E Ambulance 66 47 ϕW
	76	Truck 61 06 W6
	78	Hoof & Mouth disease control point.
	85 R	Construction - MOSCOW SAM E-33. Poor visibility limited observation. No cranes noted by the second and third domes.

SECRET

(Trip Moscow-Kalinin, cont'd)

TFP SERIAL	KM	OBSERVATION
	90 R	Aircraft count:- 6 CUB/CAMP 6 CRATE 3 CAMEL
	109	This is the border between the Moscow and Kalinin oblasts. A hoof & mouth disease control point located here.
	110	Hoof & Mouth disease control point. Observers were required to get out of the car and put feet in the "Sawdust".
	142.3	Hoof & Mouth disease control point.
	158	Hoof & Mouth disease control point.
	178.5	Kalinin Airfield. Only the tail of one BADGER could be seen in poor visibility. One COPT seen airborne nearby.
	178	Military Storage Area. Several rocket launchers and tanks stored under canvas. All equipment was snow covered and no activity was noted.

3. Surveillance. One known Volga (lic. #72-93--) tailed observers to 40 K limit. Otherwise surveillance, if any, was certainly discreet.

Report & Date: IR A209 of 30 December 1965
Source: CAA/Moscow

SECRET
JIB(CAN) 1/66

X. U.S.S.R.

SHIPPING - Boarding Report
Nakhodka, 28 Oct-3 Nov. 65

1. Source's ship approached NAKHODKA on a course of approximately 285°, passing about 2.5 miles off MYS POVOROTNGY before altering North into the anchorage. Local authorities asked for his "reasons in writing," and also asked him to submit a chart showing his course. Source submitted both and nothing more was said.

2. The vessel arrived at anchor 28 October 1965 (see sketch, Appendix "A").

3. Source stated the light off Banka Kreyser now flashes every 7 seconds. A radar station was operating on the hill half a mile north of Mys Povorotngy.

4. Thirteen tanks were counted at a position on the shore of Bukhta Chada Udzha (see Appendix "A"), and a small pier was constructed out into the Bay with intake and output pipes. This entire area is under construction, and source believed this is going to become an oil storage depot.

5. Source's ship had a draft of 31' and he believed the depth of the water alongside the Main Wharf was 34'.

6. While discharging at the berth at the north end of the Main Wharf (see Appendix "A"), source observed a road under construction, probably to join the tank site with a new wharf built on the east side of Bukhta Nakhodka. This wharf, source believes, is to be extended southward and Mys Lindgolma Point will probably be eliminated. The present wharf extends right up to the tip of Mys Astafveva and part way up there is a fence built across the point (see Appendix "A"). Beyond this fence is Naval property.

7. To the South of this new wharf is the Fisheries Wharf and in addition to fishing trawlers, large mother ships also berth here. The wharf directly across from the Fisheries Wharf is now utilized for merchant ships.

8. The Main Wharf has been extended northwards and source stated that the lights shown on Admiralty Chart 3041 as being off this wharf, no longer exist, including one at the south end of the wharf and one directly off Mys Astafveva. Passenger ships now use the berths at the south end.

9. The point to the north of this main wharf is used for the fabrication of cement blocks.

10. Discharging was effected by crane.

11. Source stated the radio for Nakhodka is UIK, 500 Kc/s but now working on 523 Kc/s.

Report & Date: DBR WC 27/65, 5 Jan 66
Source: DGI/INT S

SECRET
JIB(CAN)1/66

APPENDIX A

NAKHODKA

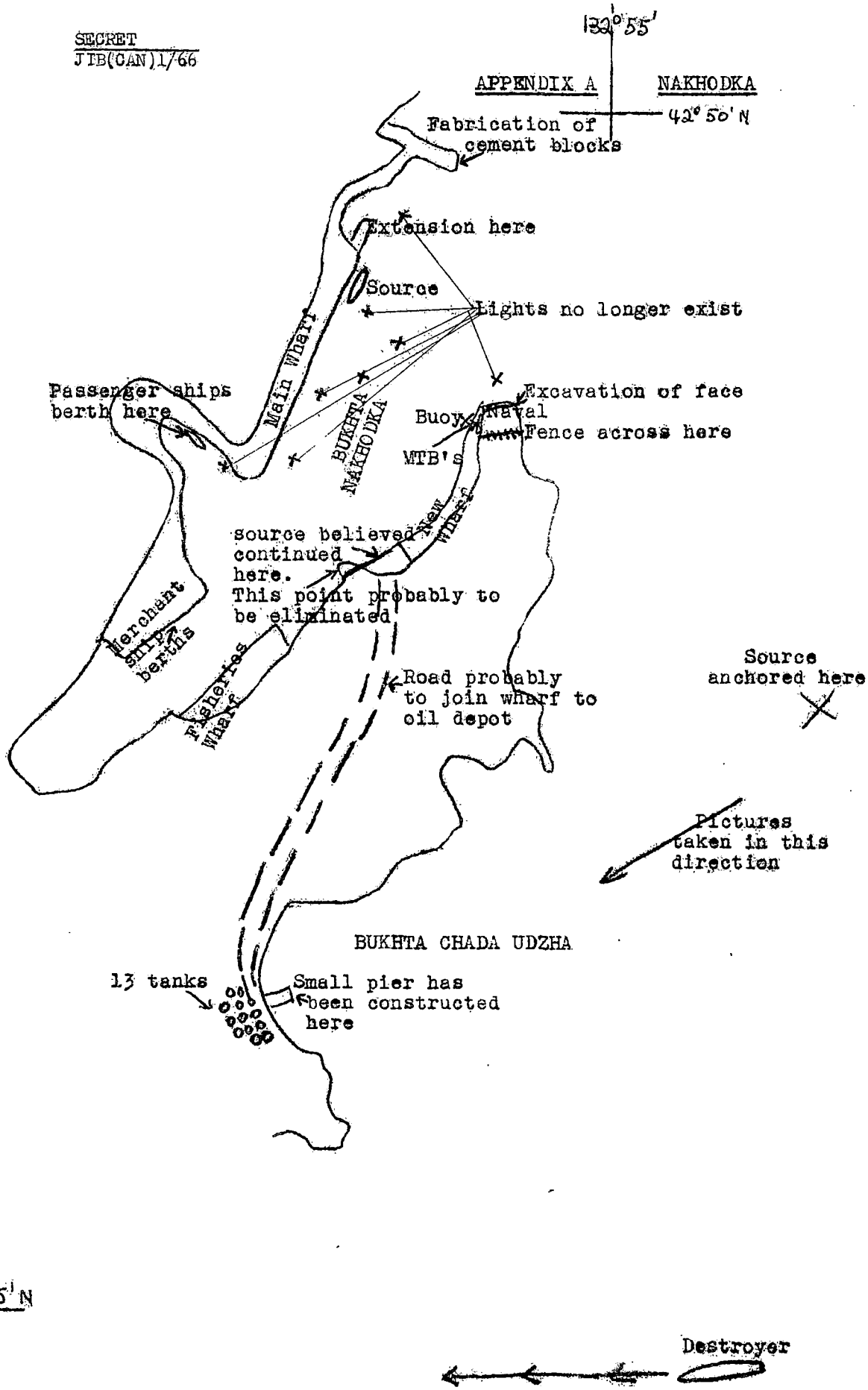

SECRET
JIB(CAN) 1/66

U.S.S.R.

XI.

SHIPPING - Merships
Visit, BALASHIKHA,
Halifax, 12-22 Jan 66

1. The Soviet mership BALASHIKHA (callsign UNNW, GT 11,205) arrived at Halifax 0240Z hours on 12 January 1966, and departed at 0005Z hours on 22 January.

General Information

2. It was noted that three of the ship's officers appeared to have had previous naval training - that is, their bearing and appearance was considered to be superior to that of the average merchant ships' officers.

Personalities on Board

3. Description of Master:

Name:	VLADIMIR BACHINSKY
Height:	5' 7"
Weight:	150 lbs
Hair:	Black, straight
Complexion:	Dark
Features:	Sharp, with full nose
English:	Good

Date of Report: 8 Feb 66
Source: DGI/INT S

SECRET
JIB(CAN) 1/66

XII. U.S.S.R.

SHIPPING - Merships
Passenger Vessel MIKHAIL KALININ, 27 Dec 65

1. The Soviet passenger vessel MIKHAIL KALININ visited Halifax on 27 December 1965.

2. This ship is employed as a passenger ship to ferry new crew members from Russia to the Soviet fishing fleet, taking the previous fishing fleet crew members back to Russia on the return journey.

3. A patient, VELENTINA SERGEEVA, was hospitalized at Camp Hill DVA Hospital on the ship's arrival. A successful appendectomy was performed, the patient released, and returned to Russia via a Soviet merchant ship.

4. The ship on this occasion was in Halifax approximately six hours allowing enough time only to make hospital arrangements for, and to land, the patient. The ship was noted to be quite full of passengers, both male and female.

5. It was also noted that whilst the ship was in port all doors and hatches leading from inside the ship to the upper deck were locked and a guard was placed at each entrance. In addition, there were sentries placed at the foot of the brow, on the jetty by the stern, and on the jetty by the bow. This is a most unusual occurrence since personnel from other Soviet ships visiting Halifax appear to have complete freedom of movement in debarking and embarking.

Date of Report: 21 Jan 66
Source: DGI/INT S

SECRET

SECRET
JIB(CAN)1/66

XIII. USSR

SHIPPING - Merships
Soviet VELIKY USTIUG,
Halifax 12-22 Dec 65

1. The Soviet motor cargo vessel VELIKY USTIUG (callsign UKXA, Official No. 27623) was in Halifax 12-22 December 1965.

Personalities on Board

2. The Captain:

Height:	5 ft. 9 in.
Weight:	175 lbs
Hair:	Dark, brushed straight back, receding
Eyes:	Green
Facial Features:	Round face, dark complexion, fair skin
Scars or Marks:	Scar under chin
English:	Good

Date of Report: 18 January 66
Source: DGI/INT S

SECRET

SECRET
JIB(CAN) 1/66

XIV. U.S.S.R.

SHIPPING - Electronic Reports
BALACHIKHA at Halifax, 13 Jan 66

1. The Soviet mership BALACHIKHA was inspected at Halifax 13 January 1966. Her callsign is UNNW; port of registry, Odessa; owners, Black Sea Steamship Line; tonnage, 11,205 gross and 5,275 net; 2 radio operators carried; safety radio certificate expires October 1966.

Date of Report: 8 Feb 66
Source: DGI/INT S

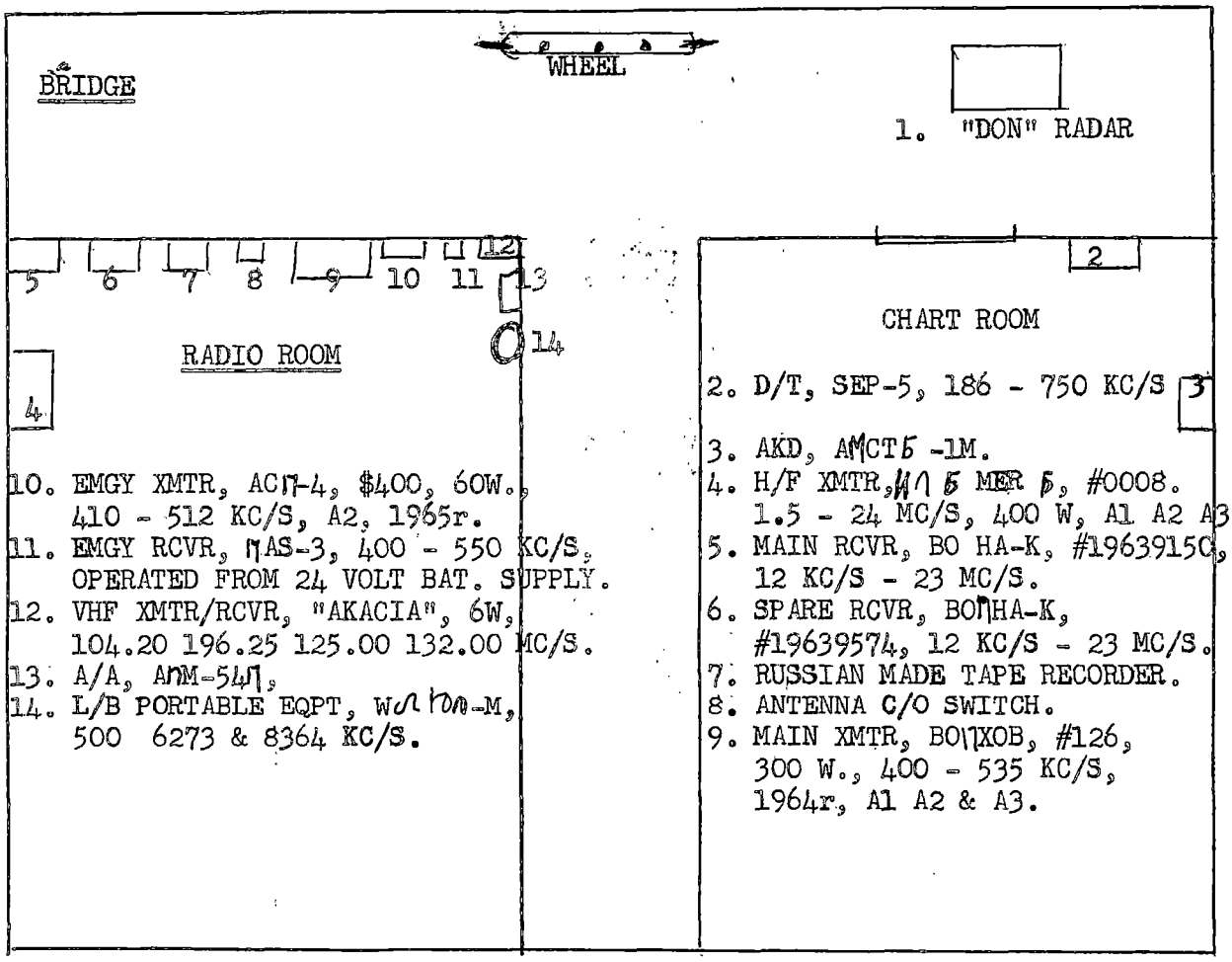

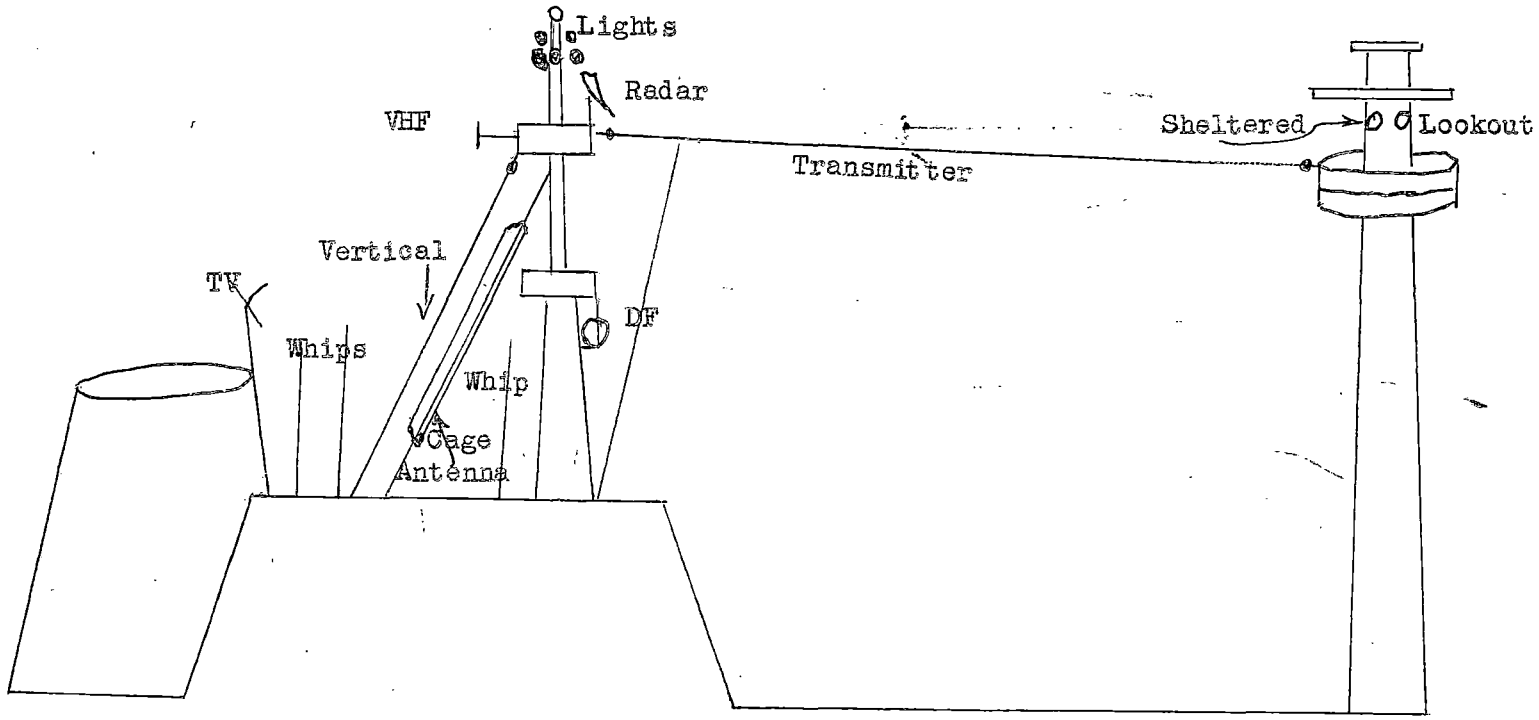

BALCHIKHA at Halifax - VISUAL INSPECTION ANTENNA SYSTEM

SECRET

SECRET
JIB (CAN) 1/66

SECRET
JIB(CAN)1/66

XV. U.S.S.R.

SHIPPING - Electronic Reports
Mership KRASNOZAVORSK, Halifax
18 January 1966

1. The Soviet mership KRASNOZAVORSK was inspected in Halifax 18 Jan 1966. Her callsign is ULBH; port of registry, Leningrad; owners, USSR; tonnage 9235 gross; and 5158 net; two radio operators carried; safety radio certificate expires 26 October 1966,

2. Master and radio operators were ashore during inspection. First Officer supplied list of radio equipment carried as shown on ship's papers (radio room was locked).

Date of Report: January 1966
Source: DGI/INT S

VISUAL INSPECTION OF ANTENNA SYSTEM

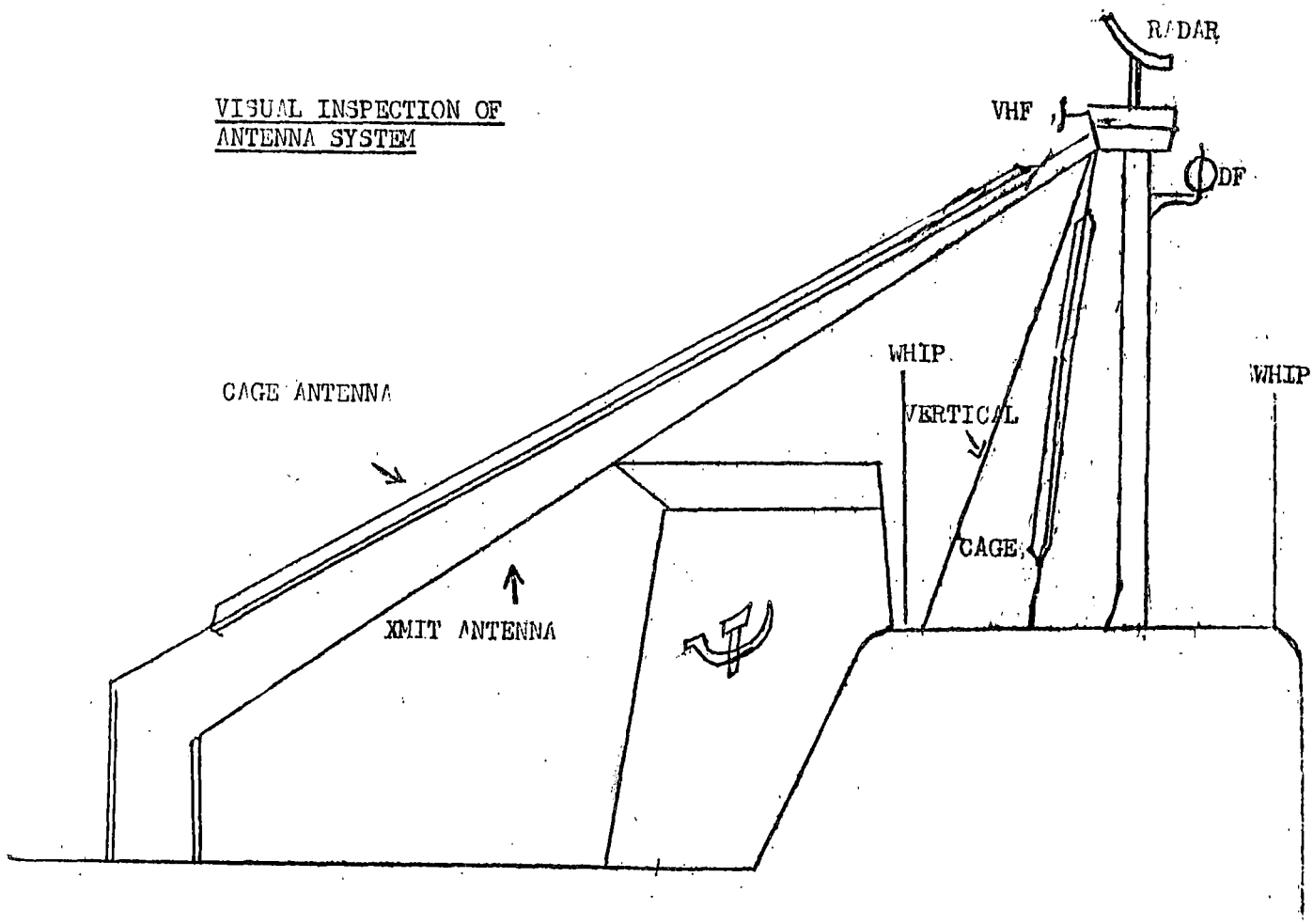

(KRASNOZAVORSK Electronic report, 18 Jan 66)

SECRET
JIB(CAN) 1/66

List of radio equipment as shown on ship's papers:

Main transmitter, БПЕСНА СВ 365-550 Kc/s, 250 watts, A1 A2

H/F transmitter, БПЕСНА КВМ, 2840-22720 Kc/s, 250 watts, A1 A2 and A3

Emergency transmitter, АСП, (АСп-4) 60 watts, A2, 24 V battery supply

Main receiver, ВОПНА-К, 12 Kc/s - 23 Mc/s

H/F receiver, same as main

Emergency receiver, П АС-2, 380-600 Kc/s, 24 V battery supply

D/F, German made "PLATH", 240-535 Kc/s

L/B portable radio equipment, WЛНОПМ, 500 6273 & 8364 Kc/s

Auto alarm, АПМ-1М

Automatic keying device, АПСТБ-1М

Radar, "DON"

VHF, Swedish made "STORNO".

SECRET

SECRET
JIB(CAN)1/66

XVI. U.S.S.R.

SHIPPING - Electronic Reports
Soviet mership VELIKY USTIUG
Halifax, 15 December 65

1. The Soviet mership VELIKY USTIUG was esamined in Halifax 15 December 1965. Her port of registry is Leningrad; owners, USSR; callsign UKXA; official number 27623; gross tons 9436.61.

Date of Report: 15 Dec 65
Source: DGI/INT S

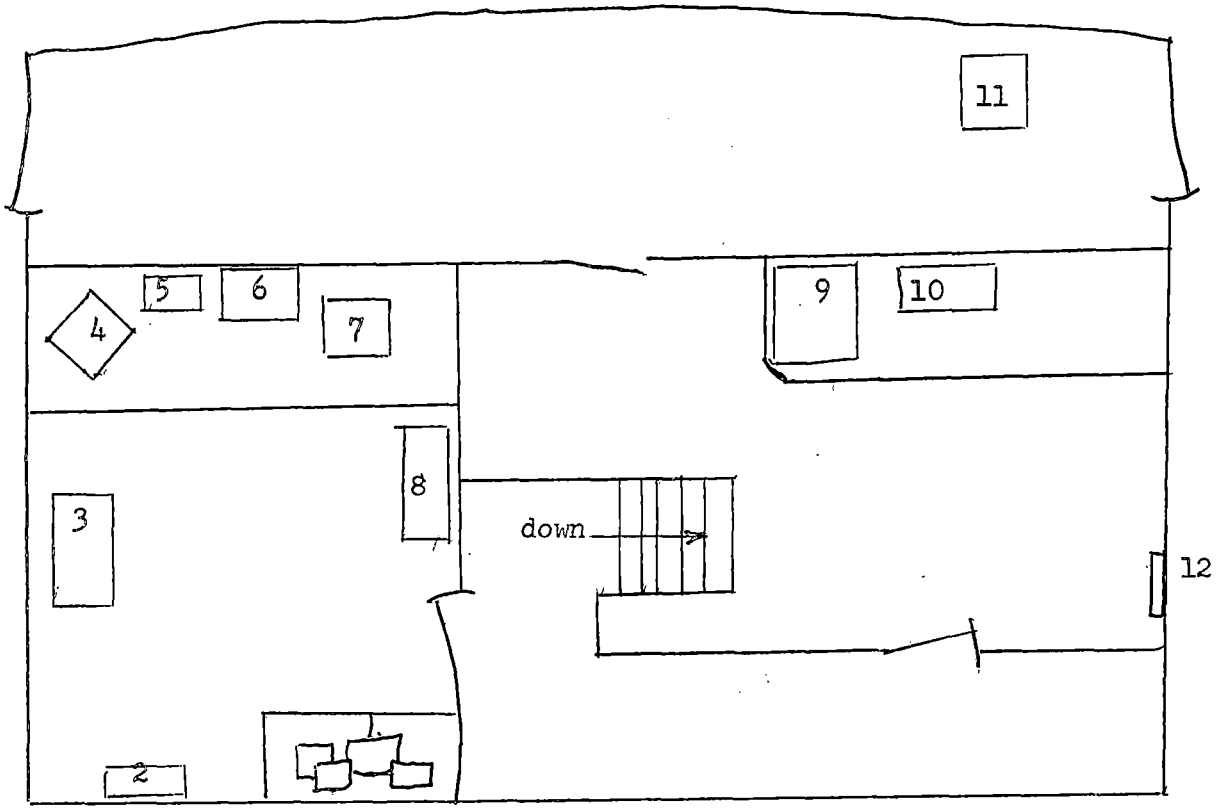

(1) VHF transmitter and receiver, power supply and control unit, make not shown; type AM 25W AnAuu9.

(cont'd)

SECRET

(Soviet mership VELIKY USTIUG)

SECRET
JIB(CAN)1/66

2. Automatic alarm, make not shown. Type AnM-54

3. Main transmitter, make CYAOBOnEPEAAТyПK; Type BOnXOB CB, 400-535 Kc/s 300W, A, A2

4. Spare receiver, make CAEnAHO B CCCP. Type BOnHA-K, 12 Kc/s-23 Mc/s. No. 196412314

5. Emergency receiver, make CABnAHO B CCCP MM? CCCP. Type nAC-3. 380-600 Kc/s M 497

6. Emergency transmitter, make PAAПOnEPEAATyПK. Type ACn-4, 410-512 Kc/s, 60W. A2

7. Main receiver, make & type same as spare receiver with serial no. 196414443

8. Short wave and radiotelephone transmitter, make CYAOBOnEPEAATyПK. Type nbME- - LB. 1500-24000 Kc/s, 400W. A.1

9. Repeater fpr #11 radar, make not shown. TypeAOH, N 60272

10. Direction finder, make not shown. Type CBn-5 186-750 Kc/s

11. Radar, make not shown. Type nA, called DONETS in English

12. Automatic keying device, make not shown. Type AnCTb - 1M, No.1320

One radio operator

Customs advise valid safety certificate carried

SECRET

(Soviet vessel VELIKY USTIUG)

SECRET
JIB(CAN)1/66

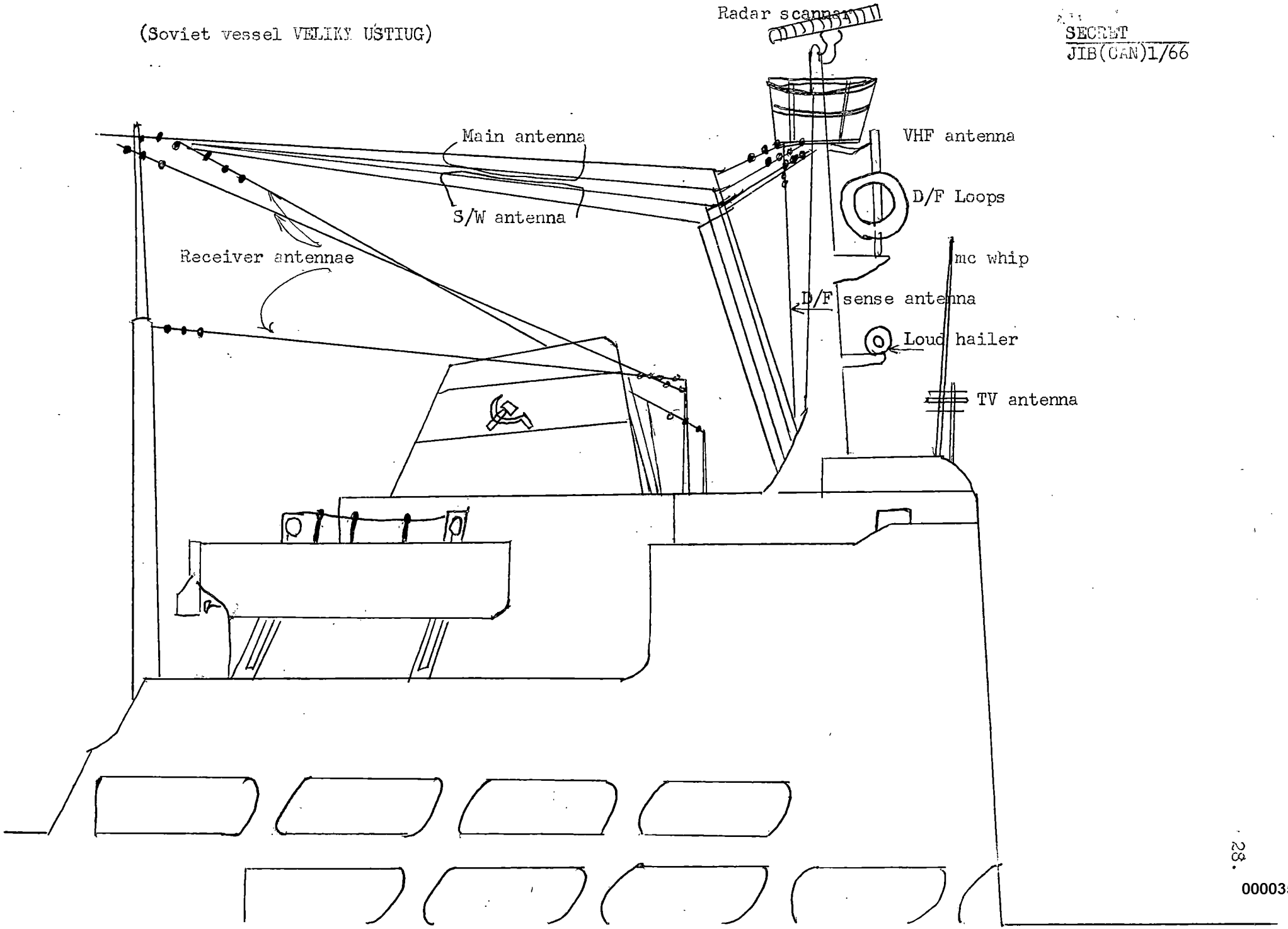

J/B/CAN FOLDER

CONFIDENTIAL

Copy No 85

JIB(CAN) ~~2/66~~ (Supplement 1)

DATE ~~December 1965~~

JOINT INTELLIGENCE BUREAU
Ottawa

EXTRACTS FROM THE SOVIET PRESS

ON THE SOVIET NORTH

Karal'skaya

JOINT INTELLIGENCE BUREAU

Department of National Defence

OTTAWA, CANADA

DISTRIBUTION

External Affairs (D.L. 2)	1 - 2
DGI (DIA, 21) (NSA via DIA, 4)	3 - 45
DGI/DSTI	46
CBNRC (Library)	47 - 52
DIS via JIB(O)LO(L)	53 - 57
FORD via JIB(O)LO(L)	58
JIB(A)	59
CIA	60 - 74
NDC	75
INR (State Dept)	76 - 77
JIB(O)LO(W)	78
JIB(O)	79
Mr. G. Gilbert (DAR)	80
DGP - D. Continental Plans Attention Maj. Beament	81
Mr. M. Iswolsky	82 - 83
Miss M.S. Fleming	84
File	85
Spares	86 - 90

CONFIDENTIAL

K A R E L ' S K A Y A

A.S.S.R.

INTRODUCTION

The Karel'skaya ASSR is located in the northwestern sector of the USSR and borders on the west with Finland, on the south with the Leningrad and Vologodsk Oblasts', on the north with the Murmansk Oblast' and on the east with the Archangel Oblast' and the White Sea. It is situated between the 66th degrees 39 minutes and 60 degrees and 41 minutes parallels of latitude on the routes between the Baltic Sea on the one hand and the White and Barents Seas on the other. Its greatest length is from south to north for a distance of 672 kilometers and its breadth from west to east at the parallel of the city of Kem' is 324 kilometers. The area of the Republic is 173.3 thousand sq. km.

Hydroelectric resources are being utilized in the northern sector of the Republic, a new industry, the aluminum industry has grown up. The central sector is becoming the new industrial base of the Republic.

The construction of a railroad from Belomorsk to Obozerskaya has connected the Karel'skaya ASSR more closely with Archangel and other Oblast's of the RSFSR. The Republic is connected with the Barents Sea by a sea route through the White Sea and by the Kirovsk railroad.

The proximity of the White and Barents Seas influence the economic specialization of the northern sector of the Republic and the way in which sea fishing, timber export and sea transport are being developed.

The following traits are characteristic of the current economic profile of the Republic:

1. The great predominance of industry over the rural economy; the ratio of industrial products gross output of industrial and rural economies came to 80% in 1940, while at the present time it is even higher;

2. The high ratio in theindustrial complex of extracting industries (logging, extracting non-ore minerals, commercial fishing), wherein an increasingly important part of the extracted raw materials are processed within the Republic (production of saw-timbers, prefabricated houses, cellulose paper and other wares, processing of mica and pegmatite, etc.);

3. Subsidiary and auxiliary industries have grown up to serve the leading branch of the national economy, which is logging (production of timber transporting equipment, metalworking for repair of logging equipment, etc.). Similar subsidiary enterprises have grown up in connection with the needs of other basic branches of the national economy (fishing, water transport). Some of these, such as the shipbuilding, tractor building for the logging industry enterprises, are being converted into main branches of industry in the Republic;

4. Industrial combines are growing up, the largest establishments in the Republic are embracing all stages of processing from acquisition of raw material to the release of the finished product (for example, the Segezha cellulose-paper kombinat acquires the pulpwood and turns out craft paper bags) and the utilization of leftovers from the main product (for example, at this same Segezha kombinat there is a hydrolysis plant);

5. Industries requiring large amounts of energy (aluminum and electro-smelting fire brick) have arisen and have been developed on the basis of utilization of large reserves of hydroelectric energy and the processing of local raw material as well as raw material from neighbouring raions;

6. The predominance of cattle and vegetable specialties in the rural economy, this is in keeping with the natural conditions in the territory and the large ratio of urban population; however the level of agricultural development is still far from adequate.

Good prospects are being opened up for the Republic in the sixth five-year plan. The Directives of the Twentieth Meeting of the Communist Party of the Soviet Union (CPSU) in the sixth five-year plan for development of the national economy of the USSR and Kareliya foresee a great development in socialistic building. The Republic's most important national economy tasks are:

1. Further development of timber, paper and wood processing industries;

2. The conquest of new forest tracts, particularly in the western regions of the territory bordering on the east with Lake Onega;

3. Reconstruction of the largest cellulose-paper kimbinats and building of new wood-processing enterprises on the basis of recovered forest tracts;

4. Development of construction and utilization of new hydroelectric power stations, including the northern regions;

5. Expansion of industries requiring electrical energy;

6. Development of transportation in the western regions.

Other branches of the national economy of the Republic also have great tasks in store for them, these branches have favorable natural and economic conditions for their development (fishing and mining industries). The new five-year plan foresees an extention of the agricultural areas and the consolidation of an independent foodstuffs base for the Republic.

The growth of the national economy in Kareliya during the sixth five-year plan is associated with the more rational and complex utilization of its natural resources. The Republic's economy will receive a more clear-cut specialization in the system of country-wide division of work.

INDUSTRY

The fundamental changes in the industrial development of Kareliya are characterized by the growth in the gross product of its industry, which, in comparison with 1913, had increased by 10.5 times by 1940, while in 1959, in comparison with 1940, it had increased by 22 times. Heavy industry predominates in the Republic.

The industry structure of the Republic was noticeably changed during the prewar years, and in the postwar years it underwent even further changes in the direction of increasing the more refined and complex industries. The most significant change came in the ratio of metalworking in the total industrial output from 12.5% in 1940 to 22% in 1950. Those branches associated with logging, mechanical and chemical processing of wood produced about 60% of all industrial output in 1955, about as much as was produced in 1940 produced only about 1/4 of the total output for the branches of industry associated with the preparation and processing of wood, increased its index to more than 36% in 1955.

Electrical energy production is one of the fastest growing branches of industry in the Republic. The utilization of new electric power stations has resulted in the development of energy consuming industries such as the aluminum industry. In addition, production of electro-smelting fire brick is being organized at the Kondopoga plant. In the postwar years the hydrolysis industry and prefabricated housing industry have been established, there is a considerable expansion of the furniture industry and shipbuilding is being developed.

The utilization of side products of the cellulose and sawmill industries, the organization of housing enterprises and the creation of large sawmills, prefabricated housing shops, shops turning out building parts, wood fiberwood, boxwood and other wares is an indication of more intelligent use of timber and the strengthening of combines in the Republic's main branch of industry.

The bulk of the industrial products are turned out by establishments which were set up during the years of Soviet rule, this amounts to about 90%. The majority of these are establishments which are under Soviet and Republic control, this is evidence of the great importance of the Republic in the All-Union division of labor, but at the same time it is an indicator of the comparatively unsatisfactory development of local industry.

The processing industry operates mainly on local materials. However, some types of raw material and semi-fabrics continued to be imported, this applies to the import of ferrous and non-ferrous metals, wool, cottons for sewing, etc.

The construction of industrial enterprises has changed the geographic distribution of industry in the Karel'skaya ASSR. New enterprises are being created in the northern and other sectors of the Republic as well as in the southern and central sectors. Large (on the scale of industrial development in the Republic) industrial centers have sprung up and are growing at the most suitable transportation points, drawing raw materials from an extensive territory, also, these points have the necessary sources of energy. This is also the case in the more densely populated sectors of the Republic (Petrozavodsk, Kondopoga and Segezha).

Among the medium sized, on the Republic's scale, industrial centers are Pitkyaranta, Lyaskelya, Sortavala, Vyartsilya, Medvezh'egorsk, Pindyshi, Belomorsk, Kem', Letnerechenskiy, etc. Of the smaller industrial points are the many regional centers (Pudozh, Olonets, and others), the timber cutting points distributed throughout the various sectors of the Republic and the lumbering settlements situated near these, was well as the mining settlements (Ropruchey, in the Prionezshskiy raion, Khetolambina in the Loukhskiy raion and others).

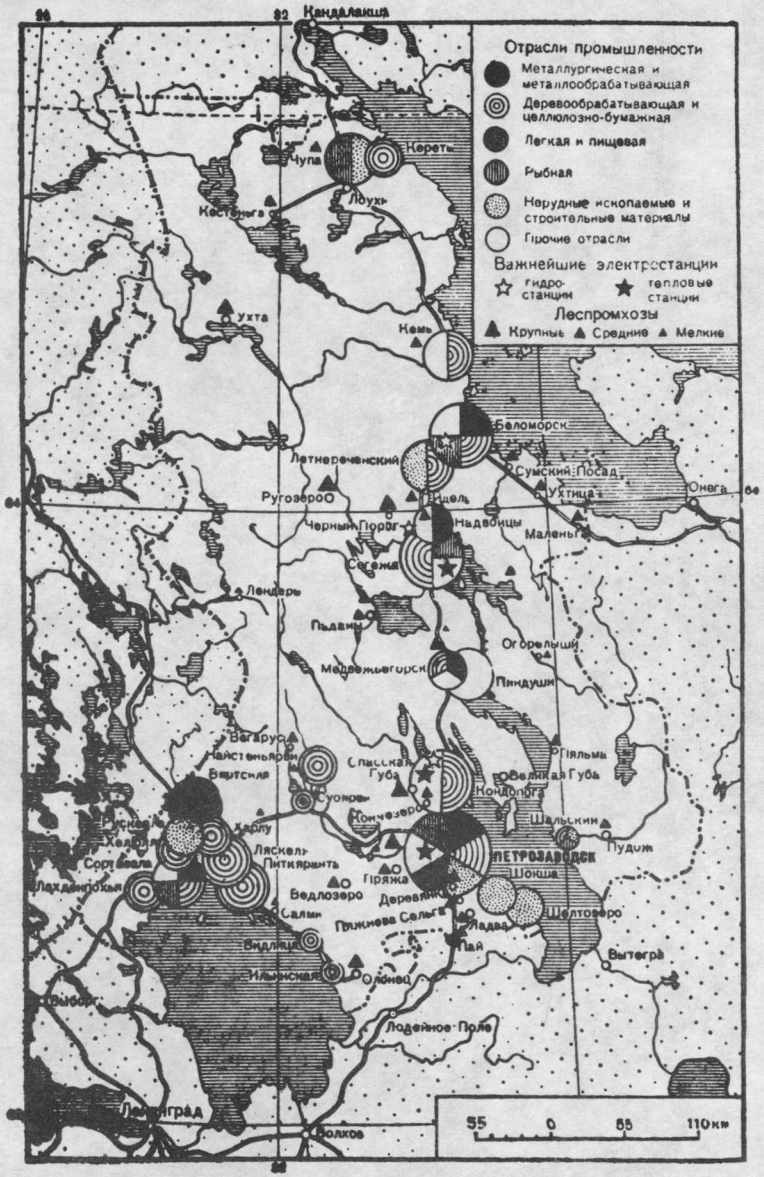

DISTRIBUTION OF INDUSTRY

Branches of Industry:

- Metallurgy & Metal-working
- Wood-working & Cellulose-paper
- Light & Food Industries
- Fishing
- Non-ore Minerals & Building Materials
- Other Industries

Larger Power Stations:

- Hydro-Electric
- Thermal-Electric

Lespromkhozes:

- Large
- Medium
- Small

The years of the five-year plans were a period of increased rate of growth in the national economy for the Republic. A high rate of growth of industry is planned also for the sixth five-year plan, by 1960 the total industrial output will have increased by 1.6 times, which is almost that of the rate of growth of industry for all of the Soviet Union. Energy, wood processing and paper industries will develop at an even faster rate. A new branch of skilled industry is being set up in the Republic, this is tractor-building. The construction of large and medium-sized hydroelectric power stations is being expanded, including the northern raison; there will be a considerable increase (1.6 times) in the production of aluminum. A number of new wood-processing and woodworking enterprises are being organized in western Kareliya, in the Pudozhskiy and other raions; a new carton factory is being erected etc. One and seven tenths billion rubles are being invested in the main branch of the Republic's industry which is forestry (including wood processing and paper production), i.e., 65% more than in the previous five-year plan.

In connection with this there will be an even greater change in the structure and distribution of industry, there will be a considerable increase in inter-raion and intra-Republic ties and ties of the Karel'skaya with other Oblast's of the Soviet Union.

All enterprises are progressing to production of more complex products and the leading branches in industry and construction are going further in providing all the intra-Republic needs for their products.

THE ENERGY ECONOMY

The present energy economy of the Karel'skaya ASSR is based mainly on the utilization of hydroelectric resources, mineral fuel brought in over a great distance, and local wood fuel. A considerable part of the energy resources of the Republic are dependent on reserves of "white coal". The hydroelectric resources amount to about 153 thousand kilowatts (i.e., up to 9 kilowatts per sq. km.) with the possible yearly production of electrical energy of about 13.4 billion kilowatt hours. In recent years the level of utilization of hydro-electric resources has increased considerably and these have become the basic source of power in Kareliya.

The total production of electrical energy in the Republic has increased in 1955, in comparison with 1940, by nearly 5.5 times and amounts to about 1500 kilowatt hours per person (for the Soviet Union this index is about 850 kilowatt hours).

In connection with the favorable natural conditions for utilization of rivers as sources of electrical energy the Republic has relatively low cost electrical energy at comparatively low capital investment. The economic effectiveness of hydroelectric power stations is exceptionally high. Indications are that the electric power stations in Kareliya occupy second place amongst the regions of the USSR following Eastern Siberia (104). Nearly 40% of all hydro power resources in the Republic are located along three rivers, these are the Kem'; Kovdu and the lower Vyg. Of the other rivers which are distinguished for their power are the Shuya (Onega), Vodla and Suna.

Construction of hydroelectric power stations was concentrated in the southern sector of the Republic during the prewar period. The first to attract attention was the Suno-Sandal'skiy Basin, which unites the Lakes Sandal, Synozero, Pal'ozero and others and the rivers Suna, Tivdiya etc.

There were projects for utilization of the energy resources of this region even prior to the October Revolution, however, construction of hydro power stations began only during the Soviet period. In 1928 the first stage of the Kondopoga hydroelectric power station was completed, while in the third five-year period work was completed on the second stage. The Kondopoga power station is the first and most powerful electric power station in the Republic, it is the main source of energy for the Kondopoga industrial hub and Petrozavodsk, with which it is united by a 60-kilometer long high-tension line. The Lososinka river is also used as a source of energy for Petrozavodsk.

Construction of larger electrical power stations was undertaken in the central and northern sectors of Kareliya during the postwar period.

Construction of the White Sea-Baltic canal created exceptionally favorable conditions for the erection of a cascade of comparatively large hydro-electric power stations. Lake Vygozero, which was elevated by the Nadvoitskaya Dam and initially had been only a boat waterway, began to function as an energy-water reservoir as well. In addition, it is proposed to utilize Lake Segozero and the Segezha River flowing out of it for energy purposes.

The Matkozhenskaya and Ondskaya power stations are now in operation, these are located in an important part of the Republic between the cities of Segezha and Belomorsk. These stations supply power to the Kirovsk railroad and to industry in the Segezha and Belomorsk raions. The largest electrical energy hub in the Republic is being built up here along with the appropriate industries.

In the southern sector, building of hydroelectric power stations is continuing in the Suno-Sandal'skiy Basin. The Pal'ezerskaya power station has been built on the Suna river, on this same river the Pal'e-Sandalskaya power station and the Valazminskaya power station, with a water reservoir having a volume of 1 billion cubic meters, will be built during the sixth five-year plan. This will ensure long-term regulation of the cascade of Suna power stations and will increase the output of electrical energy.

An important energy hub must be created in the future on the Vodla river and the eastern Prionezh'ya in the southern sector of the Republic, these have great prospects for industrial development.

Construction of hydroelectric power stations was begun in the north as well during the postwar period (in the border sectors of the Murmansk Oblast' and Karel'iya) along the Kovda river which has a number of large lakes in its basin (Topozero, Pyaozero and others). In 1955, the Knyazhegubskaya power station on the Kovda river was put into partial operation.

The Kumskaya power station is being built on the upper reaches of the Kovda river, it will be put into operation during the sixth five-year plan and construction of the Iovskaya power station (80 thousand kilowatts) will be undertaken. The construction of these power plants is necessary in order to

strengthen the Kil'skaya energy system. The great Topo-Pyaozerskoye reservoir will be created with the construction of these power plants. The hydroelectric power station cascades on the Kovda river are the link uniting the energy system of the northern sector of the Republic with that of the Murmansk Oblast'.

It is planned to construct a cascade of hydroelectric power stations on the Kem' river, the largest river in the Republic, in the more distant future.

During the sixth five-year period the capacity of the hydroelectric power stations in the Republic will be increased by 200 thousand kilowatts.

In conjunction with the construction of hydroelectric power stations there will be an increase in the size of thermal power stations and central heating systems at the cellulose-paper kombinats, these require heat for their technical processes. However, hydro power stations will occupy the leading position in the electrical energy economy of the future. At the present time hydro power stations make up 55% of all available capacity for electrical energy production in the Republic, while in the future the ratio will be increased considerably. The largest thermal stations in Karel'iya are those at the Kondopoga and Segezha cellulose-paper kombinats and at the cellulose plant "Pitkyaranta".

The large thermal and hydro power stations must be combined in the future into several electrical energy systems, while in the more distant future they must comprise a single energy system for the Republic, united with the energy systems of the Murmansk Oblast' and with Leningrad. During the sixth five-year plan it is projected that construction of high voltage transmission lines will be undertaken from Vygostrov to Belomorsk to Kem', from the Ondskaya power station to Medvezh'egorsk to Kondopoga as well as uniting the hydro power stations of the Leningrad Oblast' at Verkhne-Svirskaya with Petrozavodsk and Raukhiala (on the Vuoksa river) with Sortavala.

Small power stations have been widely developed in conjunction with the larger power stations. Small stations are being built (hydro and thermal) which supply energy to towns and settlements, bush camps, local industry and kilkhozes. Most of the small power stations are concentrated in the southern sector of the Republic.

The main position in the fuel balance for the Republic is occupied by the fuel brought in from a distance (hard coal and liquid fuels), since the main enterprises have all been placed on mineral fuels. Imported fuel makes up about 60% of all fuel requirements. Low calorific value and distance of hauling result in high costs of imported coal (up to 330 rubles per ton F.O.B. Petrozavodsk).

In the interest of further economic development in the Republic it is necessary to alter the structure of the fuel balance by means of partial replacement of imported and wood fuels with peat.

The total reserves of peat in the Karel'skaya ASSR are quite considerable and make up about 4.8 billion tons of air-dried peat from a usable area of peat bogs of about 2.5 million hectares. The thermal properties of peat are fully adequate in most cases.

An analysis of long-term hydro-meteorological observations (temperature, precipitation, relative humidity of the air) during the period May to August and technical-economic estimates made by the Karel'skaya Division of the Academy of Sciences USSR show the possibility of extracting peat in the Republic. By way of a first approximation it may be assumed that the length of the season for cutting peat on the latitude of Petrozavodsk is 80 days, while at the latitude of Kem' it is 65 to 70 days. In comparison it will be stated that in the Leningrad Oblast' the peat cutting season lasts for 90 days on the average.

Several groups of peat bogs in the Republic may be considered as potential sites on which to build large electric power stations in the future. It is possible to utilize peat bogs in the southern sector for the setting up of a peat-chemical industry in the future. However, it must be borne in mind that the development of the peat riches of the Republic represent a great requirement in labor resources and considerable capital investment.

The replacement of industrial thermal processes and the heating system in Petrozavodsk with electrical processes and the electrification of the railroads could be of great significance to the energy economy of the Republic.

THE TIMBER AND PAPER INDUSTRY

The timber and cellulose-paper industry is the leading branch of industry in the Karel'skaya ASSR and the most important basis for industrialization.

The products of the timber and cellulose-paper industries amounted to 60% of the total industrial output of the Republic in 1956, this included: logging industry, 26%; cellulose-paper industry 22.5%; sawmill products and wood processing, 11.5%.

The ratio of the Karel'skaya ASSR in the nationwide production of timber and paper products amounts to: logging 4%; cellulose-paper products up to 10%; sawmill and woodworking products up to 3%.

The Karel'skaya ASSR is an important region for production of pulpwood, saw-logs, sleepers and saw timbers as well as newsprint, wrapping and other types of paper, paper tare, cartons, veneer, various types of furniture, parts for prefabricated wooden houses and other products of woodworking. The Republic has the highest ratio in the nationwide production of paper tare, newsprint and parts for prefabricated houses.

Timber products make up about 90% of water-borne freight and predominate in the railroad shipments of the Republic.

The Karel'skaya ASSR is one of the most important northern regions into which logging operations are being transferred from the poorly forested regions. Most of the forests in the territory are mature and overmature with little-used reserves of timber, these ensure a high volume of lumber output. Timber reserves

under exploitation amount to 800 million cubic meters in addition to which there are ready reserves of about 710 million cubic meters. The Karel'skaya ASSR forest reserves make up about 2% of the total timber reserves of the USSR and about 8% of the European sector reserves. The Republic contains about 64% of the timber reserves in the northwestern USSR and the Baltic area. Thus, Karel'iya is the main source of supply of timber materials to the northwestern, Baltic and some other regions of European USSR.

The Kirovsk railroad, Lakes Ladoga and Onega, the White Sea-Baltic Canal and the White Sea ports ensure direct transfer of timber products along a comparatively short route to the northwestern and central regions of the USSR.

The Karel'skaya ASSR is the main source of supply of timber materials to the Leningrad industrial hub, it is the source of wood for the cellulose-paper industry located both within the borders of the Republic and beyond, it occupies an important place in the supply of shoring-timbers to the Podmoskovskiy and Donets coal basins. The Republic's forests serve as an important source of saw timbers which are used as a product in the internal market and for export.

A high standard of logging is required in the Karel'skaya ASSR for the purpose of fulfilling the task of supplying timber to the national economy in accordance with its forest riches, there must be complete and intelligent utilization of timber reserves with maximum realization of usable varieties and finished timber products. These tasks determine the character of utilization of the main types of forest stands available and the variety of finished products.

It is necessary to make maximum use of spruce wood for pulpwood in order to provide the cellulose-paper industry with raw material. The reserves of spruce are concentrated mainly in the southern sector of the Republic.

The timber stands of the Republic serve as a raw material base for a large scale sawmilling and woodworking industry, while the small diameter material ensures the further development of the cellulose-paper industry in the Republic and meets the requirement for shoring-timbers at the Podmoskovskiy and Donbas coal basins.

Wood of the deciduous forest stands, mainly birch, serves as a raw materials base for the ski and furniture industries and the veneer industry in the Republic.

FOREST ECONOMY RAIONS

Individual sectors of the Karel'skaya ASSR are differentiated by their tasks in providing timber materials for the national economy and by the level and nature of development of the timber and paper industries.

Nine timber economy raions are recognized, these are:

Ladozhskiy
Zapadno-Onezhskiy
Pudozhskiy
Zheleznodorozhno-Svirskiy
Segezhskiy
Belomorskiy
Kemskiy
Severnyy
Zapadno-Karel'skiy

Each forest economy raion includes forest tracts which are united by transportation routes and delivery of timber and have sufficient reserves to ensure long-term supply to their consumers. A forest economy raion is that area of utilized forest on which logging operations may be conducted over a planned period and which have a sufficient reserve to meet the needs of the consumers in timber.

The Ladozhskiy raion combines those forest which are situated along the basins of small rivers flowing into Lake Ladoga; timber from here is delivered for processing to the enterprises situated along the lake-shore.

The main usable timber reserves of the raion are concentrated in its south-eastern sector, in the basins of the Olonka, the Tuloksa, the Vidlitsa and the Tulema rivers. In the north-western sector of the raion, in the territory which came into the USSR in 1940, the forests have been heavily overcut and most of the ready reserves have already been used up.

The Zapadno-Onezhskiy raion includes the forests in the western and north-western parts of the Lake Onega basin along the rivers Shua, Suna, Lizhma, Unitsa, Kumsa and along the Povenetskaya Guba. These stands comprise the entire raw materials base for the Kondopoga cellulose-paper kombinat and all the industrial region of this part of the Republic centered on Petropavlovsk, Kondopoga and Medvezh'egorsk which use and process the bulk of the timber cut in this raion.

The Pudozhskiy raion contains the largest and most productive forests in the Republic along the Vodla river basin. This raion is an important supplier to the timber industry in the Leningrad area, while in recent years it has become a supplier of spruce pulpwood to the cellulose-paper enterprises in the Baltic area. All the timber cut is delivered by floating to the estuary of the Vodla river, where part of the saw timbers are sawn up; the bulk of the timber is directed across Lake Onega and down the Svir' river to Leningrad and to the cellulose-paper enterprises in the Baltic area.

The Zheleznodopozhno-Svirskiy raion contains small forest tracts bordering on the Leningrad Oblast'; timber from here is moved along the Svir' river and the railroad southward from Petrozavodsk (Derevyanka, Pyzhieva Sel'ga, Ladva and Pay). The raion produces mainly spruce timber, the bulk of which is delivered by railraod to the cellulose-paper enterprises of the Karel'skiy isthmus.

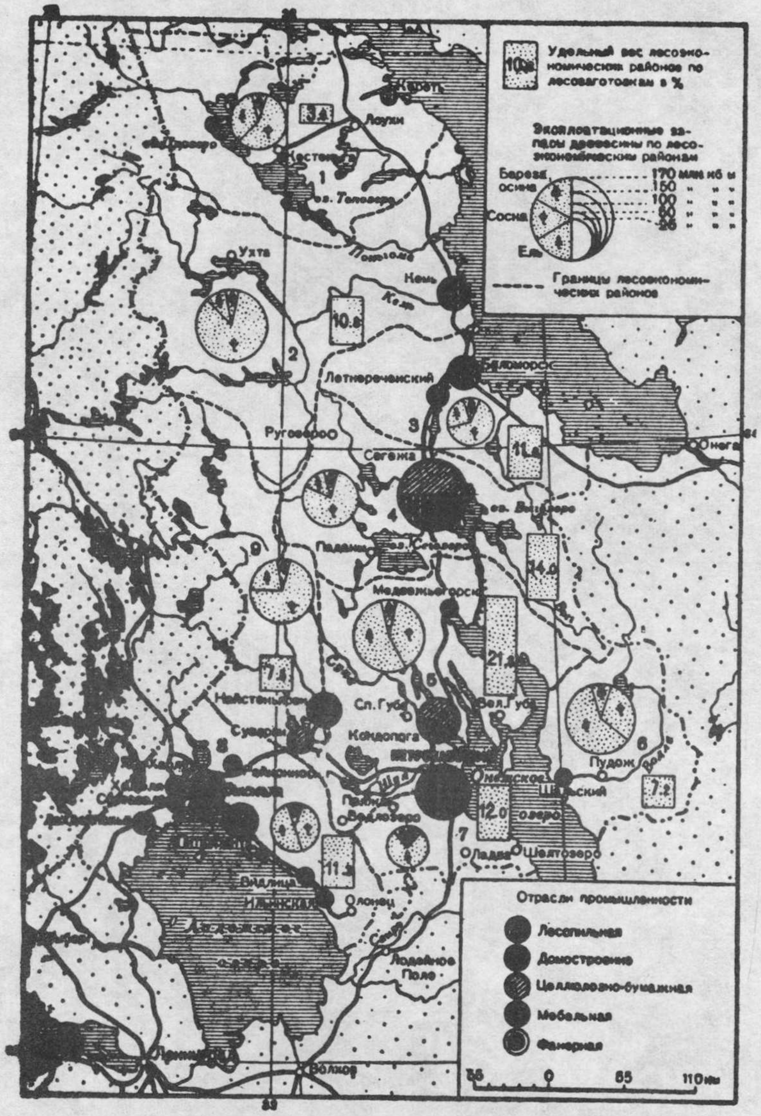

Distribution of Timber Resources, Logging and Wood-Processing Industries

1. Severnyy
2. Kemskiy
3. Belomorskiy
4. Segezhskiy
5. Zapadno-Onezhskiy
6. Pudozhskiy
7. Zhelezhnodorozhno-Svirskiy
8. Ladozhskiy
9. Zapadno-Karel'skiy

LEGEND

▨ Ratio of Timber cut in Raion, in percentage

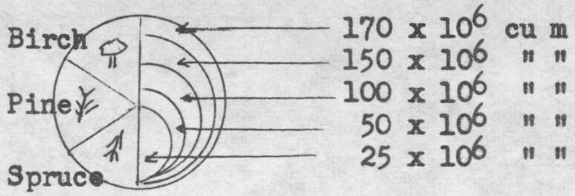

— — — — Boundaries of Forestry raions

Branches of Industry

⦶ — Sawing

⊗ — House Construction

⊘ — Cellulose-Paper

● — Furniture

◉ — Veneer

The Segezhskiy raion includes the forests of the Vyg river basin (along the upper Verkhnyy Vyg, Vygozero, Segozero and Ondozero), these make up the raw materials base for the Republic's largest cellulose-paper kombinat at Segezha and the prefab housing kombinat in the same town; the bulk of the timber is delivered to the town of Segezha. The settlement at Nadvoitsa is also an important consumer of timber in this raion, the settlement is growing into a town.

The Belomorskiy raion combines the forests located in the White Sea-Baltic Canal basin as well as those gravitating towards the railroad line from Belomorsk to Obozerskaya (within the borders of the Republic); much of the timber processed in situ is delivered to the city of Belomorsk.

The Kemskiy raion takes in the extensive forests situated in the Kem' river basin, most of the timber cut is delivered to the city of Kem' for processing. This raion also includes the basins of the small rivers flowing into the White Sea near the Kem' river (Pon'gomy; Kuzemy, Letney and others).

The Severnyy raion combines the forests situated in the area of the large lakes in the Kovda river basin of the River and Lake Keret', as well as those in the zone of Chupinskaya Guba and other sectors of the White Sea/coast in the Loukhi administrative raion. Transportation services to the logging operations in the central, most extensive sector of this raion are concentrated in the zone of the large lakes and in the Keret' river basin, these services are are provided by the Kesten'gsk railroad branch. The main delivery points for timber on this branch are also the centers for timber processing in the raion. Timber is delivered from the small centers along the Kirovskaya railroad (settlements of Engozero, Ambarnyy and Chupa) and to the Keret'skiy lumber mill, from the south-western sector of the Severnyy raion adjacent to the Kirovskiy railroad, the Chupinskaya Guba and other sectors of the White Sea. The forests in the Tumcha river basin make up the north-western part of the raion from which timber is delivered to the Knyazh'ya Guba (Kandalakshskiy raion of the Murmansk Oblast') and the railroad line from Ruch'ya to Alakurtta.

The Zapadno-Karel'skiy raion includes the forests of the basin on the upper Shua (basins of Lake Suoyarvi and the Irata river), the upper Suna (up to the settlement of Porosozero), and the Reboly forests. Most of the timber cut here is shipped out by railroad to the city of Suyoarvi and the Karel'skiy isthmus. Main delivery points and timber processing points within the raion are Suyoarvi, the settlements of Porosozero, Lendera and the adjacent smaller points.

The forest industry raions of the Karel'skaya ASSR differ from one another considerably in their assessment indices (their reserves per hectare, species composition and maturity), and in the level of development of the timber and paper industries.

The assessment indices for the forests in these raions are characterized by the data given in the Table on the following page. The distribution of timber species in the territory of the Republic follows this rule: Pine predominates in the central sector and in the Kem' river basin, its ratio reaches 70 to 80% of all reserves. The ratio of spruce increases somewhat in the Severnyy raion (up to 30%). In the southern regions the ratio of spruce is greater than that

of pine, while in such forest economy raions as Zheleznodorozhno-Svirskiy, Pudozhskiy and partially Ladozhskiy, spruce predominates and amounts to as much as 75% of the total reserves. There are considerable reserves of deciduous species (mainly birch) in the southern regions of the Republic, of these the most important are the reserves in the Ladozskiy and Zapadno-Onezhskiy raions, where the transportation conditions and a plenitude of big customers permits widespread cutting and preparation of usable grades of birch wood at the present time.

Table I

ASSESSED INDICES OF FORESTS, BY RAIONS

Forest Industry Raions	Average Timber Reserve Per Hectare (m^3)	Ratio of Main Species in Timber Reserves (%)			Ratio of Mature Stands in the Total Forested Areas (%)			
		Pine	Spruce	Birch & Aspen	Young Growth	Semi-Mature	Mature	Mature Old
Severnyy	78	64.5	30.3	5.2	0.9	6.8	4.8	87.5
Kemiskiy	99	82.7	13.2	4.1	1.3	7.3	7.7	83.7
Belomorskiy	123	67.7	27.5	4.8	1.2	5.4	7.5	85.9
Segeznskiy	118	77.3	20.3	2.4	7.1	4.1	9.9	78.9
Zapadno-Karel'skiy	126	72.6	22.8	4.6	5.7	11.6	13.1	69.6
Zapadno-Onezhskiy	138	41.5	48.0	10.5	12.6	9.0	11.6	66.8
Pudozhskiy	156	32.9	58.7	8.4	5.7	6.0	5.0	83.3
Zheleznodopozhno-Svirskiy	156	13.8	75.5	10.7	10.2	5.8	11.4	72.6
Ladozhskiy	153	36.7	50.9	12.4	18.2	44.4	11.5	25.9
Average for Kareliya	117	60.2	33.2	6.6	6.2	11.2	8.9	73.7

The woods of the Ladozhskiy forest economy raion are clearly distinguished by their maturity among the forest tracts of the Republic. Whereas there is a general preponderance throughout the Republic of overaged, mature and nearly mature forest stands, in the Ladozhskiy raion there is a preponderance of semi-grown and young forests, particularly in the north-western and in the extreme southern parts. There are considerable areas of young growth and semi-grown forests in the Zapadno-Onezhskiy and Zheleznodorozhno-Svirskiy raions and in the southern part of the Zapadno-Karel'skiy raion (in the vicinity of Suoyarvi). In all the remaining forest economy raions there are relatively small stands of young growth and semi-mature forests, these adjoin the Kirovsk railroad and the White Sea-Baltic Canal.

THE LOGGING INDUSTRY

Logging in Karel'skaya was revived in a short period of time (from 1922 to 1925) and by the beginning of the first five-year plan the level of timber cut had increased by 2.2 times over that of 1913. During the first and second five-year plans the volume of timber cut in the Republic increased by 2.3 times, while in the first two years of the third five-year plan it increased by an additional 36%. In 1940 the volume of timber cut had exceeded the 1913 level by nearly 6 times.

During the fourth five-year plan logging was revived in all regions of the Republic but, in 1950, the volume amounted to no more than 70.4% of the 1940 level. The mechanized enterprises which had been restored and newly-built during the fourth five-year plan had not yet reached full output and were being operated at 55 to 60% of their capacity. New methods had not been sufficiently well developed in the logging industry either. The 1940 level of logging was not exceeded until 1953 when the mechanized establishments were operating at full capacity.

During the years of the five-year plans, logging was converted from a seasonal industry, carried on mainly by manual labor, into a mechanized branch of industry with a permanent work force.

At the beginning of the 1930's the Matrosskaya tractor base and the Vilgovskaya, Lososinskaya and Motorinskaya truck bases were organized for the purpose of mechanizing timber transport. Various types of mechanized logging were evolved during the three five-year plans. Initially, tractor sleigh and truck roads were laid over ice along which timber was hauled out by tractors and trucks. From 1930 to 1936, seasonal roads predominated along which timber was hauled out by tractors. From 1938 on, larger, mechanized logging enterprises were organized on the basis of narrow-gauge railroads using steam and motor engines. The seasonal tractor roads had proved themselves of little use under the conditions in the Republic and were gradually replaced by truck roads. Thus, automobile roads and narrow-gauge railroads open the year round became the main types used by mechanized timber transport. During the same period the main types of prime movers and trailers were developed and taken into use. Mechanized loading of timber was also evolved. The growth in mechanized logging to the year 1940 is characterized by the data given in Table II on the following page.

Sleeper sawing was fully mechanized during the first five-year plan. In 1932 the sleeper sawmills, using 55 sleeper saws, produced about 4 million sleepers (ties). During these years such tasks as mechanization of rafting operations, rafting of timber, retrieval from the water and towing over lakes were expanded.

During the first five-year plan a number of mechanized timber transshipping yards were organized in the Republic (Latushka, Petushki, Velikaya Guba) where, besides mechanized loading and sleeper sawing, there were 28 pulpwood saws in operation cutting cordwood.

TABLE II

GROWTH OF MECHANIZED LOGGING TO 1940

	1932	1937	1940
Mechanized logging in thousands of m^3	157	1877	2970
By tractor, %	61	73.8	21.9
Automobile, %	39	26.2	29.3
Narrow gauge railroad, %	---	---	48.8

During the second and third five-year plans there was a sharp increase in the mechanization of floating operations. During this period the capacity of towing boats in the logging industry increased by more than 2 times while the capacity of rafting and loading rigs increased by more than 1½ times.

However, up to the second World War, cutting and hauling operations had not yet been mechanized. The introduction of better tools and organized transport played a great role in increasing the productivity of labor during the prewar years. In 1939, the frame saw was replaced by the double-ended crosscut saw in all logging operations, this effected a growth in productivity of nearly 1.5 times. During the third five-year plan there was widespread use of rail and sled roads on which horse-drawn double-sided wagons were used for hauling timber.

Decisive successes were achieved in the further mechanization of the logging industry in the postwar years. Since 1946 there has been wide development in the mechanization of felling trees by using light electro-saws and portable electric generators. During the fourth five-year plan the problme of mechanizing transfer of timber using tractor trailers and electric trains was solved, there was also a sharp increase in the mechanization of loading and off-loading and other operations. The number of mechanized enterprises rejuvenated and built up during the fourth five-year plan is considerably greater than the prewar number, while the number of machines and mechanisms increased in comparison with the prewar number by several times. The introduction of electrical limbers into logging operations was begun in 1953.

All these achievements have created the necessary conditions for complete composite mechanization of all processes in logging. In 1955, the standard of mechanization reached 88% in timber cutting, 85% in hauling and 69% in delivery of the total volume of these operations. Loading of timber onto carriers has been nearly 100% mechanized and a high level of mechanization in rafting operations has been provided.

Logging in the Karel'skaya ASSR is approaching complete mechanization, in connection with which there is a sharp increase in energy capacity and demand for electrical energy in this branch of industry. In 1952, portable and privately-owned stationary electric-power generators of the Ministry of Timber Industry produced 18.1 million kilowatt hours of electrical energy, of this, portable generators produced 13 million kilowatt hours; this amounts to about 3 kilowatt hours per cubic meter of cut and delivered timber.

However, the reconstruction of the timber industry must not yet be taken for granted. Although there is a comparatively high level of mechanization in such basic operations as felling, skidding, cutting, loading onto carriers and delivery of timber, such laborious tasks as trimming branches, piling and loading onto railway cars are still poorly mechanized. Such preparatory and auxiliary operations as preparation of felling areas, notching, removal of waste at the log piles and some other operations are only very slightly mechanized.

Together with mechanization there is introduction of newer, more modern technological processes and in particular, the haul-out of timber to the lower yards with the tops on and the transfer to here of the timber cutting operation. This has required a high degree of mechanization at the lower yards with an energy base of greater capacity. Sleeper sawing and other operations are being developed at the lower yards, a system of electrical energy supply to the logging enterprises is being perfected and these are being transferred onto a centralized electrical power supply.

Well-built, central settlements have grown up at the large logging enterprises. The Republic's Ministry of Timber Industry operates a large construction trust, the "Lestranstroy", for the purpose of building these enterprises. This trust has six building branches and numerous building sectors which are equipped with scores of bulldozers and dump trucks, narrow-gauge steam engines and flatcars, excavators, sleeper sawmills and many other equipments. In recent years, large scale production of prefabricated wooden houses has been set up at the enterprises of the "Kareldrev" Trust, which provides an adequate quantity of parts for factory-made homes to the timber settlements.

Central mechanical-repair shops have been set up at Petrozavodsk, Belomorsk, Segezha, Medvezh'egorsk and repair facilities at the mechanized logging enterprises for the purpose of providing maintenance on the enormous amount of technical equipment at the logging enterprises.

The mechanization of logging operations and modern types of mechanized timber transport have made possible the development and normal exploitation of large forest tracts on the basis of fully concentrated cutting and utilization of all the varieties of timber in the cutting area. As early as the second five-year plan, selective cutting was going out of date and there was a gradual changeover to complete cut-off of industrial forest. This was also facilitated by the development of the wood processing industries.

In connection with this, there has been an abrupt change in the variety of logs cut. Together with the necessary cutting of sawmill materials, the cutting of all other varieties was also undertaken at the felling area. The changes in the varieties of logs cut during the period since 1928 is characterized by the data given in the Table III. The data given in this Table characterize the overall changes in the variety structure of logs cut as a whole throughout the Republic, including local and other logging.

TABLE III

CHANGES IN THE VARIETIES OF TIMBER CUT

Variety	% of Total 1927/28	1940	1950
Saw Timber	71.5	24	24
Pulpwood	---	13	21
Other Varieties	10.5	31	33
Fire Wood	18.0	32	22

According to the chief supplier of timber in the Republic, the Ministry of Timber Industry, the variety of timber cut at the present time is as follows (in %):

Sawmill timber	24.3
Pulpwood	26.0
Sleepers	9.3
Mine timbers	6.5
Building lumber	8.1
Other usable varieties	3.3
Firewood	22.5

This data clearly characterizes the Republic's role in the realm of timber supply to the national economy of the USSR. The main varieties are pulpwood, sawmill timber, mine timbers and sleepers

During the postwar period there have been significant changes in the distribution of logging operations in the Republic's territory. (Note Table IV following.)

TABLE IV

CHANGES IN DISTRIBUTION OF TIMBER CUTTING

Forest Economy Raions	Actual Volume of Cut, in % of Norm.	
	1940	1954
Severnyy	36.8	21.0
Kemskiy	21.6	42.0
Belomorskiy	52.8	103.0
Sesezhskiy	105.0	100.0
Zapadno-Karel'skiy	3.0	30.0
Zapadno-Onezhskiy	110.0	108.0
Pudozhskiy	56.9	40.0
Zhelezodopozho - Svirskiy	101.5	246.0
Ladozhskiy	50.0	130.0

The volume of timber output considerably exceeds the estimated volume in the Zapadno-Onezhskiy, Zheleznodorozhno-Svirskiy, Ladozhskiy and the Belomorskiy raions. In the Zheleznodorozhno-Svirskiy raion, due to the simultaneous exploitation of practically all the cuttable stands of timber, the ready reserve of timber in the raion will have been used up within 15 to 18 years.

Seventy-one per cent of all the timber cut in the Republic in 1954 came from five of the forest economy raions whose main forest tracts are situated in the zone of trunk transportation lines, the ratio of overall reserves in these five raions is 42%

The standard of logging is low in the Severnyy, Kemskiy, Zapadno-Karel'skiy and the Pudozhskiy forest economy raions. Only a small part of the forest is being exploited here, this part is situated near the main transport routes. The development of forests in these raions is associated with the further development of railroad transport in the western regions of the Republic and the construction of gravel roads in the Pudozhskiy raion. The Severnyy, Kemskiy, Zapadno-Karel'skiy and the Pudozhskiy forest economy raions are the main base for further significant growth in logging operations in the Karel'skaya ASSR.

Thus, the volume and distribution of logging has not yet been brought in line with the corresponding raw resources. A number of forest tracts in the western regions of the Republic and in the Pudozhskiy raion, located at a distance from the trunk railroad lines, are not as yet being intensively exploited. Felled timber is not being utilized adequately. There is little use made of deciduous species of trees in most of the raions and material suitable for firewood, as well as small timber, is left on the cutover area. The total utilization of trees cut does not exceed 80% in the Karel'skaya ASSR.

The most important economic task in the Republic is to place logging on a par with the national economy and to bring it in line with its potential in terms of its raw resources. This task can be accomplished by improved organization of work and use of equipment, widespread introduction of the most up-to-date equipment and techniques, a sharp increase in the productivity of labor, as well as by a considerable increase in construction of new, mechanized logging enterprises and by the growth of the productive forces in the logging industry.

At the present time a transportation base is being built for development of the forest tracts in the western regions of the Republic and in the Pudozhskiy raion. Construction of the Zapadno-Karel'skiy railroad is continuing and work has begun on the reopening of the railroad branch from Loukhi to Kesten'ga. Together with the development and expansion of the capacities of operating mechanized establishments, new large mechanized establishments are being built in the Pudozhskiy raion, in the regions of the upper Suna, in the Rebol'skiy forests in the basins of Lake Segozero and the Kem' river as well as in other sectors of the Karel'skaya ASSR. These measures, together with further construction of logging establishments will ensure an increase by 1½ times in volume of timber cut in the sixth five-year plan.

The first successes in overcoming the lag in timber cutting were achieved during the fifth five-year plan. In 1953, the volume of timber cut in the Republic as a whole increased by nearly 1.5 times (by 48% in comparison with 1950 and by 19% as compared with 1952). The main supplier for the Republic, the Ministry of Timber Industry, increased timber cutting by 22%, or 1.5 million cubic meters in 1953. In 1955, the volume of timber cut in Karel'ya amounted to nearly 12 million cubic meters, which is nearly 7 times more than the 1913 level. During the fifth five-year plan timber cut in the Republic increased by 70%.

THE WOODWORKING INDUSTRY

The make-up and technical standard of the lumber-sawing and woodworking industry in the Republic was fundamentally changed during the five-year plans. Newly created products were turned out by the woodworking industry in conjunction with the complete reconstruction of the lumber sawmills and the outfitting of these with the latest equipment (replacement of sluggish saws with new high-speed equipment). Prefabricated housing, furniture and veneer manufacture grew out of the large independent branches of the woodworking industry.

Table V given below shows the changes in the ratio of different products of the woodworking industry in the Republic.

TABLE V

CHANGES IN THE OUTPUT RATIO OF PRODUCTS IN THE WOODWORKING INDUSTRY

(in %)

Type of Product	1928	1932	1940	1953
Saw Timber	100	96	83.5	33
Pre-Fab. Housing	---	---	---	47
Ski-Furniture	---	4	15	11
Veneer	---	---	1.5	9

Kilns have been set up at the sawmills, lumber dressing has been organized and the sale of improved lumber, boxwood and other wares has been provided.

Ski and furniture making was part of the woodworking industry during the prewar years. The first large enterprise of this branch of industry was built during the first five-year plan at Petrozavodsk, this factory made skis and furniture. It was destroyed during the occupation of part of the Kareliya territory during the second World War.

In 1938 and 1939, the Nadvoitskaya furniture factory and a large furniture shop at the Medvezh'egorsk lumber mill were built. In 1940 the Khelyul'skaya furniture factory was renovated and a small one was built at Kondopoga.

By the beginning of the second five-year plan, the level of lumber sawing had increased by 2.5 times over that of 1913. During the period 1928 to 1940, the gross output of the sawing and woodworking industry had increased by 2 times, mainly in the production of wooden articles such as skis, furniture, veneer itc.

New woodworking enterprises were built during the postwar years within the local and cooperative industries. Besides this, the new, large scale industry in prefabricated housing was created. The Petrozavodsk prefabricated housing kombinat was built which produces more than 200 thousand cubic meters of living space per year. A prefab housing kombinat grew up at the site of the Segezha sawmill, another small one was built at Letnerechenskiy, as well as a large prefab shop at Belomorsk and Naysten'-yarvsk lumber mills and production of parts for wooden homes was organized at other lumberyards. Prefabricated housing is becoming one of the biggest products of the woodworking industry in Kareliya.

By 1953, the 1940 level of production in sawmill products had been reached. Production of furniture had increased by 2.5 times in comparison with 1940 and that of veneer and sheeting by more than 4 times.

However, the development of lumber sawing and woodworking in the Karel'skaya ASSR is still considerably behind the demands of the national economy and behind the level of logging operations attained in the Republic, particularly in the Kemskiy, Zapadno-Karel'skiy and Pudozhskiy forest economy raions.

Reconstruction and expanssion of the Solemenskiy and Medvezh'-egorskiy sawmills was begun in 1953; six additional saw frames were set up at several of the operating lumberyards, and construction of the Porosozer-skiy lumber mill was begun.

Furniture production will increase by 3 times in the near future due to the completion and full operation of the Khelyul'skaya furniture factory and the building of a number of new enterprises for local and cooperative industries in Petrozavodsk and other centers.

During the fifth five-year plan, the sale of sawmill products increased by 2 times and amounted to about 1.4 million cubic meters in 1955; the sale of veneer increased by 3 times, that of parts for prefabricated homes increased by 2.8 times and that of furniture by 80%. The directives of the Twentieth Congress of the CPSU for the sixth five-year plan of development of the national economy of the USSR foresee the output of sawmill products increased by an additional 1.8 times. This increase will be ensured by the construction of the Novo-Kemskiy sawing and woodworking kombinat, addition to the Porosozerskiy lumber mill, completion of reconstruction of the Segezhskiy, Solomenskiy, and Medvezh'egorskiy lumber mills, as well as extension of sawing operations at all the currently operating enterprises.

THE CELLULOSE-PAPER INDUSTRY

The cellulose-paper industry is the most rapidly growing branch of industry in the Karel'skaya ASSR, it is concentrated mainly in the large combined enterprises with modern equipment. The foremost such enterprise is the Kondopozhskiy Kombinat, which produces newsprint and wrapping paper and supplies itself with the necessary semi-products (cellulose, woodpulp).

The Segezhskiy cellulose-paper kombinat went into operation in 1939, it includes a sulphate-cellulose plant, a paper mill, paper tare shops and wood chemistry shops. The inauguration of this kombinat, equipped with the latest equipment and using the pine so plentiful in Kareliya, opened up a new and much higher stage of development in the cellulose-paper industry of the Republic and met the requirement for complex processing of forest products locally. The Segezhskiy Kombinat is the largest paper box producer in the USSR.

In 1941, the renovated Pitkyarantskiy sulphate-cellulose plant, the cellulose-paper kombinat at Kharlu and the Lyaskel'skaya paper mill went into operation.

The presence of the above-described enterprises has converted Kareliya into one of the greatest cellulose-paper industry regions in the USSR.

During the fourth and fifth five-year plans, all the cellulose-paper enterprises were renovated and their capacity increased, the Suoyarvskiy carton kombinat was renovated and the capacity of the Segezhskiy kombinat for production of paper and paper tare was considerably expanded. By 1950 the production of the cellulose-paper industry had exceeded the 1940 level in paper production by 2.5 times, in production of paper bags by 3.5 times and of cellulose by 2.5 times.

The volume of output of the cellulose-paper industry has practically doubled in the fifth five-year plan. This has become the leading branch of industry in the Karel'skaya ASSR and has great prospects for the future.

According to the directives of the Twentieth Congress of the Communist CPSU the production of paper during the sixth five-year plan will increase by 1.8 times. The Kondopozhskiy and Segezhskiy cellulose-paper kombinats are being expanded, their capacity is being increased by 2.5 times. A large carton kombinat will also be built at Kem'.

THE DISTRIBUTION OF WOODWORKING AND CELLULOSE-PAPER INDUSTRIES THROUGHOUT THE FOREST ECONOMY RAIONS

The main cellulose-paper and woodworking industry enterprises are concentrated in three of the forest economy raions. These are the Ladozhskiy, Zapadno-Onezhskiy and the Segezhskiy, these produce 94.8% of the gross product of the cellulose-paper industry and 68.6% of the gross product of the woodworking industry for the Republic at the present time.

The capacity of the cellulose-paper and woodworking industry enterprises situated in the Ladozhskiy raion ensures the processing and consumption of all wood cut in the raion, but with a deficit in spruce pulpwood, ski and veneer birch. Part of the deficit in wood varieties is made up by imports from neighboring forest economy raions. Further development of the woodworking industry in the Ladozhskiy raion could be based mainly on the utilization of leftovers from logging and woodworking (wood chemistry, as well as in the processing of semi-products produced within the raion (sawmill timber, cellulose).

Most of the timber cut in the Segezhskiy forest economy raion is processed locally. This raion is a large producer of paper tars, spirits, prefabricated house parts and some wood chemistry products (turpentine, etc.). The Segezhskiy kombinat is being greatly extended. Its output is being tripled due to the increase in volume of logging and mainly due to the utilization of raw materials as firewood.

In the Zapadno-Onezshskiy forest economy raion newsprint is produced along with sawmill timbers, parts for prefabricated houses, furniture and carpentry items.

The wood processing enterprises in this raion will be able to handle all the locally cut saw-timbers, spruce pulpwood, sleepers, and part of the ski and workable birch. It is necessary to solve the problems concerning the organization of processing small scale pinewood, part of the usable deciduous species, and the great amount of waste wood at the logging and processing establishments.

In the other forest economy raions of the Karel'skaya ASSR the processing of wood is still far behind the level of logging operations. There is a small carton factory and three sawmills in the Zapadno-Karel'skiy raion. In the remainder of the forest economy raions the processing of timber is limited mainly to sawing.

The potential for further development of the cellulose-paper industry and woodworking enterprises in the Karel'skaya ASSR is reflected in the data given in Table VI on the following page.

Table VI

THE RATIO OF RESERVES IN FOREST ECONOMY

RAIONS AND THE GROSS OUTPUT OF ENTERPRISES

(in % of Total Volume in the Republic in 1954)

Forest Economy Raions	Timber Reserves Being Exploited	Volume of Timber Cut	Gross Output in cellulose-paper industry	Gross Output of the Sawing & woodworking industries
Severnyy	11.4	3.6	---	2.0
Kemskiy	20.0	10.8	---	10.0
Belomorskiy	7.3	11.8	---	11.4
Segezhskiy	11.5	14.0	55.4	11.6
Zapadno-Karel'skiy	16.0	7.5	5.2	5.0
Zapadno-Onezhskiy	13.7	21.8	15.1	29.0
Pudozhskiy	11.0	7.2	---	3.0
Zheleznodorozhno-Svirskiy	3.0	12.0	---	---
Ladozhskiy	6.1	11.3	24.3	28.0

Three of the forest economy raions in the Karel'skaya ASSR (Segezhskiy, Zapadno-Onezhskiy, Ladozhskiy) produce the overwhelming bulk of the cellulose-paper industry products and more than 2/3 of the woodworking output. The remaining raions have 68.7% of the usable reserves of timber and produce 52.9% of the timber cut in the Republic, 5.2% of the cellulose-paper industry products and 31.4% of the woodworking industry products.

WAYS OF FURTHER DEVELOPING THE LUMBER AND

PAPER INDUSTRIES

Expanded work in the development of the lumber and paper industries in the Karel'skaya ASSR during the sixth five-year plan will ensure intensive exploitation of the poorly utilized reserve of timber in the western regions, as well as in the Pudozshskiy raion and will bring logging to a maximum level in the year 1960.

This will do away with the inquality in distribution of logging operations throughout the Republic and will sharply increase the ratio of northern and western regions in the overall volume.

During the sixth five-year plan a great step forward will have been made with the increase in production of sawmill timbers and paper by 1.8 times, this will close the gap between processing of timber and logging operations.

In the more distant future it will be expedient to create large centers for wood processing in the northern and western regions of the Republic at the settlements of Yushkozero, Sof'yanga, Lenderay, as well as expanding timber processing at Kem'.

The volume of work done in the new centers will be equal to the volume of processing done throughout the Republic at the present time.

With the existing level of logging in the Republic it is possible to increase timber sawing by nearly 1 million cubic meters and to undertake additional processing of 500 to 600 thousand cubic meters of small-scale pine in the cellulose-paper industry.

In connection with the changeover of the cellulose-paper industry and other branches of the economy to mineral fuel, a great quantity of firewood materials will be made available (about 800 thousand cubic meters) for processing in the cellulose-paper and wood-chemistry industries.

The sulphate-cellulose and hydrolosis industries can also utilize the waste materials from sawmill and wood processing industries, these have been utilized to an insignificant degree up to the present time. At the current rate of sawing these waste materials amount to more than 600 thousand cubic meters.

It will be necessary to increase the cut of grade birch by 2.5 to 3% of the total volume of logging in the near future in order to meet the needs of growing production of furniture, veneer, skis and other wares.

The erection of wood-chemistry shops as chemical energy installations at the wood processing enterprises is of great significance for the introduction of the latest equipment in the wood processing industry and for the production of acetic acid. Such shops will ensure, together with the rational utilization of firewood and waste materials at the lumbering sites, the acquisition of high calorie fuel for engines (gas, charcoal) and will lay the foundations for the energy base on which to centralize electrical power supply to the wood processing enterprises.

The problem of utilizing the accumulating reserves of pine tar can be solved by construction of resin extracting plants in the Medvezh'egorskiy raion and at other points as well as by increasing the extraction of oleoresin by tapping all the suitable pine stands within reach.

The realization of all these plans will result in a continued rapid growth in the wood processing industry of the Republic.

THE FISHING INDUSTRY

Fishing in the Karel'skaya ASSR is closely associated with one of the greatest fishing regions in the Soviet Union, i.e., the Northern region.

The fishing organization of the Karel'skaya ASSR takes part in fishing operations in the North Atlantic and on the Barents and White Seas. Fishermen of the Republic share the waters of Lakes Ladoga and Onega with kilkhozes in the Vologodskaya and Leningrad Oblast's. However, the Republic has a modes role in northern fishing, its catch does not exceed 67% of the overall take. Incidentally, in 1932 the ratio of fish caught in the Republic (including the Kandalakshskiy raion, but excluding the northern Priladozh'ye) amounted to 12% of the catch for the northern fishing region. The decline in the ratio of catch for the Republic is accounted for by the rapid growth of the Murmansk fishing industry, which is based on the enormous fish resources of the northern part of the Atlantic Ocean and the Barents Sea. This decline is also conditioned by the incomplete utilization of fish resources in the White Sea and the internal lake and river water reservoirs of the Republic.

Modern fishing in the Karel'skaya ASSR differs fundamentally from the primitive fishing trade of the pre-Revolutionary period both in its social structure and in its technical equipment and scope of the trade.

The organization of fishing kilkhozes, motorized fishing stations (MRS) and state fishing industry was the basic means of converting the old fishing trade into a branch of industry which provides a varied product. Fishing is the only branch of the food industry in the Karel'skaya ASSR which produces for export to other regions of the Soviet Union.

The fishing industry has acquired a new materil-technical base during the years of socialistic construction. In connection with this, there has been a pronounced change in the organization of labor and fishing techniques, permitting the development of new fishing regions and reservoirs and creating the possibility for active deep water fishing in the open sectors of the reservoirs. Fishing surveys have been organized.

The foundations have been laid in the Republic for fishing-boat buildting and for production of technical fishing equipment. Technical reconstruction of the industry has accompanied the expansion of its production base during the postwar years. The most obvious index of this reconstruction is the increase in the value of trade equipment per fishermen employed in the industry. By 1951 this index had grown by more than 3 times in comparison with 1940, of which, that used on the internal reservoirs has increased by 6.5 times, on the White Sea by 3 times and on the Barents Sea by 2 times.

From 1931 to 1940, the yearly take of fish in the Republic amounted to an average of about 120 thousand centners, it fluctuated greatly for different years. During the difficult war period the Kareliya fishermen not only preserved their 1940 standard, but even exceeded it a little. During the fifth five-year plan the volume of catch considerably exceeded the maximum catches for the prewar period and during the entire postwar period the take of fish increased by 3 times. By 1955 the catch amounted to 330 thousand centners, of which the Barents Sea and Northern Atlantic produced 267 thousand centners, the White Sea 2.5 thousand centners and the lakes and rivers produced 40.5 thousand centners. The yearly catch is gradually becoming stabilized.

Most of the catch is taken during the spring and summer season in Kareliya. This catch is characterized by the data in Table VII below.

Table VII

SEASONAL DISTRIBUTION OF CATCH IN 1953

(in %)

Quartal	Barents Sea	White Sea	Interior Waters	All Reservoirs
I	6.9	14.5	7.4	7.8
II	43.5	48.9	39.3	43.3
III	38.7	21.9	17.8	33.3
IV	10.9	14.7	35.5	15.6

Fishing on the seas exceeds that on the internal reservoirs of Kareliya in terms of ratio of catch, technical equipment and numbers of fishermen taking part. In 1955, 88.2% of the total catch for the Republic was taken on the seas.

The Barents Sea and the Northern Atlantic are of particularly great importance in sea fishing. Teriberk (a settlement on the Murmansk coast) is the base for the Kareliya fishing fleet, a Branch of the White Sea Base for State Fishing (Goslov) located there as well as the White Sea and Kemsk MRS. Trawling is the dominant mode of fishing in the Barents Sea and the Northern Atlantic.

About a quarter of the total Republic catch was taken from the Kareliyan sector of the White Sea in 1954. In 1955, the absolute size of catch on the White Sea had grown, but the ratio of the White Sea trade had considerably decreased and amounted to about 7%. The White Sea trade differs from that of the Barents Sea in organization of regional catch and its lower level of technical outfitting. Passive coastal fishing equipments continue to be of importance in White Sea fishing, these include dip nets, weirs, drag seines and gill nets. White Sea fishing is still of a seasonal character and is most actively participated in during the spring and summer. Active deep water fishing on the open sea has still not been organized due to the lack of knowledge concerning fishing on the White Sea.

Fishing equipment on the White Sea is in the process of being rebuilt during the postwar years. Two motor fishing stations, the Kemskaya and the Belomorskaya, have been set up, these have facilitated the improved organization of fishing and an increase in catch.

Herring is caught mainly in the Bays of Sorokskaya, Sumskaya, Pon'gomskaya and at the mouth of the Nyukhcha river during the period of its massive congregation at the shore. Both spring and fall fishing is done on the open waters. Winter ice fishing is also of importance. Up to this time the herring trade has been mainly developed along a narrow inshore belt during limited periods when the herring approach the shores.

About 2/5 of all the herring caught in the White Sea is taken in Kareliyan waters at the present time. Navaga fishing is concentrated mainly along the Pomorskiy shore of the Onezhskaya Guba, in the vicinity of the coastal settlements of Yukovo and Lokezhma and along the Kareliyan coast near the settlement of Chernaya Reka. Winter (under ice) fishing produces about 70% of the total navaga catch.

On the average, about 1/5 of the total navaga catch in the White Sea is taken from the waters of the Karel'skaya ASSR with considerable fluctuation from year to year.

Large scale fishing for White Sea smelt is carried on at the estuaries of rivers in which these spawn during the spring. The catch in Kareliyan waters makes up about 50% of the smelt catch in all the White Sea.

The rivers in the soutern sector of the Onezhskaya Guba are the main areas for smelt fishing, of these, the Nyukhcha river is foremost. Schools of spawning smelt are not fully utilized in other rivers.

There is a sharp decrease in the amount of smelt taken during years of good catch of spawning herring, and conversely during poor herring years the fishermen switch over to smelt fishing.

There are periodic fluctuations in the Atlantic salmon catch on the White Sea. The catch of salmon in the White Sea and in the rivers flowing into it make up about 30% of the world catch, while catch in the coastal rivers of the Republic make up 1/3 of the salmon caught in all of the White Sea Basin.

In Kareliya, salmon is caught in the following White Sea Basin rivers, among others: the Kem', Kereta, Chernaya, Gridinaya, Pon'goma, Von'ga and Nyukhcha. The Vyg river, which, prior to the building of the dam, was also one of the best salmon rivers in the White Sea area, has now lost its value as a fishing river. The Kem' river is the best salmon river. From 200 to 250 centners of salmon had been caught here. In recent years the salmon catch on the Kem' river has been limited for the purpose of improving the salmon shoals in the White Sea; in different years a catch of up to 100 centners is permitted. Fishing for such a quantity of salmon under conditions of protected spawning for some of the schools entering the Kem' river will not undermine the fish reserves.

The fish catch in the interior water reservoirs of the Republic in 1951 increased in comparison with that of 1940 by 31% and amounted to about 27% of the total catch for the Republic. This volume of catch remained at about the same level (about 41 thousand centners) up to 1955, when its ratio in the total catch for the Republic decreased in connection with increased fishing on the Barents Sea.

As had been stated, before, salmon species of fish predominate in the northern interior reservoirs of Kareliya, while in the southern reservoirs carp species predominate. Relative to the fish population in various lakes there are different periods for large scale fishing and different types of equipment are used.

On the whole, fishing in the interior water reservoirs of the Republic is still basically coastal seasonal trade, and in its scope does not correspond to the potential of the raw materials base, or to the requirements imposed upon it by the national economy.

Even now there have been some improvements in the equipment used on inland fishing. Of the new equipment available for lake fishing, the double-barrelled weir, set out on anchors, has found widespread use. Frame nets made of synthetic fiber and trap nets are characterized by their large catch. Small vessels such as Lister boats (a small kind of sloop) and small fishing motorboats are in use on practically all of the larger lakes in the Republic.

The motorboat fishing fleet on interior waters is concentrated mainly on the Lakes Ladoga and Onega.

The fishermen on interior waters are outfitted by the Prionezhskaya MTS and by the fish plants.

More than 1/2 of all fish caught on interior waters are taken from Lake Onega, and 1/7 are taken from Lake Ladoga, while 1/3 of the catch comes from the remaining lakes and rivers in the Republic.

The species composition of catch taken on interior waters in Kareliya is characterized by the data given in Table VIII below.

Table VIII

SPECIES COMPOSITION OF CATCH TAKEN

IN INTERIOR WATERS

(in %)

Species of Fish	Lake Onega	Lake Ladoga	Other Lakes
Cisco	34.4	5.8	21.6
Smelt	34.2	65.2	2.0
Burbot	5.7	0.9	6.8
White Fish	6.3	12.1	3.7
Pike-Perch	3.0	2.0	3.4
Roach	3.0	3.3	6.8
Perch	2.9	2.3	7.1
Bream	1.4	2.2	12.1
Salmon, Trout	1.7	5.8	1.2
Pike	1.4	0.8	8.2
Ocean Perch	2.4	—	6.0
Other	3.6	8.6	21.0

Among the other lakes the outstanding ones are: Vodlozero, Vygozero, Syamozero, Potozero, Pyaozero and Segozero.

Smelt and cisco are the most important fish caught on the interior waters. The most valuable catches in terms of species composition are, firstly those of the Onega Lake, and followed by Lake Ladoga.

The actual catches on interior waters in the Republic indicate that there is incomplete utilization of the reserves. The fish yields of the largest lakes are characterized by the data given in Table IX below.

Table IX

FISH OUTPUT OF LARGE LAKE

(in Kg/Hectare)

Lake	Actual Catch	Feasible Catch
Pyaozero	0.7	5.0
Topozero	0.4	3.5
Vygpzero	2.6	7.0
Segozero	0.5	4.0
Syamozero	5.4	15.0
Onega	2.3	3.5

The reason for the low industrial productivity of the lakes is the extended manner in which the fishing economy is carried on and the continuing shortage of suitable fishing equipment.

The improvements being introduced at the present time and the technical re-equipment of the trade are intended to increase the catch taken from interior waters and to raise the contribution to the total catch for the Republic.

The main organizations which are carrying on fishing in the reservoirs of Kareliya are the fishing kilkhozes and brigades of the Goslov fish plants. The MRS play a great role in the organization of the fishing industry. These stations provide the fishing kilkhozes with technical equipment (fishing gear and boats), they aid in the organization of fish handling at the fishing communities and its transportation to the processing points.

There were 89 fishing kilkhozes in the Republic at the end of 1955. The fishing kolkhozes in the Republic average 32 households each. The largest are the White Sea kolkhozes. The average catch per kolkhoz on the White Sea coast is approximately 3 times greater than for a kolkhoz in the Priladozh'ya. Of the kolkhozes in the Republic, 25% are located on the White Sea coast, 18% are on Lake Onega, 2% are on Lake Ladoga and 55% are on the remaining interior waters.

The income from fishing comes to about 2/3 of the monetary income of the fishing kolkhozes while the working days spent on fishing and on work associated with it amount to about 2/5 of the total number of days, i.e., about 30% less than spent on agricultural work, which is a subsidiary branch for these kolkhozes. Farming is of more importance at those fishing kolkhozes which are situated on the medium-sized and smaller water reservoirs of the interior.

Legislation passed in 1953 through 1955 (excusing the fishing kolkhozes from fulfilling agricultural norms, increasing fish prices, etc.) made it possible to increase the income from fishing to the kolkhozes, to effect maximum utilization of the labor force in this important branch of the economy and to intelligently combine fishing with livestock raising and tilling.

Among the outstanding fishing kolkhozes in the Republic are the "Twelfth Anniversary of October" and "Pobeda" in the Kemskiy raion, which were participants in the All-Russia Agricultural Fairs of 1955 and 1956.

The Belomorsk kombinat processes the fish from the White Sea and the lakes and rivers of the northern regions of the Republic; the Petrozavodsk kombinat processes fish delivered from Lake Onega and the lakes of the southern regions. These two kombinats produce a wide range of finished products: canned fish, smoke-cured fish, balyk (cured fillet of sturgeon) specially salted fish, fresh frozen and dried fish. These products are in great demand, not only in the Republic, but far beyond its borders as well.

Besides the fishing kombinats, initial processing is carried out by fish packing plants which are situated in the areas of heaviest concentration of fishing. The fish catch taken by Kareliyan fishermen in the Barents Sea and the North Atlantic are delivered to the fish processing enterprises of the Murmansk Oblast'.

In compliance with the task of increasing food production, it is planned to increase the 1960 fish catch in the Republic by 2 times in comparison with 1955. In order to ensure that this program is fulfilled, the latest fishing equipment will be introduced, the laborious tasks in fishing and off-loading boats at the fishing stations will be mechanized, fishing boat building will be expanded.

It is planned to increase the fish processing industry by rebuilding the Belomorsk and Petrozavodsk fishing kombinats and by constructing new plants on the White Sea and Lake Ladoga, by building refrigerators at Belomorsk, Sortovala and in the Olonetskiy (Vidlitsa), Pudozhskiy (Kuganovolok) and Loukhskiy raions.

In conjunction with the growth of manufacturing enterprise, residential building for the permanent fishing cadres is being carried out.

MINING

Great reserves of valuable minerals are associated with the peculiar geological formations on the Kareliyan territory. The reserves of pegmatite, mica, cyanite, granite as well as ore minerals on the Republic's territory are of nationwide importance. Other mineral resources, in particular ribbon clays, serve as raw material for the local building materials industry.

The development of the mining industry in the Republic at the present time is far from being in keeping with the favorable conditions for utilization of the widely distributed reserves of mineral resources. These favorable conditions include the location of most of the deposits directly on waterways which are suitable for transporting mined products to the points of consumption, the proximity of Leningrad, which is one of the greatest conters of consumption of these products, and finally the lengthy period (more than 200 years) during which the mining industry has been in existence in Kareliya. Therefore, mining has a basis for its conversion into one of the leading branches of the national economy of the Republic.

A dolomite marbel deposit was worked during the latter half of the 18th century near the village of Tivdiya (within the borders of modern Kondopozhskiy Administrative raion), deposits of calcite-limestone marble were known at the settlement of Ruskeala (Sortaval'skiy raion) as well as the Serdobol'skiy granites on the coast and islands of Lake Ladoga. Kareliya is the founder of the Russian mica industry (begun in the 17th century).

In the second half of the 18th and the first half of the 19th centuries the demand for Kareliya stone was quite great; Kareliyan decorative stones were particularly widely used in the erection of the largest building in Petersburg. During this period, new deposits of granite, greenstone, breccia and other minerals were discovered and opened up.

In later years the use of Kareliyan decorative stone declined continually and by 1917 its deposits were no longer worked. Petersburg requirements for stone construction materials was met mainly by imports from Finland.

During the Soviet period, Kareliyan stone was again used in construction It is now used for the facings of building and for monuments at a number of cities in the nation; this stone is used in the construction of new buildings in Petrozavodsky, Sortavala, Segezha, Kondopoga and other cities.

The Kareliyan mining industry began to revive in 1920. In 1924, in response to the needs of Leningrad and Moscow, a large mechanized enterprise was created, the "Onega Diabase Mines", which exploited the Roprucheyskoye deposits for provision of paving stone. This enterprise was equipped with stonecutting machinery and drill hammers, it had its own dock and a railroad network. Paving stone was transported to Leningrad by water, while that for delivery to Moscow was reloaded onto railroad cars at the intersection of the river Svir' and the Kirovsk railroad. In 1921, the long-abandoned mining of mica was revived.

Further geological study of the territory resulted in the discovery of new, heretofore unknown of mineral deposits and valuable minerals (pegmatite, cyanite, talc, garnet and metal ores) and the location of new reserves of already known deposits of building stone.

In the prewar years, new mining enterprises undertook exploitation and production of decorative and facing stone, marble, pegmatite, mica, granite, quartzite, talc-chlorite stone, etc. Laborious processes were mechanized: hand drilling was replaced by pneumatic drilling, loading was mechanized, transportation and off-loading of rock and mining products was mechanized. In 1940, production of construction stone gave 4.1% of the gross industrial product for the Republic, while the mining industry as a whole gave 6.2%.

At the present time the mining industry in Kareliya is distributed mainly along the western and eastern shores of Lake Onega, on the northeastern shore of Lake Ladoga and northwards from that Lake as well as in the Loukhskiy raion.

Granite is mined in the Vostochnyy Prionezh'ya (the settlement of Kashina Gora); the quartzite-sandstone and quartzite at Kamennyy Bor are worked at Petrozavodsk, on the west shore of Lake Onega, cutting of Onega diabase has been expanded etc. The Ruskeal'skoye deposits of marble-like limestones and dolomites is being exploited, in connection with this the existing enterprises are being rebuilt for the purpose of expanding production of marble construction material and limestone. In addition, marble rubble and chippings at the Ruskeal'skoye deposit are being processed into lime for the purpose of chalking soils. The Kashinskiy granites have been widely accepted in the production of decorative stone, as well as for making stone rollers used in crushing wood pulp in paper manufacture. Products from the Shokshinskiy stone quaries go to the metallurgical plants in the Donbass, the Urals and the Kuzbass.

The existing establishments were rebuilt and equipped with new machinery, excavators, perforators, pneumatic hammers, conveyors, cranes, etc. However, the development of the Kareliya stone resources is still not great in comparison with its enormous reserves; part of the product remains in the warehouses, while many of the deposits have not been developed at all; for example, the marble deposit in the Prionzh'ya (Belogorsk, Lizhmozersk and others).

The main tasks in development of the natural building material industry in the Republic are:

(a) Developing the marble deposits in the southern and central sectors of the Republic;

(b) Utilization of the enormous granite deposits on the east shore of Lake Onega between Medvezh'egorsk and the mouth of the Vodla River;

(c) Expanding the cutting of diabases on the west shore of Lake Onega and the gabbro-diabases in the Priladozh'ya;

(d) Utilization of the quartzites in the vicinity of Shokshi and Segozero not only as art-decorative stone, but also as fire resistant material (for the production of Dinas brick);

(e) Utilization of the dolomite deposit at the settlement of the Vidana (12 kilometers from Petrozavodsk).

Reconstruction of the Volga-Baltic route will extend the possiblities for marketing Kareliyan stone in the regions of the upper, middle and lower Volga, as well as in the Volga-Don Canal regions. T.A. Borisov in his work states that nowhere in the USSR is there "such a plenitude and variety of stone construction materials in terms of the technical and decorative qualities .... and that there is no stone in all of the Oblast's bordering on the Volga Basin, which is more durable and can withstand weathering and the effect of water better than the granite and the various diabase rocks from Kareliya". The pegmatite industry of the Soviet Union was first organized in Kareliya.

In the period 1923 to 1926, feldspar mining was distributed throughout the Soviet Union in the following manner: Kareliya 73%, Ukraine 11.8%, Urals 10.6%, Siberia 4.6%. Kareliya remains the main supplier of quartz-feldspar material for the porcelain industry of the Soviet Union up to the present time.

The development of the pegmatite industry in the Republic made it possible to end import of feldspar from Sweden and Norway even in the prewar period.

The main pegmatite quarries are located in the Loukhskiy raion, where the deposit named after Chkalov is located (on the Ambarnaya Guba of the Chupinskiy Zaliv of the White Sea), adjacent to which a mining settlement has grown up. Water transport delivers the product to the Chupa wharves from where it is shipped over the Kirovsk railroad.

Large pegmatite deposits have been opened up during the postwar period in the northern Priladozh'ya (peninsula of the Kuyvaniema and Pitkyarantskiy Zaliv and the Palatsaara Ostrov to the southeast of Impilakhta); one of these is now being worked.

As early as 1937 a pegmatite crushing plant had been set up at Kondopoga, it was destroyed during the war. In 1953, a new pegmatite crushing and dressing plant went into operation in Kondopoga. This enterprise is situated between the Chupinskiy and Priladozhskiy pegmatite deposits and uses water transport for delivery of raw pegmatite material during the summer. The crushing-dressing plant is equipped with the latest machiner. The raw material is elevated to the third floor (25 meters) from where it is moved by gravity through crushers, millstones and sieves, after that it passes through a magnetic separator which removes the iron. The product is used in the glass and porcelain industries. By the end of the sixth five-year plan the yearly output of pegmatite ought to reach 50 thousand tons.

Mica mining is concentrated in the Loukhskiy raion in the vicinity of the Chupinskiy Zaliv near the settlement of Khetalambina where the Republic's richest deposits of muscovite mica is located. The second largest deposit of mica is located to the south of the Chupinskiy Zaliv on the north shore of Lake Loukhskiy. Mica is extracted by tunneling and use is made of burrowing equipment and pneumatic drills. The mica bed or strata is cut out together with the surrounding rock.

Separation of mica from the side products (quartz, feldspar, black mica, etc.) is done at the mine. Final dressing is done at the mica factory in Petrozavodsk. The factory produces high grade mica which is used as an insulating material in the electrical industry, micanite, which is a cheaper type of electrical insulating material in the form of mica plates, and mica dust, which is used in the resin and paper industries as a chemically neutral additive as well as in other products.

At the present time cyanite deposits in Kareliya are beginning to be utilized in the preparation of high refractory clay materials.

During the sixth five-year plan the Kondopoga electric firebrick plant will be in full operation. This plant will produce high refractory, electrically-processed quartz and zirconium firebrick which will be used in the lining of the glass melting tubs and ovens and will ensure long life for this apparatus.

Thus, many of the mineral resources of Kareliya have been exploited. However, a large number of prospected, and an even greater number of still unexplored deposits are a reserve on which to base the further growth of the mining industry in the Republic. Still awaiting development are reserves of garnet, green stone, slate, volcanic tuff, iron ore etc.

THE METALWORKING INDUSTRY

The metalworking industry in the Karel'skaya ASSR has grown very much during the postwar period. By 1950, the output of the metalworking industry in the Republic had increased by more than 3 times in comparison with 1940, while in 1955 it had increased by 40% in comparison with 1950.

Machine-building in the Republic is represented by the Onezhskiy Tractor Works, which mainly serves the logging industry, by shipbuilding, ship repair and engineering plants, by two local industry enterprises, by metalworking shops of the raipromkombinats and by large mechanical repair and overhaul enterprises.

The metalworking industry in the Karel'skaya ASSR produces trucks for the timber industry, lowbeds, trailers, winches and other equipment, fishing boats, gas generators, small internal combustion engines for small fishing boats, metalware for the construction industry and for everyday use, etc. In 1956 the Onezhskiy plant began producing diesel skidding tractors. The spare parts production of the metalworking enterprises is most important to the Republic's economy. These parts are for the equipment used in the timber and fishing industry and in the rural economy. The metalworking and machine-building industry of the Republic thus has the ability to meet the peculiar needs of the national economy.

Small scale metallurgy is represented by the Vyartsil'skiy Alloy-Metallurgical plant. The possibility of developing a quality crude metal industry of countrywide significance based on Kareliyan iron ore resources is being investigated at this plant.

The actual role of the machine-building and metalworking industry is higher than can be deduced from the ratio of its output to the gross product of the Republic (22%) since the work of many of the metal-repair enterprises is included in the output of other branches of industry. Besides, many of these enterprises, as for example, the central repair shops of the Ministry of Forests Trust, are essentially small machine-building factories.

OTHER BRANCHES OF INDUSTRY

There are considerable number of enterprises in the Republic which produce wool cloth, felt footwear, knitted goods, furniture, skis, domestic utensils and other consumer goods. In particular, the Sortavala yandgoods mill produces woollen cloth.

However, local production of consumer goods is inadequate and it is necessary to import many wares which could be produced within the borders of the Republic. At the present time new furniture factories and furniture shops are being built.

The food industry, besides the fish packing plants, is represented by meat packing kombinats (Petrozavodsk, Sortavala and others); milk and butter plants, some of which also produce cheese; bakery kombinats and bakeries; breweries (Petrozavodsk and Sortavala), plants and shops producing non-alcoholic drinks, etc.

Local state industries under Republic, regional and town control and cooperatives produces about 10% of the industrial output of the Republic. Local industries (particularly cooperative establishments) have developed mainly on the basis of imported raw materials in recent years. State industries produce about 1/2 of the produce from local materials while the cooperatives produce only about 1/4 of their products from local materials. In the future it is planned to considerably increase production of consumer goods made locally and to sharply increase the utilization of local raw materials, particularly wood.

The distribution of local industry must also be changed since at the present time nearly 1/3 of all the products come from Petrozavodsk. The largest raipromkombinats are situated at Ukhta, Belomorsk, Kondopoga, Pudozha and at Vidlitsa. It is planned to build local industry establishments during the sixth five-year plan at Kondopoga (a shoe factory), at Segezha, Medvezh'egorsk and in the more remote regions (woodworking establishments in the western regions of the Republic).

Kareliyan cooperatives unite 41 artels and nearly 6 thousand workers, of which, 13 artels producing 1/3 of all cooperative produce, are located in Petrozavodsk.

More than half of all the cooperative products are sewn and knitted goods. Of the remaining branches, the best developed are those producing metal-wares, leather goods, food stuffs and wooden items.

THE RURAL ECONOMY

The kolkhozes in the Republic are relatively smaller than those in other sectors of the USSR because of the specific natural and economic conditions and partially because of the low population density. On the 1st of July 1938 there were 904 kilkhozes in Kareliya, these united 26.8 thousand households. Each kolkhoz had 30 households on the average.

The rural economy suffered heavy losses during World War II. By the end of 1949, there were 827 agricultural kolkhozes in Kareliya. Following the expansion of kolkhozes on the 1st of November 1955, there 352 kolkhozes in the Republic, including 263 agricultural and 89 fishing kolkhozes, of these the average kolkhoz was made up of 50 households. Each kolkhoz had up to 2000 hectares of land, of which agricultural lands amounted to about 800 hectares, of which plowed land amounted to 250 hectares. However, in both number of households and in tilled area, the kolkhozes in the Karel'skaya ASSR are considerably smaller than those in the central Oblast's of the USSR. This is accounted for not only by natural conditions but also by historic conditions, in particular the wide dispersion over the territory of small settled points.

The kolkhozes and sovkhozes occupy much larger agricultural land tracts in the southern regions. Thus, the kolkhoz "Tel'man" in the Sortavala raion, which is considered average in size, contains 1,226 hectares of land of which 286 are tilled areas. The sovkhoz "Pobeda" in the Pitkyarantskiy raion had 1,217 hectares of agricultural land including 963 hectares under the plow.

However, most of the kolkhozes have small agricultural areas. This can be seen from the data on Table X below.

Table X

DISTRIBUTION OF KOLKHOZES BY AREA OF

PLOWED FIELDS IN 1953

Plowed Area Per Kolkhoz (in hectares)	Number of Kolkhozes	% of Total
Up to:		
100	149	39
101 - 500	182	49
501 - 800	35	9
801 - 1000.....	6	2
Over 1000	4	1
Sub-Totals	376	100

The sovkhozes play a vital role in the rural economy of the Karel'skaya ASSR, most of these are livestock raising and dairying enterprises. The importance of the sovkhozes in the rural economy of the Republic can be seen from the fact that these contained 24% of the cattle, 38% of the swine, 65% of the reindeer and 18% of all horses as well as more than 20% of all sown areas.

According to data available for the 1st of November 1955, there were 28 sovkhozes in the Republic, excluding the fur farming sovkhozes, which in their specialization were distributed in the following manner: 25 were dairying and beef enterprises, 2 were vegetables and dairying enterprises and one was a reindeer raising sovkhoz.

Most of the sovkhozes are concentrated in the Priladozh'ya where there are 22. There are only 2 sovkhozes north of Medvezh'egorsk: the "Polyarnyy Pioner" and the Loukhskiy raion and a reindeer raising sovkhoz in the Kemsk raion.

The evolution of logging in new regions and the building of industrial centers there has created a great demand for products by the population of the central and northern sectors of Kareliya. In association with this the organization of sovkhozes has been undertaken in these raions.

The further development of the rural economy in the Karel'skaya ASSR is a pressing task. At the present time the Republic has to import most of its agricultural products from other regions of the nation. The development of subsidiary industries and enterprises as well as market gardening is not sufficiently well progressed in the Republic, the development of these has been given great attention at the present time.

The Twentieth Congress of the CPSU foresees the following increases in agricultural products in Kareliya by 1960 in comparison with 1955: milk production increased by approximately 2.3 times, meat by 1.6 times, potatoes by 3.2 times and vegetables by 5 times. In order to guarantee this growth, changes have been made in the organization-economic structure of the rural economy in the Republic since 1956. The main supplier of agricultural products under Kareliyan conditions must be the sovkhozes and industrial subsidiary enterprises. The number of sovkhozes and subsidiary enterprises has increased considerably in recent times. Steps have been taken to expand the kolkhozes, their total number has been considerably reduced.

SOIL RESERVES

According to data available in 1954, most of the soil reserves in the Republic are those soils which are not of agricultural value. The agricultural lands used for tilling, hay meadow and pasture amount to 3% of the soil reserves in the Republic, of which plowed lands make up approximately 0.8% of the territory of the Karel'skaya ASSR.

Two-thirds of all agricultural fields and 4/5 of all plowed lands are held by the State for use as kolkhozes and sovkhozes.

The data on Table XI below gives an idea of the composition of the soil reserves in use by the kolkhozes and sovkhozes.

Table XI

COMPOSITION OF SOIL RESERVES ON

KOLKHOZES & SOVKHOZES

IN %

Field	Kolkhoz	Sovkhoz
Plowed	12	12
Hay Mow	17	6
Pasture	9	3
Sub-Total Used Lands	38	21
Bush & Scrub	49	67
Swamp	6	6
Lakes & Rivers	5	4
Roads, Construction & Unused	2	2
Sub-Total Unused Lands	62	79

It can be seen from the above Table XI that the agricultural development of the Republic territory is still very small. Besides this the area of agricultural land, particularly meadows and haymows can be considerably increased by utilization of land recovered from swamp and fores. There is great possibility for extending natural pastures and haymows over the flood-meadows in the vicinity of lakes. There are enormous areas of excellent, but as yet undeveloped, natural fodder pastures for reindeer raising (reindeer lichen; Cladonia) in the northern regions.

The agricultural lands are extremely irregularly distributed over the raions of the Republic. The greatest proportion of agricultural lands is in the Priladozh'ya (up to 15%) and in the eastern Prionezh'ya (up to 10%); in the western Prionezh'ya the agricultural lands amount to 5%, and in the central part of the Republic 1.5%. Near the White Sea and in the north of the Republic the proportion of agricultural lands amounts to 1%.

More than 70% of all plowed lands are concentrated in the southern raion (Olonetskiy, Pudozhskiy, Kurkiyokskiy, Pryazhinskiy and others). Farther to the north the tilled areas are reduced and the areas under pasture are greater.

There are no agricultural lands of considerable size in the northern and central sectors of the Karel'skaya ASSR. They are scattered in separate small plots in the midst of swamp, forest, lakes and the outcroppings of primary rock.

This dispersion of agricultural land is typical of the northern and central parts of the Republic, however, patchiness of cultivated land is not unusual in the southern sector either. The reasons for this patchiness in agricultural lands is, first of all, the large amount of boulders in the soil and the broken nature of the relief, in the second place, the incomplete elimination of shallow contours in the fields. (Note figure on following page.)

Prior to the Revolution, the present enterprises did not have the means for developing the large land tracts and were therefore limited to selective development of well-drained and less stoney sectors. Stones were picked by hand on the developed plots and were piled on the borders or in the middle of the field in a stone pile. For this reason there are fields to be found (mainly in the northern and central sectors of Kareliya) on which the area under stone piles is practically as large as the area cultivated. The combination of the individual plots into larger tracts would require a considerable amount of equipment and time.

Most of the soils in Kareliya require reclamation work for improvement and maintenance of fertility.

The most favorable farming areas are in the southern regions of the Republic. However, here also most of the soil was formed of non-carbonaceous materials and is therefore characterized by increased acidity and requires chalking. The virgin lands and newly recovered podzolic soils also require chalking. About a third of all the cultivated fields in the southern sector of Kareliya are too wet. The amount of such land in the northern sector is even greater. The haymows and pastures are normally too wet. About 25 to 30% of the natural meadows are normally not fully utilized because of the excess moisture, particularly in years of abundant summer rain. This is an indication of the great importance of drainage for further development of tilling and livestock raising in Kareliya.

Most of the agricultural fields with sandy loam and sandy soil suffer from a lack of moisture, which has a particularly great effect on the raising of vegetables and other cultivated crops. Most of the plowed lands in the Republic are of single-grained soils which are easily eroded. It is very important that shelter belts of trees be planted. These also break the descent of cold air from above.

The natural fodder areas in the Republic are mainly dry bottom and bog meadows. The dry bottom meadows are elevated relief formations and do not produce useful fodder crops in their natural state. The elevations usually have podzolized, sandy loam and stony soils. Leaching of mineral substances from the soil on the sides of hills proceeds continually; grasses on such soils do not develop satisfactorily due to the lack of mineral.

Lowland meadows are widely distributed throughout all sectors of the Republic and are found mainly in the vicinity of lakes. These meadows normally have peaty soils, suffer from excess of moisture and are generally low-lying swamps. The hay on these meadows is varied and depends on the amount of moisture. The hay crop is better developed on the drained sectors. All excess moisture and swampiness in the low-lying meadows result in transformation of the grass crop and predominance in it of sedge grass and horsetail. The yield from the low-lying meadows is most unstable and depends on the state of spring and summer weather; on the average it varies from 8 to 15 centners per hectare of hay which is of low feed value.

The grass on the transitional type of swamp is of little value also. The swamps of the high land type require fundamental improvement and are not used as haymeadows. The swampy areas are the basic improvement reserve for a quality fodder base in the Republic.

The flood meadows are the most valuable. Their yield reaches 15 and 17 centners per hectare and more.

However, these typical flood meadows are very rarely found in Kareliya. Most frequently the flood meadows are covered with an overlay of moist peat soils and sedge grasses. Basic improvement of meadows and pastures is required to improve the fodder value of grass.

The fodder value of natural pastures is very low, since these are mainly local forests. Forest pastures have a small volume and low quality reserve of grazing and do not provide a sufficiently balanced ration for cattle, particularly at the end of the summer.

The pasture problem is therefore particularly great in Kareliya. Pastures have been used for a long time and many of them are in need of specialized improvement work. Experiments on temporary improvement to pastures carried out in the Republic, included thinning out of trees, creation of park and windbreak type pastures, all have shown that the best growth of grass is obtained by complete clearing of the forest. However, in many instances it is better to refrain from costly half-measures in organizing pastures and to tackle the problem of developing artificial sown pastures mainly on the better low-lying swamps and mineralized swampy land which are free from stone. Reclamation work in the Republic is being carried out by the Olonetskaya Mechanized Reclamation stations and by the Meadow Reclamation stations. It is planned to develop 55 thousand hectares of swampy land during the sixth five-year plan by means of constructing new drainage systems and reconstruction of the existing ones.

LABOUR RESERVES AND MECHANIZATION OF AGRICULTURAL PRODUCTION

The development of industry and cultural building in the Karel'skaya ASSR is being accompanied by a rapid growth in population, mainly in the towns and workers settlements. The growth in urban population is coming about mainly at the expense of the rural population. The decrease in rural population has extremely complicated the problem of providing agricultural produce to the work force.

Even now there are thousands of hectares of cultivated and other lands in Kareliya which are not being worked, and which prior to 1940 had been cropped by kolkhozes. More than 40% of the 1940 crop lands have been converted to lea, lay land and pastures at the present time. The exclusion of these lands from agricultural production has resulted in great losses to the rural economy of the Republic.

The most pressing situation with the work force at the kolkhozes occurs in the period from July through September; in this three-month period, about 35 to 40% of all work-days for the year are spent. This is the period for haying, harvesting, fall planting, fall plowing, etc. Another difficult period with the work force is in May (10% of all work-days), when spring plowing and spring planting is done. The labour deficit is normally made up at this time by workers from the towns, who come to the aid of agricultural workers. The fundamental problem of labour shortage can only be overcome by means of complete mechanization of the rural economy and the corresponding increase in work productivity. Mechanization of agricultural operations at the kolkhozes is provided for by the MTS which are located at the best-developed, in an agricultural sense, kolkhozes in the southern regions of the Republic.

During the period 1950 to 1955 alone, the tractors strength at the MTS and the LMC (Meadow Reclamation stations) of the Republic was more than doubled. There was a corresponding increase in the numbers of other agricultural machines. However, under the conditions of small plots of land and stony soil the effectiveness of utilization of agricultural machinery still remains low.

In 1953 alone, the mechanized reclamation and meadow reclamation stations and their detachments cleared and drained more than 1 thousand hectares of meadows, in addition they newly-constructed and rebuilt existing drainage networks on more than 3 thousand hectares of mineralized tillable lands. However, the volume of this work is still not sufficient. It is necessary to supply a large number of stone-picking machines, ditch diggers and meadow improvement machines to the rural economy.

The extent of mechanization of agricultural production and its growth is given by the data presented in Table XII on the following page.

Mechanization of agriculture in Kareliya, in spite of its great advancements, is still far behind the countrywide level. Many of the production processes in livestock raising are being electrified (preparation of feeds, watering, milking) at the sovkhozes and the leading kolkhozes on the Olonetskaya Plain and the Priladozh'ya (the Tel'man kolkhoz in the Sortavalskiy raion and others).

Table XII

INCREASE IN MECHANIZATION OF AGRICULTURE

Type of Farm Work	Ratio of Work Done by Machinery (% of Total Work)	
	1950	1953
Plowing	53.7	77.5
Cultivation	75.9	80.5
Sowing	30.0	45.2
Potato Planting	5.5	46.8
Threshing	61.4	79.9
Silaging	7.7	23.7
Haying	1.1	8.9

CROP HUSBANDRY

The proportion of agricultural crops in the total amount of planting done in the Republic in 1955 is characterized by the following data (in %):

Grain crop	47.0
Potatoes	12.0
Vegetables	1.4
Root fodder and silage crops	7.6
Domestic grasses	32.0

In comparison with the pre-Revolutionary period the proportion of grain crops has decreased from 92.1 to 47%, while all the remaining crops have increased. In comparison with the 1940 crop however, grain crops have increased somewhat while the ratio of fodder crops has decreased, the ratio of potatoes and vegetables remains practically unchanged.

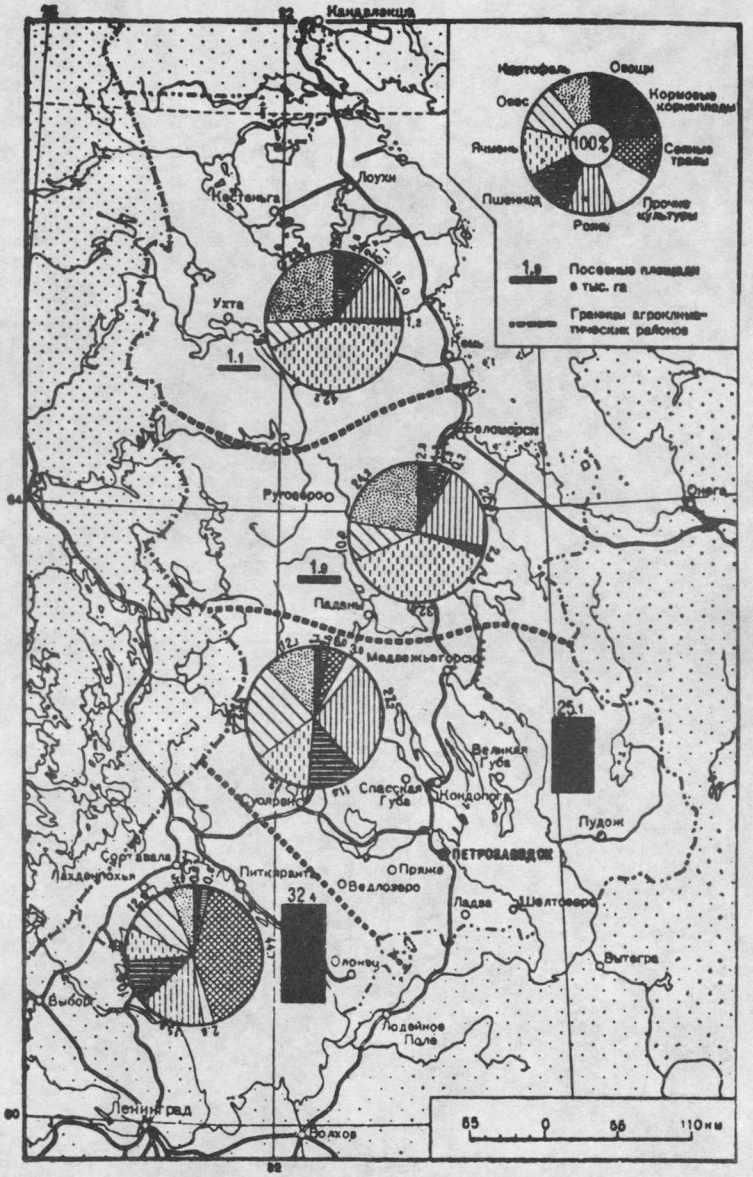

DISTRIBUTION OF SOWN AREAS & MAIN FARM CROPS OVER THE AGRO-CLIMATIC ZONES.

(in %, according to 1949 data)

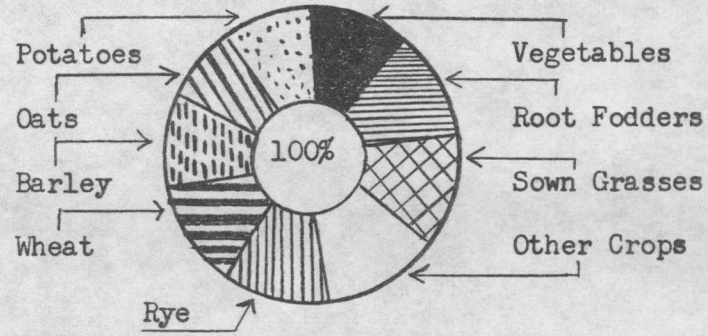

1.9 Sown areas, thousands of hectares.

Boundaries of Agro-Climatic regions.

Planted areas in the Republic territory are extremely irregularly distributed, this is accounted for by the significant natural and economic differences in individual sectors. The composition of sown areas is also characterized by vast differences in the separate sectors of Kareliya. These differences are clearly seen on inspection of the rural economy throughout the four following agricultural zones:

1. The northern sector of the Republic;

2. The central sector;

3. The southern part, and

4. The Priladozh'ya.

The distribution of sown areas under agricultural crops by zones is given in Table XIII on the following page.

Most of the sown areas are situated in the Priladozh'ya, in the southern sector of the Republic, which includes 95% of all the sown area. These regions contain 100% of the industrial crops and fall wheat, 99% of all domestic grasses and spring wheat, more than 97% of the oats, up to 95% of all fall rye and more than 80% of all potatoes, vegetables and barley planted.

The northern sector of the Republic has only 2% of all sown areas, while the central part has 3%. The composition of grain crops in the north excludes fall wheat, the industrial crops exclude flax, while such crops as spring wheat, peas, domestic grasses etc., are sharply curtailed.

The structure of sown areas in separate agricultural zones throughout the Republic can be seen from Table XIV on page 47.

Fall rye occupies the leading position in grain crops planted in the Republic (about 1/3 of all grain planted). A regional variety of fall rye is most widely planted, "Vyatka Standard", it is distinguished by high yield (18 to 30 centners per hectare). It is rather indifferent to soil conditions and is sufficiently winter hardy. Fall rye is the main fodder crop in Kareliya. However, wintering conditions are not always favorable for it, particularly in the northern regions.

Barley, which has a short-growing period, comprises 18% of the grain crops; in the northern and central sectors of the Republic it serves as the main agricultural crop, making up 40% of the sown areas and up to 2/3 of all grain crops. In southern Kareliya, barley is a fodder and industrial crop while in the north it is a food crop as well. The barley variety "Viner" is a favorite (it yields from 14 to 30 centners per hectare).

Oats take up 28% of the crop areas. This crop easily withstands the spring frosts which are characteristic of the climate in the Republic, it agrees with the high moisture content of soil and some of its varieties, for example, "Osmo", grows well on swampy and peat soils. Oats is the main forage crop in Kareliya. The best regional variety of oats, "Kyuto", is sown in all regions; in the south, the variety "Zolotoy Dozhd'" is also planted.

Table XIII

DISTRIBUTION OF SOWN AREAS BY CROPS IN VARIOUS ZONES

(% of sub-totals for 1950)

Crop	Northern Sector	Central Sector	Southern Sector	Pri-ladozh'ye
Fall Rye	1.3	3.5	55.3	39.9
Fall Wheat	---	---	0.6	99.4
Spring Wheat	0.2	0.8	48.3	50.7
Barley	6.9	9.5	49.0	34.6
Oats	0.6	1.9	57.0	40.5
Sub-Total, Grain Crops	1.9	3.7	53.1	41.3
Vetch as Grain	---	---	42.0	58.0
Peas	0.06	0.24	55.6	44.1
Sub-Total of Legumes	0.04	0.16	54.5	45.3
Industrial Crops & (lax)	---	---	54.0	46.0
Potatoes	4.9	8.2	53.3	33.6
Vegetables	4.8	8.2	48.0	39.0
Fooder Root Crops	6.1	10.7	46.1	37.1
Sown Grasses	0.15	0.15	9.2	90.5
Total, Crop	2.0	3.0	41.0	54.0

Wheat is represented in the north by the spring variety "Garnet", in the south by the variety "Diamant" and in the Priladozh'ya by the local variety "Velyutium". Because of its requirements for heat and soil conditions, wheat is planted only in the southern regions of the Republic: in the Prionezh'ya and Priladozh'ya. Fall wheat occupies only 0.5% of the sown areas, while spring wheat makes up 16%.

The work I.A. Petrov, a scientific co-worker at the Kareliyan branch of the Academy of Sciences of the USSR, is of great scientific and parctical interest. He has created new forms of grain and grain forage crops on the basis of original methods in vegetative hybridization; these crops are undergoing widespread production testing by the gossortset' (State Strained-testing Network) and at kolkhozes.

Table XIV

STRUCTURE OF SOWN AREAS IN AGRICULTURAL ZONES

(% of sub-total by zone, 1950)

Crop	North Sector	Central Sector	South Sector	Pri-ladozh'ye	Total in the Republic
Fall rye	15.0	22.6	27.2	15.3	20.4
Fall wheat	---	---	---	0.5	0.3
Spring wheat	1.2	2.5	11.6	9.5	10.0
Barley	42.7	32.6	13.1	7.2	11.2
Oats	6.1	10.0	23.5	12.9	17.0
Vetch as grain	---	---	0.2	0.3	0.3
Peas	0.1	0.2	3.6	2.2	2.6
Sub-total, grains & legumes	65.1	67.9	79.2	47.9	61.8
Industrial (flax)	---	---	0.1	0.05	0.1
Potatoes	25.8	24.2	12.1	5.9	9.4
Vegetables	2.4	2.3	1.1	0.6	0.9
Fodder root crops	4.3	4.3	1.5	0.85	1.3
Sown grasses	2.4	1.3	6.0	44.7	26.5
Total	100.0	100.0	100.0	100.0	100.0

In the south of the Republic, legume crops are represented by peas of the "Kapital" variety (food crop) and by vetch. Because of their requirements for soil and temperature conditions, these crops are not widely planted in Kareliya, particularly in the northern and central sectors. Fall crops make up about 1/3 of the grain and legume crops planted in the Repulbic, while spring crops make up about 2/3. In recent years spring crops have increased and fall crops have decreased. This has considerably deteriorated the labor situation in the rural economy. The most immediate task is the expansion of fall rye planting by 1½ to 2 times and the reduction of spring grain crops. Domestic grasses occupy second place in the grain crops planted (32% of sown areas). Ninety per cent of the domestic grasses sown are concentrated in the Priladozh'ya. Timothy and alsike clover are planted both separately and as mixed crops. Grass is also grown for seed in the Priladozh'ya.

The Biological Institute of the Kareliyan branch of the Academy of Sciences has discovered and produced local varieties of cereal grasses and legumes which give high yield during a comparatively short growing season. On the basis of these local varieties, the Biological Institute has made up grass mixtures, composed of several components, which it recommends to the kolkhozes and sovkhozes as being the most productive. There must be a considerable increase in the ratio of perennial grasses planted throughout the Republic

Of the root crops, turnips and radish are the most suitable under the natural conditions of the Republic, however, they are not as yet of importance in crop rotation. Such newly introduced silage crops as corn will be of considerable importance in the Republic. A two-year experiment in corn planting in the Republic has proved the feasibility of raising this crop for green feed and silage in the southern sector. Thus, in 1954 the kolkhoz "Vpered" in the Pudozhskiy raion obtained a green feed yeild of 990 centners per hectare. In 1955, the sovkhoz "Zyatsev" produced 520 centners of green corn fodder from 1.5 hectares of well-husbanded plots, i.e., 10,600 feed unites. In the adverse weather conditions of 1955, average and even good yields of green corn fodder were obtained from the well-husbanded sectors of friable, sandy-loam and light sandy-clay soils; these soils warm up better and are more porous.

Potatoes are an important food crop in the Kareliyan ASSR, this crop takes up 12% of all planted areas and is grown in all regions. Potatoes are used as fodder for cattle to a limited extent mainly in the fall when the crop is being gathered in. The most suitable varieties for the Republic are the "Berlikhingen" and "cobbler".

Vegetable raising is a new branch of plant husbandry which has not yet received sufficient development. Only 1.4% of all planted areas are as yet under vegetables. The main vegetable crop is white cabbage (it makes up 95% of all vegetable crops). Among the vegetables raised by way of an experiment are cauliflower, marrow pumpkin, tomatoes, and the such aromatic crops as dill, celery and parsley.

The kolkhozes and sovkhozes in the southern regions have included fruit orchards and berry patches in recent years, these utilize the new varieties of fruit crops created by I.V. Michurin and his followers. In recent years fruit growing has been carried out in separate experiments right up to the Loukhskiy raion. Three extensive fruit tree nurseries are playing an important role in orchard development in the Republic, these are situated in the Prionezhskiy, Pudozhskiy and Sortaval'skiy raions. These nurseries assist in the planting of fruit trees and bushes, as well as berry shrubs, at the kolkhozes.

Many of the kolkhozes in the Republic have been very successful in raising food. Thus, the "Tel'man" kolkhoz in the Sortavalskiy raion plants selected varieties of grains and potatoes; in the fifth five-year period its grain crop yield was from 17 to 23 centners per hectare as against 8.4 centners per hectare in 1946; that of potatoes was 126 to 172 centners; of vegetables 130 to 345 centners, and perennial domestic grasses from 20 to 34 centners per hectare. Fluctuations in yield is associated with the inadequately developed methods of crop rotation. Individual brigades in the better kolkhozes obtained rye yields of from 24 to 34 centners per hectare.

New farming methods are being widely introduced; some of these are: vernalization; planting selected seed; seed drying; spring warming of grain for germination purposes; addition of organic and mineral fertilizers to planted crops; drag harrowing of fall rye and artificial pollination of rye;

use of plows fitted with skim-coulters; stubble scuffling; fall plowing; chalking of soil and increasing the depth of the plowed layer to 20 and 22 centimeters etc. In 1954, the squared-section and rectangular methods of planting potatoes and vegetables were introduced.

Proper crop rotation is being followed in a number of the kolkhozes (7, 8, and 9 field rotations).

(Footnote: An 8-field rotation would include the following successive crops: 1. black summer fallow; 2. fall crop with perennial grass; 3. the first year of perennial grass; 4. second year of perennial grass; 5. spring wheat; 6. potatoes; 7. barley and legumes; and 8. oats).

Pasture rotation is still little used. Besides introduction of pasture rotation, the inclusion in these rotations of sectors of low-lying land a low yield dry bottom is of great importance in improving the fodder base for livestock.

Since 1954, some of the farming methods recommended by the kolkhoz scientist T.M. Maltsev have been introduced on an experimental basis.

ANIMAL HUSBANDRY

Animal husbandry is the leading branch of the rural economy in the Karel'skaya ASSR. Its importance in the monetary income of the farming kolkhozes in the Republic may be inferred from the fact that in 1950, animal husbandry produced 46% of monetary income, plant husbandry produced only 18.5%, the remaining incomes came from other sources (bush work, subsidiary enterprises, etc.). At some farming kolkhozes the income from animal husbandry is even higher and amounts to 70% and more. Thus, at the "Tel'man" kolkhoz, the income from animal husbandry in 1954 amounted to 83.2% of the total monetary income.

A comparison of labor expenditures in kolkhoz production with the structure of monetary incomes shows that the income to kolkhozes from animal husbandry is approximately 4 times greater than that from plant husbandry.

(Footnote: In 1950, of all work-days in the kolkhozes, 46.7% went to plant husbandry and 30.2% went to animal husbandry).

Table XV on the following page shows the composition of the livestock herds in per cent of total as of the 1st. of January of the corresponding year.

The ratio of cattle has grown to 70% of all livestock. This ratio is even greater in the sovkhozes where it reaches 72%.

TABLE XV

COMPOSITION OF LIVESTOCK POPULATION EXPRESSED

AS A RATIO TO STOCK POPULATION

(in %)

Species of Livestock	1940	1950	1955
Cattle	51.5	62.0	71.3
Horses	30.8	26.5	22.0
Sheep & Goats	11.4	9.4	1.4
Swine	2.3	1.8	4.9
Reindeer	4.0	0.2	0.4

According to the data available for 1955, the monetary incomes to kolkhozes from animal husbandry were distributed in the following manner (in %):

Cattle	59.3
Hog raising	28.4
Sheep raising	5.0
Draft animals (Horse raising)	4.7
Poultry	2.5
Beekeeping	0.1

As can be seen from the Table given above, the most profitable animal husbandry in the kolkhozes of the Republic is that of cattle and swine.

Most of the livestock of all species, with the exclusion of reindeer, are concentrated in the southern sector of Kareliya, including the Priladozh'ya.

The 1950 distribution of livestock throughout the different agricultural zones is reflected in Table XVI on the following page.

TABLE XVI

DISTRIBUTION OF LIVESTOCK THROUGHOUT

AGRICULTURAL ZONES

(% of Sub-totals in the Republic)

Species of Livestock	Northern Sector	Central Sector	South Sector	Priladozh'ya
Cattle	5	8	58	29
(incl. cows)	6	11	53	30
Horses	4	6	48	42
Swine	2	4	59	35
Sheep & Goats	5	8	59	28
Reindeer	100	--	--	--

The livestock breeds in the Republic are extremely varied. The most common breed of cattle is the "Ostfriz" (East Friesian) and the "Kholmogorsk" breeds, these make up the bulk of the cattle herds. In addition, in the northern and central sectors of Kareliya the "Vostochnofinskaya" (Eastern - Finnish) breed has been propagated, while in the south-east the "Yaroslav" breed has been propagated.

The proximity of various cattle breeding grounds to the Republic has had a pronounced effect on the distribution of these breeds in the raions. For example, the proximity of the Archangel Oblast' has influenced the introduction of the Kholmogorsk breed of cattle into the Kemskiy, Belomorskiy and Medvezh'egorskiy raions. The Vostochnofinskaya breed predominates in the northwest. The Yaroslav, Kholmogorsk and Ostfriz breeds are widely distributed throughout the Zaonezhskiy and Pudozhskiy raions. The Ostfriz breed predominates in the Priladozh'ya regions.

The reproduction of the Vostochnofinskaya breed under Kareliyan conditions is of particular importance. This breed is very well adapted to local conditions and with proper care can produce high milk yields with high butter-fat content (up to 5%).

The sheep strain is more uniform than that of cattle. The "Romanov" and its crossbreeds predominate. However, even with proper care this breed is not very productive. The "Tsigeian" breed is now being propagated in the south-western regions of the Republic together with the Romanov breed.

A large white variety of hog predominates in the swine herds, it is characterized by high productivity under local conditions.

In 1940, the reindeer herds at the sovkhozes and kolkhozes of the Republic numbered more than 10 thousand head. The task of establishing reindeer herds is of great national economy significance in the northern regions. The main winter food for reindeer is reindeer moss (Cladonia) and twigs, in summer the reindeer feed on reindeer moss, grass and fungi. Pine-white-most complexes with a heavy cover of reindeer lichen occur over great areas in the extensive forest tracts of the Kaleval'skiy, Loukhskiy and part of the Rugozerskiy raions. Lichens such as these are particularly suitable as reindeer pastures, they are capable of maintaining considerably greater reindeer herds, even more than double the prewar numbers.

Domestic reindeer are kept at the present time at some of the kolkhozes in the Loukhskiy and Kemskiy raions. The only reindeer breeding sovkhoz in the Republic is located in the Kemskiy raion.

The livestock herds have increased considerably during the postwar years. However, up to the present time the number of head of the main species of livestock have not yet reached the 1940 level. In comparison with the prewar years the area of agricultural lands has increased, for this reason the numbers of livestock in relation to the area of agricultural land (plowed fields, pastures, meadows and pastures) are lower than in the prewar period. This index for different species of cattle in the Republic is characterized by the following data:

Number of head of livestock per 100 hectares of agricultural land

Species of livestock	1940	1950	1955
Cattle	21	8.6	10.2
Of this, cows	12	2.5	5.1
Horses	10	2.9	2.6
Sheep and Goats	19	5.6	1.8
Swine (per 100 hectares of plowed area)	8	2.1	13.0

The main reasons for the lag in increase of livestock herds are the great wartime losses, the postwar difficulties with labor force and the insufficient utilization of the fodder base.

The backwardness in animal husbandry has been overcome in the better kolkhozes of the Republic. The "Tel'man" sovkhoz in the Sortaval'skiy raion is best populated with livestock in relation to the area of agricultural fields. There are 40 head of cattle (of which 16 are cows) per 100 hectares of agricultural fields at this kolkhoz. In 1955, the kolkhoz obtained 445 centners of milk and 34.5 centners of beef (dressed weight) per 100 hectares of agricultural lands. At some kolkhozes, themilk yield in 1955 was more than 2,000 liters of milk per foraging cow. The Republic's sovkhozes obtained 25 hundred liters of milk per foraging cow.

On the whole, however, the milk production in the Republic, although it does exceed the prewar level, is still low. Thus, the average milk yield per foraging cow in 1940 was 730 liters, while in 1955 it was 957 liters; this indicates that the milk production of the herds is unstable.

Animal husbandry in Kareliya will be greatly improved when the experience of the better kolkhozes and sovkhozes is made available throughtout the rural economy.

Bookkeeping is the newest branch of the rural economy in the Republic. It began in 1935 and was completely extinguished during the war period. At the present time it is being revived. Its main region is the Olonetskaya Plain and the northern Priladozh'ya.

SPECIALIZATION IN THE RURAL ECONOMY

The rural economy of the Karel'skaya ASSR is multilaterial with animal husbandry as its leading branch; under local natural and economic conditions this branch has had the greatest impact on the national economy.

In addition to the products of animal husbandry, the rural economy of the Republic must supply the basic needs of the population in such relatively intransportable products as potatoes and vegetables, the raising of which is favored by local conditions.

The rural economy has the following peculiarities in different zones. In the northern sector it is of a clearly expressed dairy-beef line, with plant husbandry playing the subsidiary role. The north of the Republic has only 2% of the sown areas and 6% of the dairy herds. Spring crops predominate in field crop rotations, these make up 85% of all sown areas. Basic agricultural crops are potatoes (for food) and barley.

The rural economy in the central sector of the Republic differs from that in the north by considerably more extensive planting of potatoes, vegetables and fall crops (up to 1/4 of all sown fields are in fall rye). This region has larger dairy herds as well; 11% of all cows are in this sector.

The southern sector is characterized by a much higher percentage of grain crops (up to 80%); more than 1/3 of these are made up of fall rye. Oats (57% of all that planted in the Republic) and barley occupy more than 1/3 of all the sown areas in the Republic and are outstanding amongst the spring crops. In this area there is 4.5 hectares of plowed land per kolkhoz farmstead, while at the same time there is only 1.5 hectares per farmstead in the northern region and in the Priladozh'ye there are 8 hectares. Animal husbandry in the southern sector is of the dairy and beef type. A suburban type of rural economy has developed in the vicinity of Petrozavodsk and other cities. Perennial grasses and corn for silage will be planted over a greater area in the near future to supply the expanding animal husbandry economy. It is vital that market gardening be developed in the suburban areas and on the Zaonezhskiy peninsula.

The rural economy in the Priladozh'ye is of a special nature and differs from that in other zones. Grass cultivation is best developed here in comparison with other sectors of the Republic; grasses make up more than 2/5 of the sown areas in the Priladozh'ye and 90% of the total sown areas to grass in Kareliya. Nearly 100% of all fall wheat, vegetable seed crops and grass are concentrated in this sector; potatoes have the lowest ratio in the crop cycle. The kolkhozes and sovkhozes of the Priladozh'ye carry on a multilaterial economy. The best marketable branches are the dairying industry (fresh milk near consumer areas and production of cream, cottage cheese, butter etc. in the more remote regions) and swine raising. Market gardening is also being increased, particularly in the production of early vegetables.

TRANSPORT

In considering transport it is necessary to consider first of all the Republic's position on the routes between the Baltic, Barents and White Seas. Railroads and the White Sea-Baltic Canal interconnect these Seas and their basins. The Republic's railroads also provide communications for the Kola peninsula and the northwest with the other regions of the USSR, thus, they carry a great volume of freight.

The configuration of the Kareliyan territory, stretching from the north to the south, the distribution of industrial centers and the development of branches of industry which produce large tonnage products (timber, mining products and fish), determine the peculiar nature of transport in the Republic economy.

According to data for the prewar years, the extent of yearly freight haulage by railroad (as determined by shipments) came to about 7 tons per person of population as against 3 tons on the average for the Soviet Union. In the postwar years the freight turnover has grown considerably.

Transport has played and continues to play a most important role in the development of the natural resources of the Republic and the economic development of its raions. In the past, Kareliya was partically without roads. As recently as 1915 there was only one small railroad line in the Kareliyan Republic, this connected the city of Serdobol' (Sortavala) with Vyborg. Construction of the Murmansk railroad (Kirovsk) was begun during the First World War, the southern portion of this railroad from Zvanka (Volkhovstroy) to Petrozavodsk, a distance of 280 kilometers, was opened in January of 1915. Construction of the railroad was completed in a year and a half and traffic along its whole length was initiated in 1916. However, the railroad was actually not completed; this was a temporary road and it lacked many finishing touches. The earthworks and ballasting of the roadbed were only 50 to 60% completed, the track was unstable with grades of up to 30%. Therefore, the road was able to carry trains of comparatively small weight at speeds of 15 to 20 kilometers per hour and could take no more than 200-240 freight cars per day. The almost complete absence of any spurs whatsoever on the railroad seriously limited the Murmansk railroad for Kareliya and made it a purely transit route.

During the Soviet years a network of railroads, auto roads and waterways for communication have been built. Railroads now pass through 15 of the 18 Administrative raions in the Republic. Only three regional centers are now situated more than 100 kilometers from a railroad.

The total length of railroads in the Karel'skaya ASSR now exceeds 1600 kilometers, this amounts to 9 kilometers per thousand sq. km. of territory as compared with 5 kilometers on the average for the Soviet Union.

About 1/3 of the railroad network in the Republic was built after the October Revolution; the remaining 2/3 has been so thoroughly rebuilt that it is essentially the offspring of Socialistic construction.

The rebuilt Kirovsk railroad has been converted into a major transportation trunk line. The profile of the road on different sectors in the Republic and the abundant sources of cheap hydroelectric power permit consideration of the expediency of converting it into an electric railroad throughout its length.

(Footnote: The sector of the railroad from Kandalaksha to Murmansk, located within the borders of the Murmansk Oblast', has already been electrified). This railroad is approximately 850 kilometers long within the borders of the Republic (from the station at Revsel'ga on the south to the station Poyakonda on the north.) Two great railway lines connect up with this trunk line. One of these, the Sorokskaya (Belomorsk) to Obozerskaya connects the northern portion of the Kirovsk and the northern railroads; its total length amounts to 353 kilometers, of which 140 kilometers lie within the Republic. The second line runs from the station at Tomitsa (7 kilometers north of Petrozavodsk) through Suoyarvi to Sortavala, Elisenvaara, Khitola, Priozersk and Leningrad. The total length of this line to Leningrad is 546 kilometers (as compared with 407 kilometers for the Kirovsk railroad), of which about 370 kilometers lie within the Republic.

The railroad from the station at Sorkskaya to Obozerskaya, running along the southern coast of the Onezhskaya Guba on the White Sea, was built at the end of 1941, when part of the Kirovsk railroad was on occupied territory. This line was particularly important during the war as it connected the Kola peninsula and the northeastern part of Kareliya with the interior regions of the nation. The railroad line from Tomitsa to Suoyarvi was built in 1940. It connects Petrozavodsk with the northern Priladozh'ye and serves as a second route out of the Republic to Leningrad. This route is even more important in the Republic because it connects Petrozavodsk with Olonets. The branch to Olonets begins at the station Yanis'yarva and provides a railroad route out of the greatest agricultural region in the Republic, that of the Olonetskiy Plain.

The remaining railroad branches are much shorter. Of these, mention must be made of the line from Matkasel'kya to Vyartsilya (a metallurgical center) and the branch from the station at Elisenvaara. In the northern part of the Republic, mention must be made of the timber hauling route from Loukhi to Kesten'ga, which was completely rebuilt in 1956, as well as the branch from Kem' to Rabocheostrovsk.

The wide-gauge railroad branches are joined by a number of narrow-gauge branches which are used for timber deliveries.

A large new railway-building project is the Zapadno-Karel'skaya railroad, the construction of which will create favorable conditions for exploitation of the enormous timber tracts in western Kareliya. The first sector of this road is already in use from Suoyarvi to Sukkozero for a distance of 141 kilometers (through Suoyoka, Naysten'yarvi, Porosozero, Akon'-yarva and Gimoly).

The Directives of the Twentieth Congress of the CPSU foresee the construction of the second stage of this railroad up to the station at Yush-kozero during the sixth five-year plan.

Double tracks are expected to be laid on the Apatity to Sorokskaya sector of the Kirovsk railroad.

Railroads carry about 80% of the freight in the Republic and most of the passengers. Freight turnover on the Kirovsk railroad in 1951 exceeded the 1940 level by 16%. Main freight is timber and timber products, paper, cellulose, mineral building materials, fish and mineral fuel. Timber freight and mineral construction materials make up 60 to 70% of freight handled.

The Kirovsk railroad occupies a special place in the movement of paper and forest products. It is in fourth place amongst all railroads in the nation in terms of carrying timber products and it handles up to 30% of all paper shipments in the Soviet Union.

The bulk of the timber freight goes in a southerly direction (to Petrozavodsk and Lodeynoye Polye) to Leningrad, the northwestern Oblast's, the Baltic Republic and the Donets and Podmoskovnyy coal basins. Pulpwood passes through Suoyarvi and Elisenvaara to the cellulose enterprises in the Kareliyan isthmus. There is a smaller flow of timber freight in Murmansk. The products of the main branches of industry in the Karel'skaya ASSR move in a southerly

direction: paper-cellulose, saw timbers and prefabricated housing. Mineral building materials and a large quantity of transitory freight from the Murmansk Oblast', (apatite, nephaline, fish, iron ore, imported freights etc.) also goes south.

Manufactured goods and foodstuffs as well as consumer goods are delivered from the south along the railroad lines to the Republic.

Intra-Republic railroad freight transfers are also mainly in a southern direction (towards Petrozavodsk and the cities on the shores of Lakes Ladoga and Onega).

The average distance of shipment along railroads in the Republic is higher than it was in the prewar period, this is the result of development of new industrial centers in the more remote regions.

The most important internal waterway in the Republic is the White Sea-Baltic Canal which was built during the year of Soviet rule. This Canal is one of the most remarkable projects in the USSR and was the greatest project in Kareliya. It was built in 20 months, from 1931 to 1933.

The Canal begins at the town of Povenets and ends at the city of Belomorsk. The overall length is 227 kilometers, of which 37.1 km. are artificial navigable channels. The Canal waterway includes the Vyg and Povenchanka rivers as well as the Lakes Vygozero, Volozero, Yuzkoye, and Matkozero. The Canal has 19 locks, 15 dams, 49 levees and so on. The watershed high-water mark reaches 102 meters above sea level. The navigation period on the Canal lasts for 165 days (from mid-May to the end of October), and its total load capacity is 3 to 4 million tons per year in one direction.

The most remarkable construction on the Canal is the Povenchanskaya Locks (at the southern end of the Canal), consisting of 7 locks which raise ships 70 meters above the level of Lake Onega. The overall length of this sector is 12 kilometers. Part of the watershed sector of the Canal is an artificial waterway and part of it follows the Lakes Volozero and Yuzkoye. There are 11 locks at the northern end of the Canal, here also are the largest dams. The Canal is of enormous economic significance: it provides an internal water route between the seas of the European sectors of the USSR and it shortens the water route between Leningrad and Archangel from 5167 km. (around the Scandinavian peninsula) to 1248 km. The Canal is of great importance to the Republic itself. Having cut across the Onega-White Sea watershed, it created the necessary conditions for utilization of the forest, mineral and hydroelectric resources in the central part of the Republic, it facilitated the economic growth of old and new cities and ports along its length (Belomorsk, Nadvoitsi, Segezha, Medvezh'egorsk).

In connection with the fact that some of the construction on the Canal is now out of date, the reconstruction already begun will be continued during the sixth-five-year plan. Wooden structures will be replaced with metal construction and partially by reinforced concrete; all locks will be electrified as well as the communities at the locks. During the sixth five-year plan, freight transfers along the Canal will be increased by 1½ times.

Practically all the rivers in Kareliya are unnavigable due to their numerous rapids. Only the estuary sectors of the Kem', Olonka, and Vodla rivers are accessible to shallow-draft vessels. Of the entire river network in the Republic, no more than 100 km. of its total 57 thousand kilometer length is navigable. However, the timber floating importance of the rivers is much greater than is their navigation potential. About 4 thousand kilometers of river routes are used for timber floating, whereas the total length of the rivers so used is 28 thousand kilometers. Of the interior water reservoirs, Lake Ladoga and particularly Lake Onega are of great importance to navigation. These are deep waterways which are suitable for navigation by lake and sea-going boats. These lakes are important transit routes due to their connection (Via the Vytegra river) with the Volga-Baltic water system and (via the settlement of Povenets) with the White Sea-Baltic water system. In addition, the Lakes Ladoga and Onega are of great local significance, since the economically best-developed raions of the Republic adjoin them. The scheduled freight and passenger steamship line from Leningrad to Petrozavodsk through Medvezh'egorsk plies along these Lakes. There are scheduled trips from Petrozavodsk to other points situated on the Lake Onega shore. It is planned to organize a passenger line from Vytegra to Petrozavodsk, Medvezh'egorsk and other points. Navigation on the waterways of the Republic is carried out by boats of the Belomorsko-Onezhskovo Steamship Line, which is a large transport enterprise. Transfers along Lake Onega, the White Sea-Baltic Canal, the White Sea and along the navigable rivers have increased considerably; these increased by 300 thousand tons in 1955 alone. During the fifty five-year period the freight turnover of the Belomorsko-Onezhskovo Steamship Line increased by 86%. The size of the fleet increased by 40% and its freight capacity increased by 2.8 times. The passenger lines are now served by comfortable motor ships. The method of pushing the boats as a piloting technique has been taken into use, it is giving excellent results, including on the lock sectors (Povenets to Belomorsk).

Navigation on the Lakes Onega and Ladoga has a number of peculiarities. In the spring and fall, Lake Ladoga has frequent storms and gales, as well as thick fogs. Lake Onega also has thick and prolonged fogs during the spring and fall. The channel on some sectors of Lake Onega is very narrow and torturous (the reef-infested Sennogubskiy Proliv, and the western sector of the Zaonezhskiy Zaliv.) A great deal of work has been done on channel marking (setting out of beacons, buoys, etc.) this, together with the great ezperience of the local pilots, ensures regular and safe sailing.

Now, with the opening of the Volga-Don navigation canal, which was made after V.I. Lenin, the waterways of Kareliya are connected with five seas of European USSR through the Volga-Baltic water system.

The main stream of freight over the Lakes Onega and Ladoga, as along the railroads, passes from north to south. It is made up mainly of timber freight and mineral building materials (diabase, quartzites and granite). Manufactured goods, foodstuffs and consumer goods are shipped from the south northwards. The most important freight docks on Lake Onega are at Petrozavodsk, Solomennoye, Kondopoga, Tolvuya, Medvezh'egorsk, Shala, Shokshinskiye Quarries, Ropruchey and Chelmuzhi; while on Lake Ladoga these are at Sortavala, Lakhdenpokh'ya, Pitkyaranta and Vidlitsa.

Of the other lakes, Vygozero is most significant for transportation. Scheduled lines connect the city of Segezha with the town of Sennaya Guba and Vozhmogora (Valday), from where raw timber is shipped to the Segezha paper-cellulose kombinat. These communities receive goods, machinery and equipment for the logging industry via Lake Vygozero.

Regular freight deliveries have also been organized on Lake Segozero. These connect the settlement of Padany and the dock at Sondaly with Velikaya Guba, where timber is transshipped onto the auxiliary railroad line running to the station at Masel'ga and the Kirovsk railroad.

Shipping lines on the Kyuto Lake system connect the Kalevala raion center of Ukhta with the shore stations. The expensive lakes in the north of the Republic, Topozero and Pyaozero, are provided with regular navigation to a lesser degree. Shipping on these lakes is not of a scheduled nature and it serves the needs of the rural consumer cooperatives and shore logging points. The same irregular type of transport is also provided in the south and southeast of the Republic on Lakes Syamozero and Vodlozero.

Economic development needs deep within the Republic demand the organization of regular shipping along Lakes Topozero, Pyaozero and Vodlozero. It is necessary to create a special fleet of boats which are suitable for servicing the small communities and forestry settlements on these Lakes.

Shipping on the White Sea, along the Kareliya coast, is carried out by coastal transports plying between the Republic's ports and those of the Archangel and Murmansk Oblast's. These shipments are not of significant size because of the sparse settlement of the White Sea coast, also, all the important centers on the seacoast are connected by railroad at the present time. There is a predominance of timber materials, fish industry products and goods required by the fishing kolkhozes in the freight carried by coastal transports.

Auto transport is fundamental for many sectors of the Republic. During the years of Soviet rule, many important truck roads have been built, these connect the remote regions with the Kirovsk railroad and the larger economic centers. Local roads have also been improved, thus providing communications for the raion centers with the periphery.

The total length of railless roads of only Soviet and Republic construction amounts to 11 thousand km., about half of which is graded road or road with an improved surface (including tar and asphalt). However, even at the present time many raions in the central and northern sectors of the Republic are not sufficiently well provided with railless roads which are suitable for year round use. The Karel'skaya ASSR is not as well supplied in this sense as are the neighboring Oblast's in the northwest (9 km. per 100 sq. km. of territory as compared with 20 km.). Of the freight hauled by truck transport, the most important is logs which are delivered to the floating points and railroad sidings, the products of woodworking enterprises and building materials, rural economy produce and liquid fuel for the MTS, trucking and other enterprises.

Autobus intercity communication has been well developed in the Republic. Total length of autobus routes is about 3 thousand kilometers. The bus routes out of Petrozavodsk, Medveh'egorsk, Kondopoga, Sortavala and Olonets have been particularly well developed. The bus lines from a number of other towns also run far beyond the town limits, providing services to the urban population.

The road from Petrozavodsk to Pryazha to Impilakhti to Lyaskelya to Sortavala (260 km.) must be included in the roads which carry the greatest amount of freight. This road runs through Kurkiyoka to the Leningrad Oblast' border (towards Priozersk and Vyborg). An old section of road runs from Pryazha between Petrozavodsk and Olonets, this stretch continues along Lake Ladoga and connects with the improved road from Sortavala. These roads are of great importance for shipment of agricultural produce and the products of industrial enterprises situated in this area, as well as communications with the Leningrad Oblast'.

The urban settlements in the Prionezh'ya are connected by the Petrozavodsk - Kondopoga road (60 km.), Kondopoga-Medvezh'egorsk road (124 km.) and the Medvezh'egorsk-Pudozh road (228 km.). Whereas, the first two of these roads are subsidiary to the railroad line, the last named roads serves as the only means of communication in winter, it connects Pudozh with the other points in the Republic and with the railroad trunk line. The trunk highways from Kem' to Ukhta (182 km.), and Loukhi to Kesten'ga to Tungozero run out from the Kirovsk railroad. The Zaonezh'ya is connected by railroad line with the Velikaya Guba and Medvezh'egorsk, this rail line is supplied with regular autobus service along all its length. Autobus lines connect with the railroad from Pindushi (Medvezh'egorsk Station) and Povenets. The road from Pudozh to Kargopol' connects the Karel'skaya ASSR with the Archangel Oblast'.

Air transport is acquiring increasing significance. There are regular air flights between Petrozavodsk, Leningrad and Moscow, Petrozavodsk and Archangel as well as within the Republic. Air transport also meets the requirements of the scientific, geological, forest, and fishing organizations and the medical services. The greatest transportation hub in the Republic is Petrozavodsk; it is the meeting place of the railroads, water routes, highways and airlines.

Large transportation hubs on a local scale are Belomorsk (railroad, sea, interior water and automobile transport), Sortavala (railroad, lake and automobile transport).

ECONOMIC TIES OF THE KAREL'SKAYA ASSR WITH OTHER REGIONS OF THE SOVIET UNION

The nature of the economic ties of the Republic with other regions of the Soviet Union is conditioned mainly by the peculiarity of its national structure. The inter-raion exchange of goods within Kareliya, having grown in 1950 to more than double that of 1949 is characterized as follows:

(a) The predominance of exports over imports (by weight);

(b) the sharp predominance of industrial freight (98%) in exports, of which, forest products are predominant; there is a steady growth in the export of manufactured goods and semi-finished products (paper, boxes, craft bags, prefabricated houses, cellulose, veneer, sawmill timber, sleepers, processed mica, crushed pegmatite, fish products, etc.);

(c) the increase in importas of agricultural products and consumer goods (1/10th of all imports by weight) in response to the population growth and the satisfaction of their needs;

(d) the predominance in imports (about 2/3 by weight) of mineral fuel, machines, metal and construction materials (cement, lime, glass).

Part of the imported freight will be replaced in the future by local products in conjunction with the growth of the rural economy, the utilization of peat as local fuel, the manufacture of cement and lime from local raw materials and so on.

The Republic's exports by weight consist of more than 70% timber and its products (paper, prefabricated houses, boxwood, craft paper, etc.). Next in importance in exports are mineral raw materials and semi-processed products (processed mica, pegmatite flour etc.) as well as building stone and brick. This group of goods makes up 1/8 of the total tonnage of freight hauled out of the Republic. In addition, logging machinery and metalwares are exported to other regions of the nation.

Thus, the relatively small, by population, Karel'skaya ASSR takes an active part in the economic life of the nation. By taking advantage of its natural wealth, the peculiarities of its geographic position and the work habits of its people, the Republic plays an important role in the development of a number of branches of the national economy in the Soviet Union.

Construction timber, prefabricated housing, building stone, paper, pegmatite, trucks, skidding windlasses, and many other wares go from Kareliya to other regions.

In its own turn, the Karel'skaya ASSR receives metalwares, building materials, mineral fuel, production equipment, various machines and mechanism from various oblasts of the Soviet Union.

The economic ties with the northwest, the northeast and the central sectors of the RSFSR are of fundamental importance to the Republic. Kareliya is part of the northwestern economic complex and half of its extra-Republic ties are with the Leningrad Oblast' and other regions of the northwest RSFSR. Economic ties with the Baltic Soviet Republics and the Kaliningrad Oblast' are being extended, these receive produce from the woodworking and paper industries of Kareliya.

Communications between Kareliya and the Murmansk Oblast' have been expanded in the postwar years. This was favoured by the increased economic development in both of the northern sector of the Republic and in the Kola Peninsula, the processing of Murmansk mica in Kareliya and supply of brick from Kareliyan plants and supply to the Murmansk Oblast'.

Economic ties with the northestern economic region have increased greatly in the postwar years, they now are second in importance in extra-Republic freight turnover. During the prewar years, these economic ties were insignificant. This improvement was made possible by the construction of the railroad from Belomorsk to Obozerskaya. The Northeast supplies the Karel'skaya ASSR with Pechorin coal, limestone and gypsum. On the other hand Kareliya supplies the northeast with logging equipment.

The increase in economic exchange with the Murmansk Oblast' and the Northeast is having an influence on the growing role of the Republic in the northern economy of the European part if the Soviet Union.

During the prewar years, only 1/3 of all extra-Republic freight turnover was with the Northwest, the Northeast and Central RSFSR which lie relatively close to the Karel'skaya ASSR whereas today, this makes up 4/5 of all freight turnover. The eretofore insignificant exchange with the Volga region will increase following the reconstruction of the Volga-Baltic waterway.

At the same time there has been a considerable decrease in the postwar economic ties with the southern regions of the European sector of the USSR (the lower Don and the Ukraine SSR). This is associated with the curtailment of unprofitable, distant shipments.

The economic ties of the Republic with other regions are not limited simply to import and export of the stated freights. Another form is, for example, the participation of Kareliyan fishing organizations simultaneously with the organizations of the Murmansk and Archangel Oblast's in the fishing trade on the Barents Sea and in the North Atlantic. Future economic development of the Republic is directed to further improvement in the economic ties with the surrounding Oblast's of the RSFSR. The increased scale of logging in the Republic and the improvement of its water and railroad routes, as well as curtailment of timber deliveries from Siberia to the European sector of the Soviet Union will facilitate the shipment of Kareliyan timber into new regions. Export of stone building materials shouls also increase considerably. In addition, bilateral economic exchange between this Republic and the Baltic Republics is being fundamentally expanded.

THE INTERNAL ECONOMIC DIFFERENCES OF THE KAREL'SKAYA ASSR

Pre-revolutionary internal economic ites on the territory of the present Karel'skaya ASSR were insignificant. The cities of the former Olonetskaya Province and the Kemsk District of the Archangel Province were economically undeveloped and exerted practically no influence on the surrounding territories. The economic ties between the widely separated sectors of pre-revolutionary Kareliya could not be appreciably developed due to the almost complete absence of roads. The development of transportation during the Soviet period has, to a considerable degree, eliminated the road - less conditions, and railroads and highways have connected the remote sectors of the Republic.

In recent times, several economic-manufacturing centers have been formed on Kareliyan territory, these have well-developed economic ties with the surrounding territories. Timber processing points are of particular importance amongst these centers.

Separate sectors of the Republic are characterized by different levels of economic development of their natural resources, different transport-geographic position, various levels of development of the main branches of the economy and the nature of their economic lines of communication.

Corresponding with this, the separate sectors of the Republic differ from one another in the composition of their branches of economy and the extent to which their economy is multilaterial, as well as in their tasks for further development. There are four such sectors in the Republic (four groups of Administrative raions): 1. Southwestern Kareliya, or the Severnoye-Priladozh'ya; 2. Southern Kareliya, or Prionezh'ya; 3. Central Kareliya, and 4. Northern Kareliya. The law of planned (proportional) development of the national economy is expressed in this economic differentiation of the Republic's territory, and in the change in the level of development in each of these sectors.

The Servernaya-Priladozh'ya includes the Kurkiyokskiy, the Sortaval'skiy, Pitkyarantskiy, the Suoyarvskiy and Olenetskiy Administrative raions. These raions are much closer to Leningrad and the Kareliyan isthmus than are other localities of the Republic, this has great economic-geographic significance. The forest tracts located on the territory in the southwestern part of the Republic are the main source of raw material for the cellulose-paper and wood processing enterprises located here.

The construction of the Zapadno-Karel'skaya railroad initiated the development of the forest tracts adjacent to it; the southern part of the Zapadno-Karel'skaya forest economy raion will make up the deficit in raw material at the wood processing enterprises in the Kareliyan isthmus and to some extent in Leningrad will be supplied with timber via the Severnoye-Priladozh'ye. The Severnoye-Priladozh'ya is characterized by a unilaterial economic structure, the leading role in the economy is played by the cellulose-paper industry and timber processing. In conjunction with this, there has

been considerable development of the logging industry and agriculture in this raion. The largest economic centers are located on the shore of Lake Ladoga. The Prionezh'ye includes Prionezhskiy, Pryazhinskiy, Petrovskiy, Kondopozhskiy, Medvezh'egorskiy, Zaonezhskiy, Pudozshskiy Administrative raions and the city of Petrozavodsk. This territory embraces a large part of the south of the Republic and its historic "nucleus" situated around Lake Onega. Economic specialization and the use of Lake Onega unite the variegated territory. Water transport on this Lake and the immediate influence on all the economic and cultural life of the region by the large Republic centers of Petrozavodsk also serve to unite the region. This region provides electrical energy, timber and mineral raw materials, as well as agricultural produce to Petrozavodsk. There will be a considerable increase in the development of timber resources in the western and eastern sectors of the Prionezh'ye during the sixth five-year plan.

This region is the best-developed sector of the Republic; all branches of its national economy are represented here; a large role is played by the metalworking and machine building industries, wood processing and the cellulose-paper industry; there is considerable development in manufacturing and other economic branches.

In addition, the natural conditions in the separate sectors of this territory, their differing economic-geographic situation in relation to Petrozavodsk, the White Sea-Baltic Canal and neighbouring Oblast's, as well as the plenitude of local industrial centers have produced some variations in different sectors of the Prionezh'ya (in the western, northern and eastern districts).

Central Kareliya combines the Segezhskiy, Belomorskiy and Rugozerskiy administrative raions including the territories immediately adjacent to the railroad line, the southern part of the White Sea area and the Central and northern sectors of the White Sea-Baltic Canal, as well as the interior localities connected to it in a transportation relationship.

The economic unity of this territory is based on transportation connections and on the common tasks in the field of hydro-electric and the timber economies.

Central Kareliya is characterized by complex utilization of timber resources, large scale development of the cellulose-paper industry and an abundance of industrial building materials. This area is growing rapidly and is distinguished for its large scale production of electrical energy and aluminum, as well as development of the fishing industry.

The main economic centers in central Kareliya are Segezha and Belomorsk, these differ among themselves in economic-geographic conditions and economic specialization. Each of these influence the adjacent territories dependent on them. Segezha influences the Vygozero area, while Belomorsk influences the southern White Sea coast.

The Rugozerskiy Administrative raion has varied tendencies in its economic associations in different sectors and in branches of its economy. Thus, timber floated from its northern sectors goes along the Chirka-Kem' river to the city of Kem'; the eastern part of the raion gravitates towards the city of Segezha via the station at Kochkom; the economic ties of the western and southern parts are directed towards the south. At the present timbe, the better developed eastern part of the Administrative raion is of greater economic significance.

The Kareliyan North includes the Kemskiy, Loukhskiy and Kalevala Administrative raions. The economic-geographic position of this group of raions is characterized by its remoteness from the largest industrial centers of the Republic and the comparatively small development of lines of communication. This situation hampers the development of the forest tracts and those deposits of minerals in which the Kareliyan North is particularly rich. The relative proximity of the Murmansk Oblast' to the North of the Republic facilitates the establishment of economic ties between them (particularly in the exploitation of timber wealth and the utilization of the hydro resources).

The extractive branches of economy are best developed in the Kareliyan north, this includes mining. The coastal position of the Loukhskiy and Kemskiy raions has provided the necessary conditions for development of fishing and fish processing industries. Timber processing branches of the economy will be greatly developed during the sixth five-year plan. Thus, the described sectors of the Republic represent a group of adjacent Administrative raions, comparatively closely associated amongst themselves in an economic sense and differing one from the other in the combination of conditions for economic development and in economic specialization.

Further growth of the productive forces of the Republic will lead to even greater economic interlacing of the adjacent Administrative raions, to their more complex development and to an increase in the roles of the leading branches of the economy. This process is connected with the further development of complex timber processing centers based on the raw resources from considerable territories, the construction of large hydroelectric power stations, with the further growth of a network of railroad and auto roads, with population increase and the delineation of more clear-cut economic regions.

NORTHERN PRILADOZH'YE

The basis for unification of the Olonetskiy, Pitkyarantskiy, Suoyarvskiy, Sortaval'skiy and Kurkiyokskiy raions into one group is their economic graviation to Lake Ladoga and the economic centers located on its shores. This gravitation is due to their transport-geographic position and partially to the direction of flow of rivers. Timber cut in the Vidlitsa river basin is floated down to the establishment in the Priladozh'ye. Much of the timber from the Suoyarvskiy raion is also delivered into this area, it is transshipped from the log-driving routes onto the railroad, passes through Suoyarvi to Sortavala and along the branch line from Suoyarvi to Naysten'yarvi or else it goes by auto road directly to the railroad.

The main trunk rail line in the Northern Priladozh'ye is the railroad from Leningrad through Priozersk, Elisenvaara, Sortavala, Yanis'yarvi, Suoyarvi to Petrozavodsk with the branches from Yanis'yarvi to Kharlu, Pitkyaranta and Olenets and from Metkasel'kya to Vyartsilya.

Lake Ladoga unites the regions of the Northern Priladozh'ye via the Neva river with Leningrad and the Baltic Sea ports, as well as through the Svir' river with Lake Onega.

The Priladozh'ye raions are economically united by a network of well-built truck roads which is much thicker than in other sectors of the Karel'skaya ASSR; this facilitates economic development of this group of raions and the formation of their external and internal communications.

The Northern Priladozh'ye has up to 7% of all the timber reserves that are under exploitation, 11% of volume of timber cut, as well as up to 25% of the gross product of the cellulose-paper industry and 28% of the wood-working industries in the Republic.

The forest tracts in this area relate to the Ladozhskiy forest economy raion. It must be noted that the forests of the Northern Priladozh'ye are characterized by the highest ratio of deciduous species in the Republic (12.4%), in particular birch; this provides the raw material for the ski, veneer and furniture industries. Spruce stands in this area are third in the Kareliyan ASSR (50.9%). These spruce stands are the raw materials base for the cellulose-paper industry in the Priladozh'ye.

The main timber driving rivers, the Olonka, Tuloksa, Vidlitsa, Tulemayoki and Uksunyoki, are characterized by their numerous rapids, this makes it necessary to erect special structures for the passage of timber. Besides this, the estuaries of some of the rivers become clogged with sand which causes difficulties in the further driving of arriving timber.

Among the cellulose-paper enterprises in the Priladozh'ye the leading one is the large sulphate-cellulose plant "Pitkaryanta", which produces high quality white cellulose. More than 20 paper factories in the Soviet Union receive cellulose from this plant for the manufacture of parchment, carbon paper, light sensitive, cartographic, insulating, filtering, electrical, lithographic and other types of special paper. Soft wate which does not

contain the insoluble salts of calcium and magnesium is necessary for the production of high grade cellulose. The water from Lake Ladoga in the vicinity of Pitkaryanta meets this requirement.

The cellulose-paper kombinat at Kharlu, the paper factory at Lyaskelya and the cardboard factory at Suoyarvi produce tens of thousands of tons various grades of paper, cellulose, roofing paper (used in the manufacture of roofing) and the so-called tare cardboard from which packages are made for cigarettes and the goods produced by perfumers, confectioners etc.

The woodworking industry is represented by a large furniture-ski factory at Khelyulya, at which practically all the ski-making processes have been mechanized; by a veneer kombinat at Lakhdenpokh'ya and the sawmills at Il'inskiy, Naysten'yarvi and Roykonkoski. The lumber mill at Naysten'yarvi has a prefabricated-housing shop and a small quantity of prefab homes are also made at the Il'inskiy lumber mill. Over and above this, there are a number of small enterprises operating in the Priladozh'ye making wooden boats, furniture and other products for local industry and the cooperatives.

Most of the enterprises in the Northern Priladozh'ye were destroyed during the war. Now, they have not only been rebuilt to their full capacity but, in the process of reconstruction, they were outfitted with more up-to-date equipment.

The main source of electrical energy to the cellulose-paper and other industrial enterprises in the Northern Priladozh'ye is hydroelectric energy. The rivers flowing through this area are not large, and the terrain hampers the construction of large reservoirs for seasonal regulation of water reserves. On the other hand, however, the large number of streams and their relatively great fall favours the utilization of hydroelectric resources. Hydropower stations frequently utilize the energy of the same river in succession. For example, several power stations have been built on the Yanis'yoki river, these are the stations at Khyamyakoski, Kharlu and Lyaskelya. A relatitively small number of industrial electric power stations operate on wood waste.

The proportion of the remaining branches of industry in these raions is considerably lower than that of the industries processing timber. A small metallurgical and metalworking industry is represented by the plant at the settlement of Vyartsilya, which produces alloys, and by the Olonets motor repair plant. Practically all the light and food industries are concentrated in the city of Sortavala.

Mineral resources must acquire great importance in the economic development of the Northern Priladozh'ye. Mining is an ancient industry in this region. The polymetal deposits in the vicinity of Pitkaryanta were worked as early as the 18th century; at that time, copper, tin, silver and iron ore were extracted here. The scope of mining operations was quite large for that period. Nevertheless, mining declined in the second half of the 19th century. The deposits were abandoned at the beginning of the 20th century. Small deposits of iron ore are also known in other localities in the Northern Priladozh'ye. Mention has already been made of the hematite ores in the vicinity of Suoyarva and Tulmozero and of the short-term operation of the small metallurgical plants at Vidlitsa, Tulmozero and Suoyarvi.

The results of postwar prospecting and exploration work have shown that the Northern Priladozh'ye can be of great importance as a supplier of quartz-feldspar raw material for the ceramic industries, both for artistic and everyday chinaware, medicinal and chemical porcelain, electrical insulators and other products. Non-ore minerals are of great importance, particularly pegmatites and building and facing stone materials.

Building and facing stone material (granites, marbles, etc.) from the Priladozh'ye were widely used in the construction of Petersburg. For example, the eight magnificent atlasses at the entrance to the Ermitazh were carved out of Sortavala granite.

Marble from the Priladozh'ye district is as well known as that from the White Sea area. The facings in the Isaakievskiy Cathedral and part of the facing in the Marble Palace in Leningrad are of marble taken from the Ruskeal'-skiy deposit. At the present time, lime is being produced at the Ruskeal'skiy marble-limestone combine for the paper industry enterprises and for construction, while the waste materials are used for chalking of soils. The Ruskeala deposit contains calcite and dolomite limestones and is one of the few such deposits in the Kareliyan ASSR.

There are large reserves of dolomite rocks in the northern Pri-ladozh'ye also, these are suitable as flux for metallurgy, for production of dolomite lime and other purposes. These deposits, in addition to the one at Ruskeala, are known, in particular, to lie around Lake Maloye Yanis'yarvi and on the northern shore of Lake Suoyarvi. The dolomites are accompanied by deposits of quartzite, which is a raw material for Dinas fire brick and acid resistant plant equipment.

The clay deposits located in the Sortavala and Olonets regions are little used at the present time. The Olonets Plain is particularly rich in lacustrine clays. The Olonets deposit is one of the largest in the Republic, it covers an area of more than 100 hectares. The clays here are of very high quality, their clay fractions come to 43%.

The clay in some of these deposits is suitable not only for the manufacture of building bricks, but for sewer and drain pipes, tile, dinnerware, facing plates, etc. However, the deposits are still very little used. It shall be necessary to considerably increase the exploitation of these deposits in the near future because of the growing requirement in the Republic for drainage pipe (particularly in the Olonets Plain). The Khelyul'skoye deposit in the Sortavala raion is of local significance only, it supplies clay to a small brickyard.

The Northern Priladozh'ye plays an important role in the rural economy of the Republic. There are considerable tracts of tilled lands here (50% of the total for the Republic) and a considerable number of cattle (45% of the total for the Republic). This is accounted for by both the natural conditions which are more favourable to farming and animal husbandry, than are other sectors of the Republic, and by the fact that agriculture has been practised here for a long time. Agricultural production is nonethless not uniformly distributed over the territory of the Northern Priladozh'ye.

The terrain on the north bank of Lake Ladoga and its adjacent territory is characterized by a broken relief and outcroppings of primary rocks. The primary rocks disappear under quaternary deposits with distance from Lake Ladoga. However, outcroppings can be seen on the contemporary surface in all districts.

The diversity of the relief is reflected in the patchiness of the soil cover and in the predominance of sandy loam podzolized soils which are frequently mixed with barren, poorly developed, skeletal soils.

In this sector, as in all of Kareliya, peat-podzolized and pate-swampy soils are frequently found in the depressions in the terrain. Alluvial (erosion deposition) soils are infrequently formed in the Northern Priladozh'ye from river deposits.

The Olonets Plain is the most suitable for farming (with the exclusion of the great Obzhanskiy Swamps), it covers approximately 25,000 hectares. The fact that there are practically no stones on the surface is of particular importance. About 70% of the Plain is under cultivation or in haymow, the remainder is covered with swamp and scrub. The soil here is weakly podzolized, clayly and loamy and, as a result of the increased acidity, it requires chalking. There is no other such large tract of suitable farming land in the Northern Priladozh'ye.

In the Sortaval'skiy, Pitkyarantskiy, Suoyarvskiy and Kurkiyokskiy raions, comparatively small sectors are cultivated, these are patchily distributed amongst swamps, forest and barren rocky areas. Swamps take up considerable areas everywhere.

Drainage work on the Olonets Plain was well developed during the prewar period. At the present time the reclamation network is being reconstructed and extended in all regions of the Priladozh'ye.

Climatic conditions in the Priladozh'ye permit the growing of such heat-loving crops as sugar beets and tomatoes. Normally these are planted on the southern slopes, sheltered from the cold winds; however, elevated localities are also used.

The Olonetskiy, Kurkiyokskiy and Sortaval'skiy raions are particularly outstanding for the volume of agricultural production and the population numbers engaged in the rural economy; these raions have a multilateral, but mainly dairying-beef, economy. In association with this, more than 90% of all areas under sown grass in the Republic are in the Northern Priladozh'ye, and nearly 60% of all vetch and grain. However, grain growing plays an important role, particularly on the Olonets Plain.

Agricultural development of the western regions of Northern Priladozh'ye is confined mainly to the organization of sovkhozes. Of the 27 dairying-beef-raising sovkhozes in the Karel'skaya ASSR, 22 are located in the Northern Priladozh'ye. In addition, two fur-farming sovkhozes have been organized here.

The proximity of Leningrad to the Kurkiyokskiy raion (with trains running from Leningrad to Elisenvaara) has facilitated the development of branches of the rural economy which are intended to serve a large city (production of fresh milk, cream, cottage cheese, early vegetables, etc.). Milk is made into butter in the regions farther removed from Leningrad and from the railway lines. Fruit growing and beekeeping is somewhat better developed in the Olonetskiy raion than it is elsewhere.

The rural economy in the Northern Priladozh'ye has a great prospects for development. At the present time, a number of measures are being implemented in the reconstruction and expansion of land reclamation networks and the development of new agricultural lands, in the further consolidation of the fodder base for livestock, the development of potato-vegetable raising and fruit growing.

Lake Ladoga is rich in a variety of fish. Catches are not uniform in different parts of the Lake: in the southern part of the Lake the average fish-catch, according to long-term data, amounts to 10 kgms. per hectare of fishing area, while in the northern part it is 17.5 kgms.

However, this large catch, on both the lake and the rivers draining into it has been greatly reduced in the postwar years. Along the whole length of the Ladoga shore in the Karel'skaya ASSR, only 2 fishing kolkhozes and the Sortavalskiy Fish combine engage in the fishing industry.

The decline in the fishing industry is the result of both the lack in labor force, and in the long-term pollution of the water by wastes from the cellulose-paper industry and refuse from timber flotation. A serious matter also is the fact that at the majority of the hydro power stations and timber floating constructions there is a lack of fish passes along which fish spawning on the headwaters of rivers would be able to by-pass these points on their way to the spawning grounds.

The closing of trawler fishing on Lake Ladoga should do much to replenish the reserves of fish.

Two fish hatcheries have been organized for the purpose of increasing the fish reserves: the one at Salmi on the Tulemayoki river is working on increasing the reserves of salmon and lake trout; the one at Suystamo at the southeastern tip of Lake Yanis'yarvi is working on the problem of introducing Lake Onega whitefish.

Sortavala (earlier Serdobol') is the largest industrial and cultural center in the northern Priladozh'ye. The varied nature of industry in the city is represented by the medium and small enterprises for light and food industries. There are sewing and felt goods factories; a fish combine; a bakery; small boat repair, furniture and brewing shops; a mill and a dairy products plant in the city. There is a large furniture factory and a ski shop not far from the city in the settlement of Khelyulya.

Sortavala is an important cultural center in the Republic; there are two technical schools here, a Russian drama theater, several clubs and schools. The large, book printing establishment in Sortavala is of Republic-wide importance.

Sortavala is one of the most picturesque cities in the Soviet Union. The milk climate, clarity of the atmosphere, beauty and individuality of the surroundings has been attracting vacationers for a long time. At the present time there are several rest homes and sanatoriums in the city for people suffering from heart and nervous disorders.

The second city in size and importance is Olonets. It is located at the confluence of the Olonka and Megrega rivers and 18 km. from Lake Ladoga. In the 17th century, Olonets was a fortress on the northwestern limits of the Russian State. Olonets is important in that it is the center of the largest agricultural region in the Karel'skaya which serves the needs of the MTS and the kolkhozes in the Priladozh'ye.

The economic development of Olonets was hampered in the past by its displacement from a railroad trunk line. At the present time Olonets is joined by railroad with the central part of the Republic and the Leningrad Oblast'.

THE PRIONEZH'YE

The Prionezh'ye takes up about 1/4 of all the Republic area; about 3/5 of the population live here and 2/3 of the urban population is concentrated here. The Republic's capital and largest economic and political-cultural center of Petrozavodsk is located within the borders of this territory.

This territory takes in seven administrative raions surrounding Lake Onega. Five of the raions (Prionezhskiy, Kondopozhskiy, Medvezh'egorskiy, Zaonezhskiy, and the Pudozhskiy) have direct exits onto the lake and two of the raions (Pryazhinskiy and Petrovskiy) come very close to the lake from the North. The two last-named raions are located in the basins of rivers flowing into Lake Onega: the Pryazhinskiy administrative raion is located in the basin of the river Shuya, while the Petrovskiy raion is in the basin of the Suna river. The forest tracts situated in these basins gravitate towards centers located on Lake Onega (excluding the Vedlozerskiy lespromkhoz which gravitates towards Lake Ladoga).

More than 4/5 of the Lake Onega basin lies within the Kareliyan Republic, only the southern shore of the Lake lies in the Vologodskaya and Leningrad Oblast's.

Lake Onega had an influence on all stages of development in Kareliya. The Lake has attracted settlers since ancient times; settlements have grown up on its shores, and occassionally, these have become industrial centers. In the 16th and 17th centuries the best developed sector of southern Kareliya was the northern Prionezh'ye and later, the economic center moved to the western shore where the largest city in Kareliya grew up, i.e., the city of Petrozavodsk.

Lake Onega united the territory under question with the Mariinskaya system and provided an exit to the Gulf of Finland overland; water routes connecting the Prionezh'ye with the capital and with the north shore of Lake Ladoga facilitated this area's economic development. The laying of the railroad fundamentally improved the economic-geographic situation, bringing the area nearer to Petersburg in a transportation sense.

At the present time, the transportation access of the Prionezh'ye is the Kirovsk railroad, which cuts the Prionezhskiy, Kondopozhskiy and Medvezh'egorskiy raions. Other administrative raions are connected by auto-truck road and with the railroad trunk line to some extent. Connections with the Kirovsk railroad are weakest in the Pudozhskiy raion, as well as the Petrovskiy and Zaonezhskiy raions.

The Pudozhskiy raion has very poor connections with its immediate neighbours at the present timbe (Medvezh'egorski and Zaonezhskiy raions), it centers more on Petrozavodsk, with which it has water communications during the navigation period and air communication the year round.

On the whole, the Prionezh'ye is provided with adequate railroad communications with Leningrad, Moscow and Murmansk, and the railroad line Tomitsa-Suoyarvi joins it with the northern Priladozh'ye and the ports of the Kareliyan isthmus. Petrozavodsk is connected with Leningrad by a well-built highway. Truck roads join the Prionezh'ye to other sectors of the Republic. The Prionezh'ye has a water exit on the White Sea via Lake Onega and the White Sea-Baltic Canal.

The importance of Lake Onega lies also in the fact that the rivers flowing into it are routes for flotation of timber, this facilitated the development of timber processing at points situated on the Lake.

In order to give a characterization of the economic-geographic position of the Prionezh'ye it is necessary to also note its proximity to the northern Priladozh'ye, which has the main agricultural base of the Republic within its borders.

The formation of the economic unity of the Prionezh'ye is facilitated by the influence on the whole territory by the great economic hub of the Republic, Petrozavodsk, the Presence of a relatively well-developed network of communication lines as well as utilization of Lake Onega. Besides this, the presence of large electric power stations is also important.

National economy specialties in the Prionezh'ye are characterized by the following features. This territory is the only part of Karel'skaya ASSR in the economy of which machine-building and metalworking play an important role, these serve the main branches of the economy throughout the Republic: Production and repair of equipment for the logging and fishing industries, boat-building and ship repair, production of equipment for specialized types of transport. The evolving machine-building industry is utilizing the experience at the old machine-building plant in Kareliya and the favourable transport-geographic conditions.

Mechanization plays an important role in the woodworking industry. This is associated with the favourable transport-geographic position of the territory for export of saw timber and prefabricated houses to other regions of the Soviet Union and the demand of industry, construction and urban economy of the Prionezh'ye itself. The Prionezh'ye is outstanding also in the cellulose-paper industry; the second largest cellulose-paper combine in the Republic is located at Kondopoga. The forest tracts in the western Lake Onega region provide the raw materials base for this combine and for the woodworking industries in the western and northern Prionezh'ye.

This territory is a pioneer in the construction of large electric power stations in the Republic. The large Kondopoga-Petrozavodsk electric power system lies within the confines of this region. The capacity of individual electric power stations in the Prionezh'ye is considerably greater than of those in the northern Priladozh'ye, but it is very much less than of those in the central part of Kareliya where much larger plants have been built, are being built, and are planned. Together with the Kondopoga hydroelectric power station, of great importance in the Prionezh'ye is the Kondopoga paper combine thermal electric power station and the Solomenskaya thermal power station in Petrozavodsk, which makes some use of waste materials from wood processing as fuel.

Production of consumer goods plays an important role in Prionezh'ye industry, this is associated with both the concentration here of a considerable part of the population and with services to the population of other parts of Kareliya.

In the agricultural sense the Prionezh'ye is a region of urban rural economy, dairy-meat livestock husbandry and grain growing. More than 2/5 of all the cattle in the Republic are in this territory. The Prionezh'ye serves as a supplier of timber to Leningrad, to where (via the wharf at Voznesen'ye) a large part of the timber cut in the Pudozhskiy raion is shipped. Timber from the Prionezhskiy (Zheleznodorozhno-Svirskiy forest economy raion) and other leskhozes also goes outside the Republic.

The head sector of the White Sea-Baltic Canal is situated in the northern part of the Prionezh'ye. In connection with this, transportation functions play a very important role in the Prionezh'ye economy, while its main economic ties have a dual character: To the south and towards the White Sea.

Separate parts of the Prionezh'ye differ somewhat in natural conditions and have some peculiarities in the composition of the branches of the economy; the economic development of different parts of the territory is influenced by the local industrial centers (Kondopoga, Medvezh'egorsk, Pudozh). As has been stated above, it is necessary to differentiate between the western, northern and eastern parts of the Prionezh'ye.

The western Prionezh'ye has a largely elevated relief. All its northwestern part is taken up by the western-Kareliyan highland. Its western part lies on the Ursk moraine and on the Olonets highland (with heights of up to 200 meters). The Shokshinskaya stratum extends along the southwestern shore of Lake Onega. Between the Olonets highland and the southern edge of the western Kareliyan highland lies the Syamozerskaya depression, within the confines of which is the Shuyskaya lowland (on the central and lower currents of the Shuya river and at Lake Logmozero). This lowland joins up with the Ladvinskaya Plain in the southeast, or, in other words, with the Ivinskaya river lowland.

Practically all the territory of the western Prionezh'ye is characterized by considerable dissection, numerous outcroppings of bare rocks on the surface, great stoniness of the soil and extreme bogginess of the lowlands.

The Shuyskaya and Ladvinskaya lowlands are more favourable for farming, these have ancient lake bottom and varve clays, boulder loams and boulderless loams. The soils here are of varying degrees of podzolization, this includes the sandy soils as well as the loams and the clayey soils.

The western Prionezh'ye territory, more favourable in character of relief and soil condition for farming, is characterized by extreme swampiness, as for example, in the Shuya river valley. Drainage measures will make it possible to develop considerable areas of stone-free land. A number of swamps in the Pryazhinskiy and Prionezhskiy have been studied, these are of particular value for agricultural development: On the Korzinskaya Plain, the L'ezhesuo swamps covering an area of about 27 hundred hectares has been studied, the Padas swamp in the eastern part of the Shuyskaya Plain with an area of about 1,277 hectares and such smaller swamps as the one at Kindasovo, Matrosy and others. The peat-bog soils in the Ladvinskaya Plain combine extraordinarily well with the mineral, tilled soils and could provide farming with peat as an organic fertilizer and for bedding. In addition, following exhaustion, they could be used as a soil reserve for provision of fodder.

At the present time agricultural development of the western Prionezh'ye is not great and the cultivated tracts of land are mainly situated along the shores of the larger lakes.

In a climatic sense the western Prionezh'ye belongs to the southern part of Kareliya and lies between the yearly isotherms of 2.5 and 1.5 degrees. In length of vegetation period this territory differs little from the northern Priladozh'ye, and its most important agricultural areas are located in the southern part. As in the northern Priladozh'ye, the climatic conditions here do not present any obstacle to the raising of the main grain and market garden crops.

The northern Priladozh'ye has a gullied relief over most of its territory; in the northeastern sector there is a hilly-moraine and rocky terrain, while on the Lake Onega shore, terraces have developed.

There are ancient lake terraces in the northern Prionezh'ye which are suitable for agricultural development. The northern Prionezh'ye is well-supplied with meadow lands; as has already been stated, in the Zaonezhskiy Administrative raion alone, for example, about 15% of all meadows in the Republic are concentrated. Fertile, dark-colored, non-podzolized loam soils, called "Olonets-chernozems" are found in the eastern part of the Zaonezhskiy Peninsula. Soddy-podzolized soils are also found here.

Fairly large plots of plowed land in the Zaonezh'ye are located both on the Peninsula and on the islands, which have a small population. Some of the islands have "soft soil" and are almost entirely cultivated; combines are used here also. On some of the other islands the large number of boulders hampers utilization of areas for planting and complicates the use of wheeled transport. Livestock raising conditions are favorable, since most of the islands have good pastures, while raising of cattle does not require continual herding.

The eastern Prionezh'ye has considerable areas of tillable lands in the valleys adjacent to rivers and lakes, particularly in the southern part of the Pudozhskiy Administrative raion, which is characterized by a predominance of slightly rolling level relief.

The soil and climatic conditions of the Pudozhskiy raion favour the development of not only grain crops and vegetables but, also, growing the flax for which the region was so famous in the past that the coat-of-arms of the city of Pudozh included a sheaf of flax. Considerable areas here can be used as both meadow and pastures. The areas of haymow in the Pudozhskiy raion is nearly double that of the area of cultivated land, which is one of the pre-requisites for development of animal husbandry.

Wide possibilities for further economic development in the Prionezh'ye are provided by its forests wealth, a network of log-driving routes, energy resources on the river network, minerals and fish resources.

The timber resources in the western Prionezh'ye are part of the territory belonging to the Petrozavodsk, Prionezhskiy, Pryazhinskiy, Petrovskiy, Porosozerskiy and Kondopozhskiy leskhozes. The forested area takes up about 60% of the territory while the reserves of timber are about 1/6 of all the timber reserves being exploited in the Republic. About 2/5 of all timber reserves in the western Prionezh'ye are part of the Petrovskiy leskhozes.

(Footnote: Most of the forests in western Prionezh'ye make up the Zapadno-Onezhskiy and Zheleznodorozhno-Svirskiy forest economy raions. Forests in the north-western part of the Petrovskiy administrative raion enter into the western Kareliyan forest economy raions.).

The western Prionezh'ye is the leading logging operations in the Republic are concentrated here. This territory's forest tracts are the raw materials base for the woodworking industry situated within its confines, i.e., the Kondopoga cellulose-paper combine and the industries using mechanized methods of woodworking (lumber sawing, prefabricated housing and furniture industries).

Spruce stands make up most of the forests in the western Prionezh'ye as well as in all of southern Kareliya, (more than $\frac{1}{2}$, and in the southern part up to $\frac{3}{4}$ of all timber reserves). The mature stands of timber are characterized by a rather low portion of ready and aged growth.

Timber stands in the Kondopozhskiy, Petrozavodskiy and Prionezhskiy leskhozes are most intensively exploited. Taking one hectare of forest covered area in the Prionezh'ye as having a distribution of 1.5 cubic meters of timber, in the above-mentioned leskhozes the yield amounts to about 2.5 cubic meters per hectare (at the Petrozavodsk leskhoz it was up to 3 cubic meters). Due to its remoteness from trunk transportation lines, the Petrovskiy leskhoz was utilized very little (o.35 cubic meters per hectare of timber stand).

On the whole, logging in western Prionezh'ye considerably exceeds the computed level. This excess is particularly great in the southern part, adjacent to the Leningrad Oblast'. Thus, in the Zheleznodorozhno-Svirskiy forest economy raion, timber cutting reached 246% of the planned cutting in 1956. Logging in the Petrovskiy raion in the area of the western Kareliyan railroad will be tripled during the sixth five-year plan. (There are four lespromzhkhozes operating in that raion at the present time.) Simultaneously the wood processing industry is being organized in the raion (prefabricated housing).

The expansion of logging operations will facilitiate the development of a network of log-driving rivers, the utilization of Lake Onega and other lakes for timber flotation as well as the construction of log hauling, narrow-gauge railroads. There is about 350 hectares of forested area for each kilometer of driving river route here (throughout the Republic it is about 600). The largest rivers which are of timber floating and energy importance are the Suna and Shuya. The Suna has a great number of rapids and has the greatest rate of fall of all rivers in the Republic (0.72 meters per km.). On the Suna river, within 27 km. of its estuary, stands the wonderful waterfall Kivach, immortalized by J.R. Derzhavin in his ode "Vodopad" (that means "waterfall"). Here the water falls in cascades down a total height of 11 meters.

The importance of the river Suna as both a timber flotation route and a great source of energy has already been mentioned. The water level was raised from 94.5 to 102 meters on the Suna river by means of construction of a dyke above the Girvas Falls and a dam at the Falls itself. Water from the Suna river flows along a natural bed, which has been partially deepened in places to an artificial canal, into Lake Pal'ezero, and from it into the Nivka river, farther on the river water flows into Lake Sandal and from it into Nigozero and Kondopoga Bay. The Kondopoga hydroelectric power station utilizes the drop between Nigozero and Lake Onega.

During the fifth five-year plan, the Pal'ezero and Sandal water reservoirs and the Pal'ezero hydroelectric power station were built. During the sixth five-year plan, it is planned to build the Pal'esandal'skaya hydroelectric power station, the Valazminskaya hydroelectric power station and a reservoir. This will also complete the energetics utilization of the Lower Suna and will provide long-term regulation of the Suna river cascaae of hydroelectric power stations.

The Shuya river is an important log-driving river, it also possesses considerable energy resources and permits regulation by means of contruction of reservoirs on Syamozero and Shotozero.

Other important flotation rivers in the western Prianozh'ye are the Lizhma and Unlitsa rivers. Traps have been built at the estuaries of the main flotation rivers; here, sorting, rafting, removal and loading of timber is carried out. Large scale timber floating is carried on over Lake Onega to Petrozavodsk and Kondopoga. Narrow-gauge timber hauling railroads have timber tracts in the western Prionezh'ye (the Pyazhievo-Sel'gskaya, Payskaya, Derevyanskaya, Shuysko-Vidanskaya and others).

The northern Prionezh'ye timber resources (Medvezh'egorskiy and the Onezhskiy leskhozes) are great and are comparatively intensively exploited.

(Footnote: These forests are part of the Zapadno-Onezhskiy forest economy raion. The forests of the former Segozerskiy Administrative raion (added to the Medvezh'egorskiy raion) are part of the Segezhskiy forest economy raion).

Volume of timber out approximates that of the Pudozhskiy leskhoze, which has one of the riches reserves of timber. Development of logging operations is also facilitiated here by the plenitude of flotation rivers (the Kumsa, Pyal'ma and others), the proximity of forest stands to Lake Onega and log-hauling roads (the Pyalemskaya narrow-gauge railroad and a number of truck roads). Logging operations in the northern Prionezh'ye ought to provide part of the requirement for timber of the Kondopoga cellulose combine and to Petrozavodsk. The hydrographic network of the former Segozerskiy Administrative raion is part of the Vyg river basin (Lakes Seletskoye, Maslozero, Segozero, the river Seletskaya and others). Flotation along the Vyg river goes towards Vygozero.

In the eastern Prionezh'ye (Pudozhskiy Administrative raion), nearly 80% of the territory is covered with forest, of which more than 4/5 of all the forested area is under mature and overaged timber stands, this ensures a great scale of logging. The most productive forest tracts in the Republic are situated here, the preponderant species is spruce, in second place is pine.

During the prewar years logging operations grew continually in scope and reached 1.5% of the ready reserves. However, in 1940, logging amounted to only 50% of the computed cutting. During the war the scope of logging operations decreased. In recent years the level of logging operations has increased somewhat and in 1954 it amounted to about 40% of the computed cutting.

Exploitation of forest and natural resources in the Pudozhskiy raion is being delayed mainly by the lack of a network of paved roads and by an insufficient labor force.

The nearest railroad trunk line is more than 200 kilometers from the raion, while the density of paved roads in this raion is approximately half that in the regions situated on the western shore of Lake Onega. Thus, in the Kondopoga area, where the truck road network is also not great, there is 15 kilometers of road per 100 sq. km. of territory, while in the Pudozhskiy raion there is only 7 kilometers.

The task of developing the forest in this raion is extraordinarily complicated at the present timbe by the fact that due to the remoteness from railroads, all mechanisms, equipment, tools, supplies, fodder and workers can be brought in here mainly only during the navigation period. Widespread development of the Pudozhskiy forests is planned for the sixth five-year plan; logging will increase here by 3 to 4 times.

Timber is floated down the rivers flowing into Lake Onega as well as along their tributaries. There is a log trap at the estuary of the main flotation artery, the river Vodla, where sorting, rafting and dispatch of timber is carried out. In the eastern Prionezh'ye, spruce pulpwood is cut at the present time to supply the needs of the paper enterprises in the Baltic area.

The Pudozhskiy raion has very good reserves of hydro energy, of which the lakes from which most of the rivers flow could serve as excellent flow regulators.

Utilization of mineral resources has a large role to play in the economy of the Prionezh'ye.

There are large deposits of gabbro-diabase and volcanic tuff in the western Prionezh'ye, as well as sandstone, quartzite-sandstone, slates, dolomite marbles and brick clay. Diabases occur south of Petrozavodsk to the boundary with the Leningrad Oblast'. The largest diabase deposits are the Roprucheyskoye, Drugoretskoye and the Gimoretskoye. Here also, near Lake Onega, are deposits of sandstones (Kamennyy Bor at Petrozavodsk itself, at the settlement of Shoksha, Pukta, Brusno, on the island at Sheltozero and others). The proximity of these deposits to a water route has facilitated their utilization.

Brick varve clays occur near Petrozavodsk (Sulazhgorskoye deposit in the Tomitsa river valley and the Solomenskoye deposit), as well as along the lower current of the Suna river. Large deposits of glacial moraine clays occur near the settlement of Sheltozero (the Sheltozerskoye deposits) and on the territory of Petrozavodsk (Golikovskoye deposit). These deposits have been worked for a long time. The largest enterprises are the Ropruchey-skiy diabase quarries, which provide paving stone and quarrystone (fill). The Shokshinskiy quartzite-sandstones are used for making paving stones and curb stones, as facing material and for other purposes.

Kamenny Bor sandstones are used for road quarried stone and as crushed rock. Considerable reserves of metamorphosed crystallized dolomites (Olonetskiy marbles) are concentrated in the region of Lake Sandal and Lizhmozero. The Belogorsko-Tivdiuskoye deposit is worthy of note. Large deposits of black shungite slates (decorative stone) are known in the vicinity of the city of Kondopoga (on Lake Nigozero).

Peat bogs occur in the vicinity of Kondopoga and Petrozavodsk. According to survey data, the reserves of raw peat in the vicinity of these cities amounts to about 800 million cubic meters, or about 100 million tons of air-dried peat. The development and utilization of peat reserves is one of the most important national economy tasks in the western Prionezh'ye, which is one of the greatest consumers of firewood in the Republic. The utilization of peat, as well as further development of hydroelectric resources ought to consolidate the fuel-energy base in the Prionezh'ye.

Of the mineral riches of the northern Prionezh'ye, those of outstanding importance are the crystalline dolomites (the Perguba, Lumbusha, Kuzaranda deposits), the granites (Vozhmozerskoye), shungite slates (Shun'ga) and the limestones (Yuzhnyy Oleniy island). Calcareous tufa mines are located in the extreme south of the Medvezh'egorskiy raion. A deposit of talco-chloride is located in the vicinity of Segozero (at the settlement of List'e-Guba). This talco-chloride stone, following processing at dressing plants, can be used to make industrial talc. Besides the deposits at List'e-Guba, large deposits of talco-chloride are known to exist at Karel'skaya Masel'ga. In the northern part of the Lake Seletskiy, great deposits of quartzite slates have been found which can be used as raw material for production of grinding stones and abrasives.

There are millions of cubic meters of granite in the Eastern Prionezh'ye (at the mouth of the Vodla river, on the Goltsa islands, Nemetskaya Gora, Teterina Gora, Kashina Gora, North shore of Orovguba), these deposits, particularly those at Kashina, possess very high industrial properties. Eastern Prionezh'ye stone is used in the manufacture of paving stone, as facing material and in the erection of monuments.

Due to the abundance of granite reserves in the Kareliyan isthumus, quarrying at Kashina Gora has been restricted considerably at the present time. However, with the reconstruction of the Volga-Baltic canal it will be possible to deliver granite by cheap water route to the Volga region and the central parts of the RSFSR.

The Pudozhskiy raion has, besides granite, deposits of quartzite sands, lacustrine iron ore (Vodlozero), limestones (Kolodozero) and clay.

As has been stated above, Lake Onega is an important lake fishing region. The western Prionezh'ye is an important fishing raion, the Prionezhskiy motor-fishing-boat station is located here and the Petrozavodsk rybokombinat is situated within the limits of the capital.

The main fish caught are smelt, salmon, cisco and whitefish. Cisco occupies first place among the fish reserves and catches taken from Lake Onega. Cisco fishing is carried on chiefly in the Petrosavodskaya Guba and in the vicinity of the Ivanovskiy islands (mainly from the end of July through to the beginning of September). During July and August, cisco is also caught in the vicinity of the settlement of Sheltozero. This raion, however, lags behind other fishing grounds since the cisco do not spawn here but only concentrate for feeding and they are caught during the summer. According to estimates made by V.V. Pekrovskiy (99), the possible catch of cisco along the west side of Lake Onega can be raised to 3,000 centners, or, up to 20% of the total catch taken from that lake.

Cisco are also caught in the Syamozero, Pyalozero and other lakes of the Western Prionezh'ye. Artificial fish hatching is carried on at some of the lakes for the purpose of increasing the reserves of cisco. This work has produced exceptionally good results in lakes Sandal and Ukshozero. In the latter lake, Ladoga cisco ("ripus") roe were released and this fish has now become acclimatized there.

Petrozavodsk Bay and the lake Logmozero are characterized by a predominance of smelt in the catch. Smelt is caught mainly during the spring spawning run.

Suna whitefish is common on the west side of Lake Onega (the fish is large, up to 50 and 60 cm. in length and weighting up to 800 grams). Whitefish are caught almost exclusively at the mouths of the Suna and Shuya rivers during the spawning period, from the end of October to freeze-up. The Chelmuzhskaya Guba of Lake Onega and the estuary of the Shuya river are noted for pike-perch fishing.

The Zaonezhskiy Zaliv is the most important fishing region. According to data for the year 1948 to 1950, the Northern Prionezh'ye produced 85 to 90% of all cisco caught in Lake Onega. Most of this catch was taken from the Tolvuyskoye Onego and only a small part of it came from the Pyalemskoye Onego. The cisco catch in the waters of the Northern Prionezh'ye can be significantly increased by development of fishing at localities of massive congregation of spawning cisco in the Povenetskiy Zaliv, Cherga Zaliv and the Unitskaya Guba. This region is also noted for whitefish (Tolvuyskoye, Pyalemskoye and Maloye Onego) and for pike-perch fishing (mouth of the Pyal'ma river).

There are a considerable number of fishing kolkhozes in the Northern Prionezh'ye, particularly along the shore of the Zaonezhskiy Zaliv. Fishing has long been the main occupation of the local population in the Eastern Prionezh'ye. Fish caught along the Onega lakeshore are slamon, whitefish, cisco, perch, bream, burbot, pike and smelt; the latter makes up 50% of the catch by weight.

The Vodlozero waterbody is rich in bream, perch, pike and burbot, as are other lakes. The Vodlozero is one of the main fishing areas, while in Lake Onega the main localities are at the mouth of the Vodla river, at the settlement of Besov Nos and at Mys Murmanskiy.

Fish is processed at the fish-packing plant located at Kuganavoloka. There is a branch of the Petrozavodsk rybokombinat at the settlement of Shal'skiv.

Thus, the economic development of the Prionezh'ye is based on the utilization of its forest, fish, mineral and water resources. The composition of industry in the Prionezh'ye includes a considerable number of enterprises providing services to the main branches of industry as well as the main branches themselves and transport. The western part of this area is the most industrialized.

Western Prionezh'ye industry utilizes not only local raw materials for processing, but those from other parts of the republic as well (mica, pegmatite etc.). Many of the industrial enterprises in the Western Prionezh'ye are concentrated in Petrosavodsk. Other industrial centers grew up here during the years of Soviet rule, of which Kondopoga is the most important. The lespromkhozes are large, mechanized and electrified establishments. The central woodland settlements of the lespromkhozes (Pay, Pyazhieva Sel'ga, Chalna, Matrosy and others) are expanded, important settled points with schools, hospitals, nurseries, shopping centers, clubs etc. They are supplied with electricity and radio communications.

As has already been stated, agriculture in the Western Prionezh'ye has been best developed on the Ladvinskaya Plain, where a suburban sovkhoz and subsidiary enterprises have been established. The kolkhozes in the Western Prionezh'ye combine grain-growing, vegetable raising, dairy-beef, animal husbandry with industrial occupations (boat building, net-making etc.). Most of the republic's machine-tractor stations are concentrated here. Up to 13% of the cropped area on the Western Prionezh'ye kolkhozes is in vegetables and potatoes. The Prionezhskiy administrative raion is outstanding for its development of market-gardening. Animal husbandry has been developed in the Pryazhinskiy raion, this has been facitated by the abundance of improved hay meadows and pastures.

The Zaytsev sovkhoz, situated within the limits of the Petrozavodskiy raion, is a large supplier of vegetables, potatoes, meat and pork to the city of Petrosavodsk. This sovkhoz has more than 1,000 hectares of farming land. The main branches of its economy are dairying and market-gardening. Hog and poultry raising are also being developed successfully. The Zaytsev sovkhoz was represented at the All-Russia Agricultural Fair in 1954 and 1955.

A fruit and berry nursery, set up on the outskirs of Petrozavodsk, at the community of Sulazhgora, is assisting in the development of horticulture in the Prionezh'ye. The Republic's poultry hatchery and fowl finishing section are located in Petrozavodsk. However, the suburban branches of the rural economy are still not fully developed. Gardening specializes in cabbage-growing and does not fully meet the requirements of the urban population.

The deficiency in development of animal husbandry in the Western Prionezhe'ye is associated with the poor state of natural meadows and pastures, with the poor yields of fodder crops. The Prionezh'skaya Land-reclamation Station is working on the improvement of fodder crop lands.

Northern Prionezh'ye industry has arisen mainly for the purpose of providing such navigation and railroad services as repair shops, wooden boat-building etc. A number of enterprises (a mechanized bakery, a non-alcoholic beverage plant, a brick-yard, personal services establishments, creameries) meet local needs and ship some of their products out of the district. Some of the ancient crafts have been preserved in the Zaonezh'ye; these include the local style in embroidery and the manufacture of items from Kareliyan birch.

The Northern Prionezh'ye is characterized by the great importance of transportation lines in its economy. Auto roads run out from Medvezh'egorsk; regular auto-bus lines have been established along these roads to the Eastern Prionezh'ye (to Rimskiy), with the western part of Kareliya and with other centers.

The industrial future of the Northern Prionezh'ye is connected with the automation of timber processing and the reprocessing of local agricultural products (milk and vegetables).

Dairying and market-gardening are relatively well developed in the Northern Prionezh'ye, particularly in the ancient farming area of the Zaonezh'ye. Market-gardening is developed in a number of places in the Northern Prionezh'ye where such crops as onions, cucumbers, cabbage, turnips, table beets etc. are grown. As has been stated above, horticulture is poorly developed in Kareliya (with the exception of the Olonetskiy raion). But there are apple trees at some of the villages in the kolkhozes of the Zaonezh'ye.

The rural economy in the Northern Prionezh'ye combines with fishing and trades (boat-building etc.). The sovkhoz "Vichka" is a large agricultural enterprise in this area, it is situated near Medvezh'egorsk. This sovkhoz engages in the propagation and finishing of hogs and in market-gardening (potatoes, cabbages and beets are planted in the fields, tomatoes and cucumbers are planted in greenhouses). Dairying and field crops are of secondary importance (oats, grasses).

Fur farming is an important branch of the economy in the Northern Prionezh'ye, it is centered at the large Povenets fur sovkhoz. This fur sovkhoz was represented at the All-Russia Agricultural Fair in 1954 and 1955. Mink has been the chief animal raised at this sovkhoz but lately breeding of blue foxes has been undertaken. A high mink birth-rate has been achieved at this sovkhoz (more than five kits per litter). The fur sovkhoz has a considerable herd of dairy cattle and fields of grain, vegetables and potatoes. Grains are sprouted in the greenhouses during the winter time (greens), these are used in the feed ration.

Most of the populated points in the Northern Prionezh'ye are of low density. The larger communities are situated along the Zaonezhskiy Zaliv and in the Povenets area. The majority of the settlements were founded during ancient times and vestiges of old Russian archietecture have been preserved at some of them.

The Eastern Prionezh'ye is less developed in an agricultural sense and specializes mainly in logging operations. Most of the timber cut is shipped in the raw state, the wood-processing industry is represented only by the saw-mill at Shal'skiy. During the sixth five-year plan, it is planned to raise the volume of logging done in the Pudozhskiy forest economy raion to 1.6 - 1.8 million cubic meters as compared with 0.75 million cubic meters in 1956. For the achievement of this goal, the construction of mechanized logging enterprises already begun will be completed and eight new ones will be built. The Novo-Pudozhskiy sawing-wood-working combine will be built for the purpose of processing timber, while central repair facilities will be built at Pudozh for servicing the logging enterprises.

Other branches of industry in the Eastern Prionezh'ye are represented by granite quarrying, fishing and fish processing, as well as some small food industries and others catering to local needs.

Farming plays an important role in the economy of the Eastern Prionezh'ye. Most of the kolkhozes are situated in the valleys on the lower currents of the Vodla and Chernaya rivers, as well as in the north-west (near Lake Kupetskiy) and in the south-east of the raion, in the Koloda river basin. The kolkhozes lead a multilaterial existence. Dairy-meat sovkhozes are situated in the Eastern Prionezh'ye.

The Pudozhskiy raion has considerable possibilities for increasing the size of its cultivated areas at the expense of part of the hay-mows and more so by draining the currently boggy areas.

The forests, still only slightly spoiled by logging, contain many wild animals, and the Pudozhskiy raion is one of the leading providers of furs in Kareliya. The Ragnozerskoye muskrat industry was organized in the raion during 1932 and 1933. At the present time, more than 60 lakes have muskrat populations. In 1956, a fur farm will be organized at one of the animal husbandry sovkhozes.

Thus, the Pudozhskiy administrative raion possesses remarkable and varied natural resourses. It is posskble to considerably increase the scope of logging operations and the quarrying of structural stone as well as increasing the volume of agricultural output. Further development of the economy is first of all closely connected with the necessity for development of truck roads and railroads. In the furture, following the laying of the Masel'gskaya-Pudozh-Cherepovets railroad and the opening-up of the titanium-magnetite deposit at Pudozhgors, communications between the Pudozhskiy raion and the Northern Prionezh'ye will have been improved.

The main economic centers in the Prionezh'ye are the cities of Petrozavodsk, Kondopoga, Medvezh'egorsk and Pudozh.

Petrozavodsk is situated on the western shore of Lake Onega and fronts on it over a wide area. (61 degrees 47 min. north latitude and 34 degrees 21 min. east longtitude). The city stretches for more than 15 km. along the Petrozavodskaya Guba and has a width of 2-3 km. In the north the Petrozavodskaya Guba joins the Logmozero through the Solomenskiy strait. The depth

of the bay is considerable (maximum depth at average water level is 35 meters). The bay is free of ice for about 210 days of the year. The ice lasts from mid-December through to the middle of May. The bay is shielded from the north winds and open only those from the south-east, which raise great waves on it.

The relief in the city area is typically moraine-rocky and dissected. Hills with overhanging cliffs create quite complex conditions for urban construction. There are five shore terraces within the town limits rising in steps from 34 to 83 meters (Lake Onega is 32.5 meters above sea level). Two rivers flow through the city, the Lososinka and the Neglinka, both fall into the lake.

Petrozavodsk takes its beginnings from the Petrovskiy settlement, founded by Peter I, at the end of August (Beginning of September on the new style) 1703. This locality, which even then was situated in a region of peasant ironmongers, near known deposits of iron ore, was selected for the site of a metallurgical plant. The plant's location on Lake Onega ensured good transportation ties, while the great falls on the estuary part of the Lososinka river favoured the provision of mechanical energy to the plant.

The Petrovskiy settelent evolved rapidly, it was settled by registered serfs, craftsmen brought here from the old industrial centers of Russia (Tula, Kashira, etc.) and by soldiers. Concurrently with the construction of the plant, a fortress with six batteries was built. The fortress stood on the site of the present-day Kirov square. During the period of full operation of the Petrovskiy plant, the population of the community numbered 3,500 persons. After the plant was closed, the population declined, but the community preserved its importance as an administrative center; the Olonets military headquarters was located here along with the Olonetskiy Petrovskiy Plants' Offices.

In 1777, following the erection of the Alexanderovskiy plant, the Petroskiy settlement was renamed the city of Petrozavodsk, which again became the administrative center of the re-defined Olonets District.

Prior to the October revolution, the city was the administrative and largest industrial center of an extended, but neglected and sparsely populated, slowly evolving land. Hot in summer and muddy in the fall, the city was built-up of unsightly wooden dwellings among which a few stone structures stood out, these were the "business places", the Capitol and the trading stalls.

With the establishment of Soviet rule, in conjunction with the general development of the economy and the culture of the republic, its capital, Petrozavodsk began to grow and expand. Its economic and cultural roles in the contemporary aspect of things underwent pronounced change. The city was converted into the greatest industrial center in Kareliya by the reconstruction of the Onega plant, oldest in the country, and the building of new enterprises (ski, mica, etc.). In conjunction with this, its connections with the national economy of all the republic increased steadily.

Railroads pass through the city towards the south, north, and west. The waterways are being utilized with increased frequency for communication between the capital and the republic. *

A considerable amount of the bulk raw materials needed by the city's industries is brought in by water (deal timber, raw minerals etc.). A considerable amount of firewood is also delivered to the city by water route.

The industrial character of the development of Soviet Petrozavodsk can be seen from the fact that in 1939, nearly half the independent population of the city was engaged in work at industrial enterprises, on railroading and on water transport.

In 1920, the population of Petrozavodsk was 19 thousand person, in 1926, it was 27.1 thousand, while in 1939 it was 62.7 thousand; it had increased by 6.5 times in comparison with 1913.

The city, particularly the central part, was destroyed during World War II. All the industrial enterprises were burned and demolished. About 15 blocks in the city's center were converted into rubble. There was 60% damage to the residential areas, the Palace of Pioneers, the Philharmonic Building, the University, the Arcade and many others.

Postwar revival, expansion and reconstruction brought about changes in the appearance of the city, its layout and its sub-divisions. More than 600 million rubles have been invested in construction and improvements in the city. The population is growing rapidly, in 1956 there were 118 thousand persons living in the city.

In 1940, the city's industrial output had increased by 18 times in comparison with 1913, while in 1953, it had increased by 3 times in comparison with 1940. The worker population had increased by 2 times. Petrozavodsk turns out 3/5ths of all the industrial produce of the republic.

Petrozavodsk is the center of the metal-working and machine-building industries, wood and mica processing, the food and light industries, and the building materials industries. The majority of the industrial enterprises in the city work on raw materials obtained within the republic.

---

* The scheduled steamship line Leningrad-Medvezh'egorsk passes through Petrozavodsk. It is 908 km. long (573 km. from Leningrad to Petrozavodsk, 335 km. to Medvezh'egorsk). The distance by rail from Leningrad to Petrozavodsk is 407 km. The water route through the White Sea-Baltic Canal and over Lake Onega joins Petrozavodsk with the White Sea shipping routes. Shorter steamer lines connect the city with the shore settlements on Lake Onega with points on the Vodla river. Suburban communications received a considerable boost by the erection of new communities in the vicinity of Petrozavodsk boat-building etc.).

Specialization at the city's oldest industrial enterprise, the Onega Plant, suffered many changes during the years of Soviet rule. Initially, the plant turned out pumps, drilling rigs, textile machine parts, and equipment for railway sleeping cars. During the construction of the Volkhovskaya hydro-electric power station, the Plant filled orders fro that project. The Onega plant was the first in the Soviet Union to specialize in building road equipment and for a time it occupied the leading position as such an establishment (1926 - 1927). Later on the plant began turning out logging industry equipment, not only for Kareliya, but for the Northern part of European USSR as well. On the eve of the Second World War, the plant was making internal combustion engines, portable electric-power plants, pumps, gas generators for electric saws, tractors and drills.

As the result of large scale reconstruction work following World War II, the Onega plant began manufacture of new, improved types of equipment. At the present time it produces a vareity of equipments for logging and timber transport. These include prime movers with gas generator plants, narrow gauge (850 mm) brake-equipped nine-tone platforms for hauling timber, truck trailers for hauling tree trunks, log-skidding equipment, benches for sharpening the teeth of electric saws and other uses. Together with the manufacture of spare parts for the logging industry and boat-building all occupy an important place in the plant industry. The Onega plant is switching over to the production of tractors and is beginning to turn out the skidding tractor type TDT-40. In association with this the plant is being basically rebuilt and expanded by construction of new shops. The Minsk Tractor Works is providing considerable help in the mastering of new manufacturing techniques. Such specialization at one plant and the scale of production are fully in accord with the development of logging operations in the republic and favour cooperation with the machine-building enterprises in Leningrad and elsewhere. A significant part of the Onega plant's output goes beyond the borders of the republic.

The timber industry is also catered to by the Petrozavodsk Mechanical Plant and the Repair-Mechanic shops of the Yuzhkarelles Trust (TsRM).

The Petrozavodsk truck repair plant builds cranes with a load lifting capacity of up to 1.5 tons, these are mounted on trucks.

The metalworking shop built after the war is of great importance in providing the city construction projects and the population with metalwares, it also provides the fishing industry with motors.

Ship-building and ship-repair, concentrated in Petrozavodsk, meet the needs of navigation on Lake Onega and the White Sea - Baltic Canal, as well as the requirements of the fishing industry.

The large Solomenskiy sawmill, the prefabricated housing combine, the woodworking combine, and furniture industry all work on timber delivered via Lake Onega and by railroad. During the sixth five-year plan, a large automated furniture factory will be built.

The main woodworking enterprise is the prefabricated housing combine, which has a capacity for turning out 200 thousand sq. meters of living space per year. All operations at the enterprise are mechanized; production is organized on the mass production line method. Products from the combine are shipped to many regions of the Soviet Union. During the sixth five-year plan the combine will be expanded considerably; a shop for turning out wood fiber sheets is being built here. Single unit prefabricated houses are being built, for the MTS, at the Solomenskiy sawmill.

During the prewar period the Petrozavodsk ski factory was famous throughout Russia. It produced more than 300 thousand paris of skis per year, this amounted to 1/4 of the ski production in the USSR. During the war, the factory was destroyed.

(Footnote: At the present time ski manufacture is concentrated at other enterprises in the Republic).

It is planned to set-up large scale ski manufacture in Petrozavodsk during the sixth five-year plan.

The fish combine and the mica plant are included in the industrial enterprises of Petrozavodsk which ship their produce mainly outside the Republic. The Petrozavodsk fish combine turns out a wide assortment of fish products and canned fish. There is a tin can shop with the combine. At the present time it is planned to expand and rebuild the combine.

The mica factory processes mica which is mined both in the Karel'-skaya ASSR and the Murmansk Oblast' as well as in other regions of the USSR. This enterprise turns out finished mica and micanite.

The food, light, and building industries in Petrozavodsk mainly provide for the requirement for their products within the Republic.

The construction materials industry is represented by large brick-yards (Sulazhgorskiy and Solomenskiy), alabaster, concrete-plaster and asphalt plants. The stone quarries at Kamennyy Bor located within the city limits, are also part of the construction materials industry. Part of the output of the brickyard is exported outside the Republic, particularly into the Murmansk Oblast'. There will be a considerable increase in production of building materials during the sixth five-year plan (cinder blocks, facing stone, hearth cement, the production of crushed stone for manufacture of prefabricated reinforced concrete structures). There will be a sharp increase in furniture production. The food industry will expand, serving the needs of the city population; a large milk plant is already in operation.

Petrozavodsk is the scholarly and cultural center of the Republic. The city contains the Kareliyan Branch of the Academy of Sciences USSR together with a number of instututes and other scientific establishments, a branch of the Institute of Marxism-Leninism, a section of the All-Russia Scientific-Exploration Institute for Lake and River fish economy, a section of the Central Scientific-Experimental Institute for Mechanization and Energy in the Forest Industry and others.

The city is well supplied with a network of higher and specialized schools: there is a State University (with more than 2000 students) which is training cadres of geologists, agronomists and engineers for the forest industry and other specialists for the national economy of the Republic; a pedagogical institute and a number of technical schools (timber technology, timber industry, architectural-building, and co-operatives), a teachers' college, a doctors'-assistant's and obstetrical school and others.

The Kareliyan State Drama theatre, the Republic Musical-Dramatic theatre, the State Philharmonic Society, a public theatre, the Republic Library, the palace of pioneers, several trade clubs, libraries etc. are located in Petrozavodsk.

The Kareliyan paysage enters into the appearance of Petrozavodsk in many ways. The city's scenery is dominated by Lake Onega, its expense is visible from many of the streets. At the present time, new large buildings are being erected on the lake shore.

A picturesque view of the most animated industrial part of the city, the enormous horseshoe of the encircling shore unfolds before the eyes of the traveler arriving in the city by train.

The main part of Petrozavodsk is situated between the lake shore and the Kirovsk railroad line. The central part of the city is, at the same time, its ancient nucleus. Here, in the valley of the Lososinka river, stands the Onega plant, around which the city grew up.

The best part of Petrozavodsk is situated between the Lososinka and Neglinka rivers. This is the most built-up area, it consists of series of right-angled blocks. Contrast is provided by the Prospect-Boulevard Karl Marx, running along the brow of the Lososinka river valley. The most beautiful buildings are in this part of Petrozavodsk, the best and oldest homes are located here, surrounding the circular Place Twenty-Fifth of October on which has been erected the monumental tribute to V.I. Lenin, consisting of granitic clods. The spacious Kirov Square with the monument to S.M. Kirov is located in this vicinity.

The Lososinka and Neglinka rivers provide a particularly picturesque view in the central part of the city. On the Lososinka, ponds have been built, and small hydroelectric power stations have been built at the dams.

That part of Petrozavodsk located on the right bank of the Lososinka river is the industrial part of the city. Here loom the newly erected and reconstructed buildings of the Onega tractor plant, which now very little resembles the pre-revolutionary Alexanderovskiy plant. The buildings of the Onega plant enter into the overall architectural scheme for the city.

The proximity of the southeastern sector of the city to the Lake has determined the location here of industry, associated with the Lake, serving navigation or processing the raw materials delivered by water. The shore sector here is taken up with docks and the workshops of the enterprises.

It is this part of Petrozavodsk which gives the city the appearance of an industrial and port center. Widespread construction of new living quarters is in progress in the vicinity of the industrial enterprises.

The newer sectors of the city, Kukkovka and Perevalka, are situated beyond the railroad line. These parts of the city are mainly built up of wooden homes, but in different places stone buildings may also be seen.

The part of the town, situated to the north and to the northwest of the Neglinka river, sprang up during the years of the prewar five-year plans and developed particularly quickly in the postwar years. At the present time, the city is growing farther to the north; the city limits already take in the settlements of Rybka, Peski, Solomennoye and Sulazhgora. Apartment buildings stretch along the highway 1st of May and along the shore of Lake Onega.

Solomennoye, one of the fastest growing sectors of the city, lies in a picturesque locality on the shore of the Petrozavodskaya Guba. A sawmill and a brickyard are in operation in this community, as well as a thermal electric power station and other enterprises.

Thus, two new industrial nuclei have formed within the confines of the city, one on the southeast and the other on the southwest.

To the northwest and the southeast, along the bank of the Logmozero and the Petrozavodskaya Guba, which are perpendicular to the city, the community of Sudostroy, is located, part of the settlement of Solomennoye, places of relaxation for the urban dwellers during the summer holidays (Chertov Stul, Zimnik, Baraniy Bereg), the botanical gardens at the University, as well as dachas and pioneer camps.

In compliance with the fifth five-year plan, there was widespread work on the construction and improvement of Petrozavodsk. During the postwar period, more than 400 thousand sq. meters of living space has been built-up or renovated.

The largest new construction in the city is the theatre building on the Kirov Square and the railroad station, the large apartment complex on the Karl Marx Prospect, the 119 apartment residence and general quarters at the University on Lenin Prospect. New construction is going on in all parts of the city.

Final details are being added to the general plan for reconstruction and building in Petrozavodsk, projected over a period of 20 to 25 years. It takes in the main built-up area in the city, about 2,200 hectares. Realization of this plan will convert the Karel'skaya ASSR capital into one of the most beautiful cities in the land. The plan includes the creation of unified architectural ensembles with consideration for the city's position on the shores of Lake Onega. The plan also reflects the specific features of the historic development of the city and the peculiarities of Kareliyan architecture.

The basic task in reconstruction of the city is building it up with stone buildings, mainly 4 and 5 storey structures (in the central part of the city). In order to improve communications between separate sectors of the city, it is planned to build an additional bridge over the Lososinka river. A new large through-way is being built in the center of the town, it has temporarily been named "Railroad Station to Dock". It will run from the railroad station to the building planned for the lake and riverside station. Along the length of this through-way there will be 4 large squares (Privokzal'naya, Gorsovet, 25th of October and Kirov). Large and well-constructed buildings are already growing up around the throughway and these squares. Lenin Prospect is being completely rebuilt along with its adjacent streets, in particular, the State University block. A group of scholarly and cultural establishments will be situated along the Pushkin street facing on Lake Onega: these will be the Republic Library, Physical Culture Palace, the building for the Kareliyan Branch of the Academy of Sciences USSR and the Pedagogical Institute; the Palace of Pioneers has already been built.

Two main parallel throughways are being built in the city; (1) the highway Firs of May, from Goristaya street to Kamenistaya street, (2) Solomenskoye highway along Kuybyshev street and Vytegorskaya street. These arteries will serve, not only the intra-city communications, but they will also unite the capital with the regions of the Republic.

Work on city improvement is being expanded. Its territory is being drained and trees are being planted, waterworks and sewers are being extended, asphalt streets and squares are being built. A base for water sports will be organized on Lake Onega and on one of the ponds on the Lososinka river. It is planned to build a large and beautifully appointed beach along the shore of Lake Onega. The organization of a lakeshore park is also being looked into. This park will be included in the green belt, which will extend from the Shiroko-Slobodskiy Boulevard along Lake Onega to the existing Park of Culture, from there it will cross over to the right bank of the Lososinka river. All the area of dense construction in the city will be included in the waterworks-sewer network. The general plan foresees the laying of trolley bus lines in the city (preparations are already being made for this), the building of a television center; central heating will be brought in in the more distant future.

Kondopoga. Fifty-four miles north of Petrozavodsk, near the railroad station of Kivach, stands the second most important city in western Prionezh'ye, this is the city of Kondopoga. It is an energy hub and a cellulose-paper industry center. The city lies between the two Lakes Nigozero and Onega. It grew up out of a small village. In 1927, its population was 1,270 residents, after ten years it had grown to 14 thousand. In 1923, in the presence of M.I. Kalinin, construction on the hydroelectric power station was begun here, and it went into operation in 1929; the paper factory was opened up in the same year, while in 1935 the cellulose plant went into operation.

During the prewar period, the only pegmatite flour plant in the Soviet Union was built at Kondopoga. Energy was supplied by the local hydroelectric power station. The plant was in a favourable position in relation to the regions in which pegmatite was quarried and to the consumers of the product, who were mainly to the south of the Republic.

The city and its enterprises were practically completely destroyed during the war. During the postwar years, not only were the existing enterprises resurrected, but new industries were set up.

The pivot of the whole industrial complex in Kondopoga is the hydroelectric power station. The largest industrial enterprise, at which most of the independent labour force in the city works, is the cellulose-paper combine. At the present time the combine is being expanded considerably. Together with the basic product, the combine turns out wares out of the wastes from its main process. Thus, for example, a special shop was built for production of insulating sheets. It is planned to utilize sulphite-alkalis for obtaining spirits.

The abundance of cheap electric power, the suitable geographic position of the city on the juncture of the railroads and water transport facilitate the development of other industries (in particular the energy requiring production of high density fire brick and crushing of pegmatite).

Local industry has grown to considerable proportions, its specializes mainly in the mechanized processing of wood (production of box-lumber, tare, skis, furniture and toys).

The power station's bypass Canal passes through the city, dividing it in two parts: the western part, which is the residential section, and the eastern, which is the industrial section. This plan is connected with the prevailing westerly winds, as well as with the gravitation of industrial enterprises towards Lake Onega.

The city's appearance is chaning rapidly; the wooden homes are being replaced by rows of stone 3 and 4 storey buildings, gardens and boulevards are being created, a stadium has been built and so on. A water supply system is being built which takes water from the Canal between the Nigozero and Lake Onega; a green belt runs along this Canal. The pride of the city is the Paper-Makers Home of Culture, situated on an elevation overlooking Lake Onega. Suburban agriculture is evolving near the city.

Medvezh'egorsk is the most important center in the northern Prionzh'ye. It is situated on the shore of Bol'shaya Guba of Povenetskiy Zaliv (at the confluents of the Kamsa river). The city is situated between the Kirovsk rail line and the Lake, and is surrounded by picturesque treed elevations.

Medvezh'egorsk grew up at a fork on the Kirovsk railroad. The only industrial enterprise in that settlement was a small tar distilling plant.

During the years of Soviet rule, in conjunction with the building of the White Sea-Baltic Canal, Medvezh'egorsk was converted into one of the most important industrial centers in the Republic. The population of the city grew from 300 persons in 1917 to 7,000 persons in 1932 and to 18,000 persons in 1941. Medvezh'egorsk now has a sawmill, woodworking and repair-mechanical shops, food enterprises, an electric power station, and a railroad depot.

During the postwar period, industrial enterprises have been rebuilt in the city, a new bakery has been built, construction of living quarters is going ahead on a large scale. A park of rest and culture has been created. A tuberculosis sanatorium has been built in a picturesque, elevated part of the city. According to the reconstruction plan, in anticipation of a considerable increase in the population, it is planned to increase the city area by nearly 2 times. It is planned to build a stadium, water supply station, to bring in waterworks and sewers as well as asphalt streets. All this will convert Medvezh'egorsk into one of the best built cities in Kareliya.

The settlement of Pindushi lies near Medvezh'egorsk, at this settlement there is a wooden-boat building yard which produces lake and ocean-going metal self-propelled barges of great freight carrying capacity as well. After the reconstruction of the Volga-Baltic waterway, the Pinduskiy shipyard will serve the needs of this water system as well.

Povenets. This is a workers settlement. It is one of the old settlements situated on the shore of the Povenetskaya Guba of Lake Onega. In the past, Povenets was the main center of the Olonetskaya District. The "Gosudareva Doroga" pass through Povenets, this road was laid during the Northern War along the shortest route between the White Sea and Lake Onega.

Two frigates, delivered on the orders of Peter the First overland from Archangel, were launched at Povenets in 1702.

At the beginning of the 18th century, a foundtry was built on the Povenchanka river, it ceased operations in 1736.

In later years, Povenets was deserted by its population to the extent that the following proverb about it was composed: "Povenets - the end of the world". Prior to the Revolution, Povenets was a place of exile. Today, Povenets is the newly rebuilt port of start for the White Sea-Baltic Canal. Old Povenets, located during the World War II right on the front lines, was completely destroyed.

Pudozh, a city in the eastern Prionezh'ye is one of the oldest Russian cities, it is not only an administrative-economic center but a cultural center as well. It contains a Pedagogical Insitute, several schools, a library and a club. The city's industry is insignificant; it is represented by a butter factory, a raipromkombinat, and co-operative industry enterprises. Pudozh is situated on the right bank of the Vodla river, but because of the many rapids in the river, steamships do not reach it. Transshipment of freight from water to auto truck transport is carried out at Podporozh'ye, 12 km. removed from Pudozh.

Central Kareliya.

Central Kareliya includes the Segezhskiy, Rugozerskiy and Belomorskiy Administrative raions. The main part of this territory gravitates towards the Kirovsk railroad and the White Sea-Baltic Canal, while the Rebol'skaya (western) part of the Rugozerskiy raion gravitates to the south.

The main branches of the national economy in Central Kareliya are the logging industry, wood processing (particularly cellulose-paper production) hydroelectric energy, the aluminum industry and sea fishing. The building materials industry is also of All-Russia significance.

Most of the forests in Central Kareliya are part of the Segezhskiy, western Kareliyan and Belomorskiy forest economy raions. The forests of the Segezhskiy forest economy raion make up the raw materials base for the Segezha cellulose-paper combine and the Segezha prefabricated housing combine.

Timber from the Belomorsk forest economy raion forests is directed mainly towards points situated on the White Sea coast; part of it is processed at the city of Belomorsk (and at the settlement of Letnerechenskiy), while some of it is shipped beyond the borders of Central Kareliya along the river road and the White Sea-Baltic Canal.

The forests of the Segezhskiy and Belomorskiy forest economy raions produce 1/4 of the total volume of timber cut in the Republic. The Central Kareliyan ratio in timber sawing and woodworking in the corresponding production for all the Republic amounts to more than 20%, while in the cellulose-paper industry it is more than 50%.

In comparison with the Prionezh'ye, Central Kareliya is less well-developed in an industrial and agricultural sense and its economy does not have such a multilaterial character. Economic building is localized to comparatively small territories and large industrial hubs are sparse. However, a great industrial raion is gradually being formed here.

The industry in Central Kareliya is almost completely based on its own raw resources and is represented mainly by combine enterprises.

The new industrial establishments created in this part of the Republic play an important role in the corresponding branches of industry in Kareliya. Thus, the largest cellulose-paper and fishing combines in the Republic are located here, the largest hydroelectric power stations and the largest fishing kolkhozes are situated here. As a result of this, Central Kareliya occupies an important place in the extra-Republic economic exchange, particularly in export of paper and paper products.

The elements of complex economy are very clearly expressed in this part of the Republic. The timber cut within its borders passes through all the operations in production of paper, paper products and prefabricated housing; the fish caught here are used in the production of canned fish.

Enterprises serving the needs of the local population and a local economy have been set up in Central Kareliya; the local agricultural base has improved somewhat. Further development of surburban agriculture is of importance.

There are three large industrial centers in Central Kareliya, these are Segezha, Nadvoitsy and Belomorsk. Two sectors are distinguished within its borders, by the nature of their modern economy these have a number of peculiarities; the sectors are Vygozer'ye and the southern Pribelomor'ye.

The Vygozer'ye formed around Segezha and specializes mainly in the logging and processing operations of the timber industry with a leading role going to the cellulose-paper industry. In the economy of the southern Pribelomor'ye, together with the logging industry, sawing and woodworking industries, fishing and fish processing play a large role.

The western part of Central Kareliya, just as the western part of northern Kareliya, still consists of poorly developed spaces, where exploitation of the timber tracts has been undertaken only in spots.

The southern Pribelomor'ye is a region of ancient fishing industry and fairly well developed timber sawing. The forests of the Vygozer'ye serve as the basis for the development of the timber sawing industry in Belomorsk (formerly Soroka). The raion's own center for wood processing (Segezha) grew up after the building of the White-Sea-Baltic Canal.

The White Sea-Baltic Canal and the railroad, both of which pass through Central Kareliya, unite its two sectors. An important factor in the development and economic unification of Central Kareliya is the utilization of the great hydroelectric power resources in the Basin of the Lower Vyg river, with which the creation of energy consuming industries (aluminum production in Vygozer'ye) is connected.

A chain of worker's settlements has already sprung up between Segezha and Belomorsk, uniting them, as it were, between themselves. These settlements are Nadvoitsy, Parandovo, Idel', Letnerrechenskiy, Sosnovets. The further economic growth of these settled points and the creation of a general, powerful electrical energy system will facilitate the strengthening of economic ties on the territory of Central Kareliya.

Vygozer'ye. The western part of the Vygozer'ye is taken up by the western Kareliyan Elevation, while the eastern part is in the Vygozerskaya Depression, where the Lakes Vygozero, Ondozero and others are located. The elevation of these ancient sea-plains does not exceed 100 to 120 meters. There are great stretches of swamp on the flat watersheds. In the western, more elevated part of the Vygozer'ye, in which peaks reach 300 meters, there is an abundance of steep, craggy massifs.

The hydrological network relates to the Vyg river basin. The upper Vyg river flows into Vygozero from the southeast. A number of lakes and rivers enter into the White Sea-Baltic Canal system (Vygozeri, Matkozero, Telekinskoye Lake and the river Telekinka, etc.). Separate groups of lakes are situated in the western part of the Rugozerskiy raion (in the north there is Nyukozero, Kimasozero and others, on the south there is Leksozero, Tulosozero and others).

The main log driving rivers are the Vyg, Segezha, Onda and others. Logs are mainly free-driven along the rivers, while over the lakes they are moved in bundles or rafts.

Utilization of the Onda river for energy purposes is of great significance for the development of the territory under discussion. In 1956, four units of the Ondskaya hydroelectric power station will go into operation, their capacity is 80 thousands kilowatts. The rushing Onda river is blocked by nearly a half kilometer long, reinforced concrete dam 36 meters in height. A linking canal has been built between Vygozero and the Onda river. The Ondskoye water reservoir, with a volume of 130 million cubic meters has formed above the dam. The enormous Segozherskiy water reservoir is being built for the purpose of providing long-term water regulation.

The forests concentrated along Vygozero and the Onda river basin are being utilized most intensively. The forest tracts in the Segozero basin are being widely developed. On the whole, throughout the Segozherskiy and Belomorskiy forest economy raions, the volume of timber cut in 1954 amounted to 105% of the planned cutting. The great development of logging in the vicinity of the raw materials base for the combines has conditioned the development of a number of new settlements the population of which occasionally exceeds 1,000 to 1,500 persons. Examples of these are Valday, Chernyy Porog, Vacha and others. The Vygozer'ye area is covered with forests to about 54%, while the swamps and water surface amount to about 44%. Logging is being developed mainly in the Rygozerskiy raion where a new narrow-gauge railroad is being built as well as truck roads, and a wood-working industry is being built up (Vachskiy Prefabricated Housing Combine).

There is much fish in the rivers and lakes of the Vygozer'ye. The Vygozero is particularly rich in fish, following the construction of the White Sea-Baltic Canal this lake formed into a large reservoir. Along with this the catch of fish increased. Although, prior to the construction of the Canal, the fish catch in Vygozero amounted to 5 to 6 thousand centners per year, now it amounts to 13 thousand centners per year. The main merchantable fish in the Vygozero are cisco, whitefish and bream. In recent years, Vygozero has begun to be populated by Lake Onega pike-perch.

The fish caught are processed at the Vygozerskiy fish plant. However, the role of the lakes in the Vygozer'ye in the overall Republic lake-river fishing industry is still insignificant.

A large deposit of sulphur pyrite discovered druing the years of Soviet rule is located near the railroad line in the vicinity of Parandovo. Great masses of quartzitic slates have been found in the northern part of the Lake Seletskiy, these could serve as raw material for manufacture of grinding stones and abrasive materials.

Of the other deposits of minerals, it may be mentioned that there are beds of diatomite at Urosozero, limestones between Rugozero and Ondozero. Brick clays of low quality are found near the settlements of Reboly, Rugozero and other places. Most of these deposits are still not being exploited. Thus, the leading branches of economy in the Vygozer'ye are logging, cellulose-paper industry, and in recent times, hydroelectric energy (Ondskaya hydro-electric power station). Industrial center of the Vygozer'ye is the city of Segezha.

A number of agricultural and fishing kolkhozes are situated within the district of Vygozer'ye. Subsidiary industries to the Segezhskiy cellulose-paper combine have received considerable development. The agricultural output of the subsidiary industries meets, to a considerable degree, the requirements for vegetables, potatoes and milk not only of the workers and staff at the combine, but also for the remainder of the population in Segezha. The main agricultural crops are barley, rye and potatoes. Of these, potatoes take up 21% of the planted areas.

Segezha. This is the largest city in Central Kareliya, it is one of the newest cities in the Republic. Prior to the construction of the railroad, Segezha was a small fishing village of less than 10 households.

Segezha is a typical city of the first five-year plans. There is none of the pre-revolutionary past here. The city is laid out on fairly rectangular squares and built up of two-storey cottages and two-, three- and four-storey stone residences. There is a House of Culture, schools and a Trades Institute in the city. Segezha is growing and building steadily, and its population is increasing.

The Segezha cellulose-paper combine is one of the technically most perfect enterprises. Sulphate cellulose, kraft bags (about 300 million items per year) for shipment of fertilizer, cement, ore concentrates of rare minerals etc. are manufactured at the combine from timber delivered to it. The waste products deriving from manufacturing processes are fully utilized; they are used to manufacture turpentine and sulphate soap. Ethyl (vinous) spirits are produced at the hydrolysis plant built at the combine during the fourth five-year plan. During the sixth five-year plan, a complex mechanized manufacturing process for paper bags will be installed at the combine, and a new method of producing cellulose will be perfected. There will be considerably more complete utilization of production waste. Besides the cellulose-paper combine in Segezha, there is a prefabricated housing combine, a fish plant, repair shops for the Segezhles Trust and other establishments.

The suburban type of rural economy is developing in the vicinity of Segezha. A number of transport-industrial settlements (Nadvoitsy, Kochkoma, Idel' and others are situated along the railroad and Canal to the north of Segezha.

Nadvoitsy. At the present time this is a great aluminum industry center. The aluminum plant is the first non-ferrous metallurgical establishment in the Republic. A series of enterprises of local interest operate in the settlement. The settlement is built up of two- and three-stroey homes, it has its own waterworks. The streets are being paved with asphalt. Further development of Nadvoitsy will result in the conversion of this settlement into a city.

The Southern Pribelomor'ye. This area includes the settlements along the Basin of the Lower Vyg river and the small rivers flowing into the White Sea southeast of the city of Belomorsk.

The main transportation trunk lines in the southern Pribelomor'ye are the Kirovsk railroad and the new railroad line running from Belomorsk to Obozerskaya (the northern railroad). The White Sea-Baltic Canal comes up to here from the south (along the Lower Vyg river). The White Sea is of positive economic and transportation significance (the city of Belomorsk). The position of the southern Pribelomor'ye at the hub of the railroad, sea and ocean-lake routes exerts a great influence on the development of its economy.

The eastern part of the southern Pribelomor'ye is taken up with a very swampy coastal plain. On the west the coastal plain is bordered by the Tungudskaya Elevation, which forms the water divide for the Basins of the Kem' and Vyg rivers, and the Ridge "Vetrenyy Poyas", which is situated between the Vyg and Onega rivers.

As a result of this, a considerable part of the southern Pribelomor'ye is covered with swamps and water, the ratio of the forest in the total area of the White Sea forest economy raion is lower than the average for the Republic. The main species in pine (68% of timber reserves). The average timber reserve per hectare of cuttable area amounts to 100 to 120 cubic meters. In the overall forested area, the proportion of mature and aged growth is very great, it amounts to 85% as compared with 73.7% for the Republic.

Cut timber is delivered to points located at the intersection with the railroad and to log-driving rivers. Those landings which have a significant amount of timber are Sumskiy Posad, Kolezhma, Malen'ga and Virandozero. The city of Belomorsk is the largest timber delivery and processing point.

The building of the railroad from Belomorsk to Obozerskaya was of fundamental significance for the development of logging in the southeastern part of the territory, it ensured intensive exploitation of the forests lying to the southeast of Belomorsk. Of particular importance amongst the lestromkhozes are those at Malen'ga and Virandozero, these have a particularly high standard of mechanized logging and transportation of timber and all their logging points are fully mechanized.

In pre-revolutionary times the bulk of the forest products from the Pribelomor'ye went beyond the borders of the Republic, and woodworking operations consisted only of timber sawing; at the present time most of the forest industry products are shipped to the interior regions of the USSR, whereas woodworking has taken on a more qualified aspect, mainly due to the development of prefabricated housing manufacture.

The woodworking industry in the southern Pribelomor'ye is represented by the six sawframe Belomorsk lumber mill and the large house building shop and the Letnerechenskiy prefabricated housing plant. However, the level of woodworking is not sufficiently high here, in comparison with the volume of logging. Incidentally, the favourable transportation conditions in the southern Pribelomor'ye and the building of large hydroelectric power stations are opening up wide possibilities for further development of the woodworking industry. Utilization of the hydroelectric resources in the Pribelomor'ye was begun during the fourth five-year plan. The first stage in the Vyg river cascade has been put into operation, this is the station at Matkozhenskaya (near the settlement of Sosnovets); during the sixth five-year plan, the Vygostrovskaya hydroelectric power station will be built near Belomorsk.

In contrast to northern Kareliya, mining in southern Pribelomor'ye is poorly developed, even though a number of mineral deposits have been explored here during the five-year plans. Quartzites suitable for making pulping rolls for the paper industry, have been found near Lake Khizhozero. Significant outcrops of granite have been found, particularly in the vicinity of the station at Vygostrov. A significant deposit of sea clays, which are suitable for brick manufacture, are being utilized at the brickyard located at station Letnyy on the Kirovsk railroad. In the southern Pribelomor'ye, in contrast to the neighbouring raions in northern Kareliya, only a few deposits of pegmatite formations have been found. Pegmatite fields, which could be considered as a raw materials base for the ceramics industry, have been found only in the vicinity of Belomorsk and Vygostrov. However, the development of these is hampered by unfavourable conditions.

There are very large reserves of peat in the Pribelomor'ye, part of these could be utilized as fuel for industrial establishments.

The fish resources of the White Sea and the interior water reservoirs are among the natural resources which have been utilized for a long time. All the old coastal settlements (Sumskiy Posad, Nyukhcha, Soroka and others) grew up as fishing villages. Even at the present time, fishing is a basic occupation for a significant part of the population in the southern Pribelomor'ye. The Pomorsk coast is the fishing center for catch of herring, navaga and smelt. The White Sea kolkhozes will be required to double their fish catch during the sixth five-year plan. The fish catch in the interior Pribelomor'ye water reservoirs is comparatively small in scale, due to the lack of help and smaller catches in comparison with the sea-going trade.

The fishing kolkhozes on the White and Barents Seas are served by the Belomorsk Motor Fishing station (at Belomorsk). Fishing on the White Sea as well as on the Barents Sea and the Northern Atlantic is done by boats from the Belomorsk base of the Goslov at Belomorsk.

Although earlier, the processing of fish was confined to salting and drying, at the present time the Belomorsk rybokombinats produce not only salted and smoked fish but they also process high quality canned fish which is famous far beyond the borders of the Republic.

A study of the natural peculiarities of the White Sea and the biology of its fish population is being conducted by the Belomorsk Biological Station of the Kareliya Branch of the Academy of Sciences of the USSR.

A number of other organizations located in the Pribelomor'ye are closely associated with the fishing industry. Building and repair of fishing boats is carried out at the Belomorsk shipyard. Qualified medium-level crews are trained at the Nautical Institute in Belomorsk. Large reserves of sea grasses and merchantable water plants are concentrated along the Pomorsk seacoast. However, the trade in sea plants is far from fully t utilized.

The natural conditions in the southern Pribelomor'ye are less favourable to agriculture than they are in the raions situated farther south, but it is possible to engage in both tilling and animal husbandry.

There is a positive average temperature throughout the territory. The length of the vegetation period (the number of days with temperature above +50) in the Pribelomor'ye lasts for 125 to 133 days, i.e., nearly a month less than in the southern regions of the Republic; but it is possible nonetheless, to grow grain crops, potatoes and some vegetables. However, because of the extensive swampiness, the areas utilized for tilling are not very large. Mineral soils occupy a comparatively large tract in the vicinity of the settlements of Kochkoma, Rugozero and Reboly and in some points in the Belomorsk raion. In these places the natural conditions are comparatively favourable for development of agriculture and particularly of animal husbandry.

At the present time the rural economy in the Pribelomor'ye is mainly of a dairy-beef type. This is facilitated by the fact that the coastal hay-mows are also excellent natural fodder areas. Of the planted crops, barley, rye and potatoes predominate. In those localities where there is a preponderance of fishermen in the population, the proportion of potatoes in the planted areas is much higher and amounts to, for example, in the coastal sector of the Belomorsk raion, to 30 to 35% of the planted area.

Potatoe yields are high for this territory; thus, the kolkhoz Budennyy in the Belomorsk raion, situated 240 kilometers from the Arctic Circle, is noted for its high stable yields of potatoes (up to 200 centners per hectare). The development of agriculture at the fishing kolkhozes can become an important source of increased income for them.

In the early stages of its development, the southern Pribelomor'ye was first of all a fishing raion. Later on it became converted into a mainly timber exporting raion. At the present time the economy of the southern Pribelomor'ye is characterized by a more diverse development and is closely associated with other sectors of the Republic.

At the present time, the southern Pribelomor'ye has been converted into a large, on a Republic scale, producer of low coast electrical energy. There are great prospects in store for the raion, in the development of complex processing of timber, improvement of the White Sea fishing industry, the development of mining ore riches, the development of the old and the creation of new industrial centers.

There is one city within the borders of the southern Pribelomor'ye, this is Belomorsk, in addition there are five worker's settlements these are Letnerechenskiy, Sosnovets, Virandozero, Malen'ga and Nadvoitsy.

Belomorsk. The city was administratively formed in 1938 from the old town of Soroka and the worker's settlement of Solunin. Two railway lines, the Belomorsk-Baltic Canal and ocean routes connect at Belomorsk. The railroad lines from Belomorsk (Sorokskaya station) run southward to Petrozavodsk, north to Murmansk and southeast to Obozerskaya. The Belomorsk sea port is located at the exit from the Belomorsk-Baltic Canal into the White Sea. The Belomorsk Bay is surrounded by two sandbars and two breakwaters. A roadstead has been constructed on the artificial island which joins the breakwater with the shore; several sea-going timber transports can load at this roadstead simultaneously.

This transport-geographic position of the city has facilitated its conversion into a large transportation hub, as well as a point of delivery of a large part of the timber cut in the forests in the basins on the northern slopes of the White Sea-Baltic Canal and from the forest tracts gravitating towards the railroad line running from Sorokskaya to Obezerskaya. Construction of the Vygestrovskaya hydroelectric power station near the city will facilitate its further rapid growth.

Belomorsk is a picturesque and distinctive city. It is situated on a multitude of interconnected islands among the channels of the Vyg river at its confluence with the White Sea. There are several fairly large and beautiful rapids on the channels of the river within the city limits. The main part of the city is situated on three of the largest islands. The Administrative, cultural and economic establishments are situated mainly on one of them. The lumber mill and the prefabricated housing shop are situated on another island. The repair shops which serve the logging enterprises in Central and Northern parts of the Republic are located near the lumber mill. The third island is taken up mainly by establishments connected with the fishing industry these include the Goslov, the fishing port, the rybokombinat, the wharf, netmaking shops, cooperages and the shops of the White Sea-Onega steamer line. The railroad station and the associated with its establishments are located on the mainland of the city.

The city contains the Nautical school, which trains the middle grade crews for the fishing industry fleet, several schools, clubs, libraries, a movie theater and other cultural-educational establishments as well as establishments which serve the material needs of the population (a bakery, enterprises of the indigenous industry co-operatives and others.)

The population of the city of Belomorsk is made up of fishermen, sailors, and woodworkers. A number of worker's and fishermen's settlements have been located near the city (Raznavolok, Sal'navolok, Vygostrov, Shizhnya and others).

During the great fatherland war the foundations of a new industrial center were laid at Letnerechenskiy, this settlement grew up during the postwar five-year periods. The worker's settlement of Letnerechenskiy is situated on the Kirovsk railroad and the White Sea-Baltic Canal. This center of construction materials production is the second largest, after Petrozavodsk, in the Republic. The settlement contains alabaster plants, brick and roofing tile yards, lime crushers, prefabricated housing plants and sawmills. The production of wood fiber sheets and hearth cement is being organized. There is a movie theater, wireless station, hospital and high school in the settlement.

The ancient fishing villages of Sukhoye, Virma, Sumskiy Posad, Kolezhma, Nyukhcha and others are situated along the Pomorsk coast. Some of these are four and five hundred years old and in their own day played an important role in the history of the North. The residents of these villages are Pomors, they have long been famous as noteworthy sailors and fishermen. Using boats built here, these people travelled to Norway, to Spitzbergen, Novaya Zemlya and on the Kara Sea. The sailing and fishing traditions are preserved amongst the residents of these villages to this very day. It would be very difficult to find a family which would not be associated with the sea-fishing industry or with sailing. Many famous polar sailors have come from this area, including a native of Sumskiy Posad and famous polar captain, V.I. Voronin.

The fishing villages are normally situated within two or three kilometers of the seashore, there, where it is not so swampy, and almost always on the bank of a river which provides fresh water to the residents. Many ancient large two-storey wooden homes of the Northern Russian type have been preserved in these villages to this very day. The aspect of the White Sea villages has changed considerably during the years of Soviet rule. Most of the villages are electrified and practically all have radio stations; schools and clubs have been built. The residents of the villages have been united into fishing kolkhozes, which the State supplies with improved fishing equipment and motorized boats; in some villages there are fish receiving stations and branches of rybokombinats.

NORTHERN KARELIYA

Northern Kareliya includes the Administrative raions of Kalevaly, Loukhskiy, and Kemskiy. The forest tracts in this territory are part of the Northern and Kemsk forest economy.

Different parts of the Northern Kareliyan territory are sharply differentiated by their own transport-geographic position. Only the comparatively narrow eastern part of the territory is served directly by the Kirovsk railroad and sea transport from the White Sea. Development of the extensive, remote spaces is hampered by the absence of transportation; there are only truck roads here, of which the main ones are the automobile stretches from Kem' to Ukhta and Loukhi to Kestenga, joining the Northwest part of the Republic with the Kirovsk railroad.

Among the log driving routes which provide a means of moving timber out of the remote sectors, the Kem' river is foremost. Timber from the Kalevaly and Kemskiy raions as well as from the northern part of the Rugozerskiy raion move down this river and its tributaries. Exploitation of the forest wealth and the hydro resources unite Northern Kareliya with the Murmansk Oblast'.

On the whole, the economy of the group of Administrative raions under consideration is charaterized by a predominance of forest and mining industry and fishing with various ratios for each of these branches in different parts of Northern Kareliya.

The eastern part of the Northern Kareliya is bordered by a narrow belt of the White Sea coastal plain, where considerable areas are taken up with outcroppings of crystallized rock. Its central part consists of a series of lakeside plains, divided by watershed ridges. There is a host of small and medium-sized lakes here, as well as many large lakes, as, for example, the Pyaozero, Topozero, the Kuyto Lakes, Tikshozero and others.

In connection with the fact that a considerable part of the North is covered by swamps and lakes, the ratio of forested area is lower here than the average for the Republic. In the Kemskiy forest economy raion, the forested area amounts to 58% of the total area, while in the Northern forest economy raion it is 60%. These raions are also characterized by a relatively low average reserve of timber per hectare of exploitable area; In the Kemskiy raion this index equals 99 cubic meters, in the Northern raion it is 78 cubic meters as compared with an average for the Republic of 117 cubic meters.

There is a significant proportion of mature and aged stands amongst the full-grown stands of trees, in the Northern forest economy raion these make up 87.5%, while in the Kemskiy raion they make up 83.7% (as against 73.7% on the average for the Republic). This is the result of poor utilization of the timber resources, particularly in the western part of Northern Kareliya. Only the forests lying along the Kirovsk railroad are being exploited to a more or less significant extent.

The insignificant extent of logging in the central and western parts of Northern Kareliya is accounted for mainly by the difficulties in transportation. Thus, for example, timber cut on Lake Topozero has to be initially bundled and floated down that extended and rough lake, after that it is necessary to break open the bundles and free-float the timber over the rapids on the Sof'yanga river, after that it must again be rafted and towed across the even rougher Lake Pyaozero by tugs. Further on, the timber, now in rafts and then again free-floating, must be passed over the Lakes Sokolozero, Pugozero, Kovdozero and their adjoining rapids infested tributaries and the sectors of the Kovda river. All this complicates the extremely slow rate of log driving and increased its cost. As a rule, a log drive from the headwaters of the Kovda river basin takes two years. The bulk of the timber cut in the basins of the Kem' and Chirka-Kem' rivers and the Kuyto Lakes is floated down the Kem' river, here the conditions of log driving are also very difficult (particularly on the upper Kuyto.)

By the end of the sixth five-year plan, the volume of logging in the Kemsk and Northern forest economy raions will have grown to approximately 3 million cubic meters as against 1½ million cubic meters in 1956. This, and particularly the necessity for hauling out timber from the floating zone of the future Kumskaya hydroelectric power station, requires the revival of the Kesten'gskaya railroad network, the construction of dirt roads and improvement of log-driving conditions.

During the sixth five-year plan, the large Novo-Kemskiy sawmill-woodworking combine and a combine producing cartons will be built for the purpose of processing timber cut in this area. In the future, a hydolysis plant will be built for the purpose of processing wood waste, this will make it possible to fully utilize the timber cut in the Kem' river basin.

The forests of the Kandalakshskiy lespromkhoz located in the Murmansk Oblast' also gravitate towards the forest economy raions in the North. Part of the timber moved down the Kovda river is processed at the lumberyard of the Kareldrev Trust, which is also situated in the Murmansk Oblast'. This is associated with the fact that the Kovda river, whose upper and middle currents flow through the Karel'skaya ASSR, falls into the ocean within the boundaries of the Murmansk Oblast'. Some of the timber from the Northern forest economy raion is also processed at the lumberyards in Kereta.

Northern Kareliya is rich in swift and full rivers (Kem', Kuma and others). It is planned to complete the construction of the Kumskaya hydroelectric power station during the sixth five-year plan and to begin construction on the Iovskaya hydroelectric power station. Energy from these power stations will be transmitted to the establishments in the Murmansk Oblast' and in Northern Kareliya, as well as to the electrified sections of the Kirovsk railroad.

Of the considerable natural resources in the North of the Republic, mention must be made first of all of the deposits of ceramic and mica pegmatites, mainly in the Loukhskiy raion. The chief mining industry at the Present time is exploitation of pegmatite veins. The old mining industry here was based only on the working of mica deposits. The population of the village of Kereta mined mica as early as the beginning of the 16th century. In the 17th century,

mica mining had already become a czarist monopoly. The Solovetskiy monastery, which was given the task of organizing this trade, yearly delivered several thousands of puds of mica to the czar's palace. Traces of mica mines, the so-called "holes", are found even now. Mica mining gradually declined and by the beginning of the 19th century it had practically gone out of existence, but it was revived again in the 20th century in response to the requirements of electrical technology. Sheets of muscovite, the industrial white mica, occur in granitic pegmatites, and occasionally reach great proportions. Sheets of muscovite have been found weighing from 200 to 500 kilograms and up to 60 and 80 centimeters in diameter.

Monomineral quartz is also found in the pegmatite deposits, the crystals of this quartz sometimes exceed 1 meter in diameter. Monomineral quartz from the pegmatite deposits is a valuable raw material and is used in the manufacture of optical glass, chemical equipment, and in radio technology. Granitic pegmatite itself is used as raw material in the production of crude and delicate ceramic wares, mechanically strong and chemically fine glass, enamel wares, etc. The largest pegmatite and mica deposits are situated in the vicinity of Chupa, Loukhi, Poluboyarskaya and Chernaya Reka. Many of the deposits occur in favourable transportation conditions: On the seashore or on the shores of large lakes, or within four to twenty kilometers of a railroad.

Other pegmatite fields have been found in the Northern part of the Republic, these may be considered as raw materials bases. The fields are located at Lake Kuzema, in the southeastern tip of Topozero, in the vicinity of the city of Kem', at the settlement of Poduzhem'ye and others. However, their development is hampered by unfavourable transportation conditions.

In addition to pegmatite-mica deposits, there are other minerals in Northern Kareliya.

The Khizovarskoye deposit of cyanite is located east of Lake Topozero, this is a valuable raw material for the manufacture of fire resistant and acid resistant equipment, as well as for the production of silumin (a silica-aluminum alloy). A deposit of granite-bearing rocks (abrasives) lies at the estuary of the Shuya river within 30 kilometers of the city of Kem'. There are considerable outcrops of granite practically everywhere in Northern Kareliya, these are particularly numerous near the city of Kem' and Pon'goma island and several other places.

Several deposits of diatomite have been found in Northern Kareliyan territory. A layer of greenish-grey diatomic ooze up to 5 meters thick has settled out on the bottom of many lakes and ponds (for example the deposits at Kyapelya). Following processing, this clay in no way differs from the highest quality Danish diatomite.

Besides none-ore minerals, Northern Karelia has deposits of iron and other ores. The deposit of titanoilmenite ores at Eletozero may be of great significance.

Mention must also be made of the pearl industry which today has been abandoned. During the 17th and 18th centuries, pearl gathering was carried on intensively on many of the rivers in the Northern part of the Republic. In the 19th century this industry declined, and at the beginning of the 20th century it died out completely.

Fishing is the most ancient industry amongst the local population. All the ancient Pomor settlements in Northern Kareliya grew up as fishing villages. Such settlements are, for example, Pon'goma, Kalgalsksha and Gridino.

At the present time, fishing is the main branch of the economy for a considerable part of the population of Northern Kareliya. Thus, for example, in the Loukhskiy raion nearly all the kolkhozes engaged in fishing, in the Kemskiy raion, of all kolkhozes, 8 are fishing kolkhozes. The kolkhozes in the Kemskiy raion are served by the Kemsk motor-fishing-boat station, while the kolkhozes in the Loukhskiy raion are served by the Loukhskiy fish plant, which is located in the settlement of Chupa.

The most valuable merchantable fish taken along the Kareliyan coast is Atlantic salmon, which is caught during its approach to the rivers and particularly, its approach to the rivers Kem', Pon'goma and others. Herring is another important fish caught. Throughout the summer in this raion, cod, wolffish and founder are caught. Navaga is taken during the winter in the vicinity of Chernaya Reka in the Kalgalakshskaya Guba and in the vicinity of Pon'goma. In different years, massive migration of Arctic cod is observed during the winter along the Kareliyan coast. Smelt fishing is poorly developed at the present time, it could have great importance. The catch is processed at Loukhskiy (at Chupa) and the Kesten'gskiy fish plant as well as the Belomorsk rybokombinat.

An abundance of fish (the cheaper sorts which can be used as feed for dog teams and foxes) and favourable climatic conditions are the forerunners of the organization in Kareliya of fur animal breeding sovkhozes and fur farm kolkhozes. The produce from fur farming provides a large source of income, it is transportable, and the tending of fur farming enterprises does not require a large number of workers.

The extraction of sea algae and greasses, for example laminarine, eelgrass etc., has acquired continually greater significance in recent years.

Hunting for sea animal, which was of importance 30 to 40 years ago in the vicinity of Gridino-Kalgalaksha, has been stopped at the present time. This industry must be revived.

Agriculture at the fishing kolkhozes is not a main branch of the economy and is of a subsidiary character (milk-meat production). The size of plowed areas is normally very small. For example, at the kolkhoz "Burya" in the Loukhskiy raion, tilled areas occupy a total of 1.2 hectares, these are scattered in small plots of 0.1 to 0.2 hectares each amongst the outcroppings of cliffs, swampy areas and timber.

The poor development of agriculture in Northern Kareliya is associated with the harsh natural conditions. Most of the mineral soils are little suited for tilling due to their stoniness. All the same, there are considerable areas here which are suitable for agricultural development. The most suitable for this are the sandy loam and sandy soils of the lakeside plains and kame hills, and even more so, drained swamps. Work done at the Loukhskiy advanced agricultural station in 1925 permit the conclusion to be drawn that the low-lying swamps can be used as a soil fund for raising fodder and vegetable crops. The sown areas can be considerably extended by draining the swamps. It must be mentioned that the soils require less organic fertilizer, even though they do require mineral fertilization. Extension of agricultural lands has already begun in the Kalevala and Loukhskiy raions by draining the swamps. However, it is still being done on far too small a scale.

The war brought a great loss to animal husbandry. It was not until 1953 that the cattle herds in Northern Kareliya approached the prewar size. The effects of the war were felt particularly greatly in reindeer as well. A reindeer breeding sovkhoz has been organized in the Kemskiy raion.

There is no horticulture in Northern Kareliya, but it is possible. Brilliant proof of this is given in the results of the work done by A.F. Dobrynina, a surgical nurse at the Yushkozerskiy Hospital. More than twenty years ago, I.V. Michurin sent her 20 apple seedlings, and accompanied the shipment with a warm and friendly letter. She carried out successful experiments in the grafting of pears onto the local mountain ash, she successfully grew scores of varieties of tomatoes, marrow squash and other vegetables. During the war, her garden was seriously damaged but it is now almost fully restored.

Kem' is the only city in Northern Kareliya, it is situated on the White Sea coast. It is one of the oldest cities. It is mentioned in the historical documents of the 15th century, when this community belonged to the Novogorod mayoress Boretskaya, who presented it to the Solovetskiy monastery. In the 16th century a wooden fortress was built here. The ancient wooden watch tower has been preserved through the years down to the present time, and in 1714 the wooden, triple-cupola Uspenskiy Cathedral was built, it is one of the best monuments to North Russian architecture.

The city stands on the bank of the rapids-infested and deep river Kem', not far from its confluence with the White Sea. The city straddles both banks of the river. The city has an original cast, everywhere one sees outcroppings of granitic rock and small patches of swamp.

Up to 1916, Kem' was isolated from the central areas of the nation due to the absence of roads and was therefore a place of exile. During the Civil War period the city was seized by the English interventionists. The graves of Communists shot by them are located along the edge of the boulevard, some of the streets are named after those who died.

At the present time the city of Kem' is one of the lumber sawing and fishing centers. A large lumber mill and its worker's settlement is situated in the suburbs on the island Rabocheostrovsk. Near Kemsk, at the settlement of Babguba, there is a large boom which is able to handle more than 1 million cubic feet of timber per year.

Kem' is an important transportation hub; there is a large railroad station here, the inter-raion truck depot serves the trunk highway from Kem' to Ukhta and the settled points in these raions. Sea-going boats are not able to approach the city and anchor at Rabocheostrovsk. The sea port is a suitable place to which to load timber delivered here and from which to ship sawmill timbers, cut at the lumber mill, via the White Sea. There are several schools in the city including two high schools, two clubs, several libraries and a stadium.

The town of Ukhta is a fairly large community, it is the Kalevala raion center. Ukhta is connected by auto road with the city of Kem' and a number of settlements in its own raion, as well as with Kesten'ga. Ukhta contains the lespromkhoz office, the MTS, an electric power station, a raypromkombinat, and cultural-educational establishments (including a school of music).

Ukhta and the Kalevala raion occupy an important place in the cultural history of the Republic. Here, during the 19th century Lenrot recorded many of the songs and runes of the national period of the Kareliyan people. Even in the present day, this raion is famous for its storytellers, minstrels and singers.

.....

JIB/CAN/66/2

CONFIDENTIAL

Copy No 85

JIB(CAN) 2/66

DATE February 1966

JOINT INTELLIGENCE BUREAU
Ottawa

EXTRACTS FROM THE SOVIET PRESS

ON THE SOVIET NORTH

DEC - 1965

~~JAN 1966~~

JOINT INTELLIGENCE BUREAU
Department of National Defence
OTTAWA, CANADA

DISTRIBUTION

External Affairs (D.L. 2)	1 - 2
DGI (DIA, 21) (NSA via DIA, 4)	3 - 45
DGI/DSTI	46
CBNRC (Library)	47 - 52
DIS via JIB(O)LO(L)	53 - 57
FORD via JIB(O)LO(L)	58
JIB(A)	59
CIA	60 - 74
NDC	75
INR (State Dept)	76 - 77
JIB(O)LO(W)	78
JIB(O)	79
Mr. G. Gilbert (DAR)	80
DGP - D. Continental Plans Attention Maj. Beament	81
Mr. M. Iswolsky	82 - 83
Miss M.S. Fleming	84
File	85
Spares	86 - 90

CONFIDENTIAL

SOURCES

Building Gazette	Stroitel'naya Gazeta
Bulletin of the All-Union Scientific Research Institute of Railway Transport	Vestnik Vsesoyuznogo Nauchnogo Issledovatel'skogo Instituta Zheleznodorozhnogo Transporta
Bulletin of Foreign Commercial Information	Byulleten' Inostrannoy Kommercheskoy Informatsii
Civil Aviation	Grazhdanskaya Aviatsiya
Communist	Kommunist
Economic Gazette	Ekonomicheskaya Gazeta
Finance USSR	Finansy SSSR
Foreign Trade	Vneshnyaya Torgovlya
Labour	Trud
Light	Ogonyek
Maritime Fleet	Morskoy Flot
News	Izvestiya
Official Gazette of the USSR	Vedomosti Verkhovnogo Soveta SSSR
Planned Economy	Planovoye Khozyaystvo
Questions of Economics	Voprosy Ekonomii
Railway Transport	Zheleznodorozhnyy Transport
Red Star	Krasnaya Zvezda
River Transport	Rechnoy Transport
Shipbuilding	Sudostroyeniye
Soviet Union	Published in English
Soviet Union Today	Published in English
Statistical Bulletin	Vestnik Statistiki
Truth	Pravda
Water Transport	Vodnyy Transport
Whistle	Gudok
Wings of the Motherland	Krylya Rodiny

GLOSSARY

ASSR	Autonomous Soviet Socialist Republic
CPSU	Communist Party of the Soviet Union
Kolkhoz	Collective Farm (Enterprise)
Oblast'	Administrative Region
Okrug	Administrative Region
SSR	Soviet Socialist Republic
Taiga	Dense Forest Between Tundra and Steppe
YCL	Young Communist League

TABLE OF CONTENTS

Page No.

TRANSPORT RAIL

TRANSPORT ROAD

TRANSPORT WATER

See

ARCTIC

A Find on a Polar Island

A Joint Discovery of Soviet and Danish Scientists

Another wonderful find has been added to the world's mineralogical collection. A new mineral has been found in Greenland by Soviet geologists E. Semenov and V. Gerasimovski who at an invitation of their Danish colleagues, conducted joint geological work on the island for about a month.

We named the new mineral sorensenite in honour of Hening S°rensen, a prominent Danish researcher and professor of the Copenhagen University, who led the Greenland expedition, E. Semenov, D.Sc.(Geology and Mineralogy), told a TASS correspondent.

The new mineral is unique, being so far the first natural crystalline compound combining the atoms of beryllium and tin. This is the first time such a combination of elements was found in one mineral.

The new mineral is of interest not only for mineralogy but also for geochemistry and crystal chemistry. Sorensenite broadens the scientific concept concerning the formation of minerals, ores and their deposits. It is believed that besides Greenland the new mineral may be also found in the Soviet Union, say, in the Kola Peninsula whose geological conditions are in may respects similar to those of Greenland.

The chemical composition and structure of the new mineral were studied by N. Maksimova, M. Kazakova, Stin Andersen and Ole Pedersen.

The practical importance of the find, E. Semenov stressed, is the fact that sorensite-like natural compounds may provide an excellent guide to prospecting geologists.

A scientific publication about the discovery and study of sorensite will shortly appear in Copenhagen in Danish, Russian and English. This is the first joint mineralogical work carried out by Soviet and Danish scientists.

Pravda
18 November 1965
(Full text)

REPRINTED FROM DAILY REVIEW
OF SOVIET PRESS, MOSCOW

North Pole-14

Seven months have elapsed since the establishment of the Soviet scientific station North Pole-14. Keeping to a general westward course, the station has drifted over 800 kilometres (computed on a straight line). At the present moment it is located near Zhannetta Island in De-long Archipelago.

As of 27 November, the station has stopped drifting due to the presence of solid ice-fields. The station North Pole-14 has drifted into an area of the Arctic Ocean which no other stations has ever reached.

Vodnyy Transport
2 December 1965
Page 4 (Full Text)

Courageous Cruise to the Pole

The Decress of the Presidium of the Supreme Soviet of the USSR said: "For the successful fulfilment of the Government's special assignment the following persons are to be granted the title of Hero of the Soviet Union and awarded the Order of Lenin and the Gold Star Medal:

"Rear Admiral Alexander Petelin, commanding officer of the Submarine flotilla of the Northern Fleet:

"Commander Lev Zhiltsov, commanding officer of an atomic submarine;

"Commander Ryurik Timofeyev, chief of the electromechanical combat division of an atomic submarine.

This happened on July 22, 1962 and since then the names of Petelin, Zhiltosov and Timofeyev acquired country-wide fame. Among the naval ships most popular with the people is also the atomic submarine which was named Leninsky Komsomol. This vessel, traditionally described as a "bota" by naval sailors, is in reality a whole factory divided into compartments where the atomic reactor, the miracle of the century and the summit of modern power engineering, is only a component part of a very intricate technical complex. The Leninsky Komsomol is a heroic ship and a cradle of heroes. It has to its credit the transpolar runs to the Arctic Ocean, the penetration into the depth and latitudes which were never reached by seamen before. The crew conquered the last, the 90th northern latitude, delivering the State flag of the USSR to the North Pole which it reached as it moved under the ice of the Arctic.

Try and picture yourself in an air-tight cigar-shaped steel ship going somewhere under the planet's ice cap. Below you have the abyss of the ocean and above the impressive layers of cold water and the heavy ice with the polar night reigning over it. You might feel a bit unnerved if you figure out what forces compress the hull of the atomic submarine. The hydrostatic pressure grows by one atmosphere with every 10 m of submersion. And this means that if the needle of the depth metre shows, let us say, 100 m then the pressure on every sq m of the surface of the atomic submarine is 100 tons. And in spite of this the boat keeps moving as smoothly as ever as it goes to the Pole. One of the crew said jokingly to boatswain Mikhail Luna to turn a bit to the left of the course or to the right so as not to break the bloge's axis. Soon after that Commander Lev Zhiltsov, the skipper, bent to the mike and announced to the crew:

"Comrades sailors, petty officers and officers, we are at the North Pole of the Earth.

There was a loud hurrah in the compartments, for it is the cherished dream of every seaman to reach the Pole, the wonderful point of the globe where there is no geographic longitude and no time of the day, the place where the whole year round there is only one sunrise and one sunset.

I shall not be mistaken in saying that the happiest of all was Vladimir Reznik. The thing is that he reached the Pole as a stow-away. Reznik was a very young sailor of the kind that are not taken for long expeditions. Before the atomic submarine left for the ocean he was working in a hold of one of the boat's compartments, at the orders of his commander. When the warning signal before the departure of the submarine was given he "failed to hear it" and did not leave for shore as he was supposed to. He got into a very remote corner of the hold so he could not actually hear any signal, "just to keep his conscience clear." Later, when the boat had covered several miles and submerged, the sailor got out of the hold and said that they could do with him anything they wanted.

The sailors said that the stow-away would be strictly punished for his "military cunning." However, Rear Admiral Petelin thought otherwise. Naturally, he realised that the young sailor was guilty. However, with his fortitude and selflessness in the difficult moments of the cruise Reznik proved that such men as he can very well be taken for long expeditions. As a result the Admiral applied for having Reznik awarded a government decoration. That was how there appeared on the atomic submarine a unique stow-away which was awarded the medal "For Valour."

Komsomolskaya Pravda
19 December 1965

REPRINTED FROM DAILY REVIEW
OF SOVIET PRESS, MOSCOW

CONSTRUCTION

Northern Construction

The North, which was always considered as a frozen wasteland, is now acquiring an industrial character. Consequently, there is an ever increasing requirement for planning and construction work for the development of inhabited localities. Alas, both planning and construction do not always follow the correct line.

Let us take the rapidly expanding locality of Nefteyugansk in the Tyumen' Oblast' as a perfect example of faulty initial planning. Officially it would seem this was a general plan for the development of this settlement on the Yuganskaya Ob'. In actual fact no such plan has ever been finally approved. In the meantime, construction sites were authorized at random with the result that the sawmill, storage depots, garage and auxiliary enterprises have been established in the residential areas of the settlement. Eventually these enterprises will have to be moved to new locations which will entail tremendous costs.

Individual construction projects have similar shortcomings, standard plans of which there are few are seldom used. Thus every man in charge of a construction project, builds according to his own ideas. Dwellings of various design do little to embellish the overall appearance of the settlement.

A question arises. What in fact should a northern building look like and how should it be built? There is a total lack of plans for construction in the North. In most inhabited localities, standard housing consists of 2 storey squared timber buildings of 8 apartments each. The apartments consist of 2 or 3 rooms with communal kitchen facilities.

There are few large families in the north that would require a three room apartment. As a result two to three families share one such apartment. Due to a lack of pantry space and basement storage, people are forced to keep their fuel supply, vegetables and sundries in the living quarters. Additions in the form of storage space are urgently needed for these buildings.

The structural elements of these buildings should be better adapted for northern conditions. Roofs with pediments require special reinforcements to withstand northern winds. Walls made of squared timbers are not wind or water proof.

Recently the Leningrad Zonal Scientific Reasearch Institute of Experimental Construction (NIIEP) suggested a plan for multy storey building with air conditioning systems. This seems very premature. At the present moment such a simple problem as the supply of running water to the upper floors of 5 or 6 storey buildings has not been solved.

Experience has shown that the most practical housing would be 2 to 3 storey buildings constructed of fireproof materials. Walls could be built of "arborile", sandless concrete or bricks. All of these could be produced locally from raw materials which are readily available in the north.

The author of this article was N. Zapatrin, Chief Engineer of the building administration No. 10, Glavtyumenneftgazstroy.

Stroitel'naya Gazeta
28 November 1965
Page 3 (Full text)

New Construction in Murmansk

High rise apartment buildings are now being built in Murmansk. Work has also been started on a library which will hold one million volumes and on a hotel for 660 guests.

Sovetskaya Rossiya
8 December 1965
Page 1 (Full text)

Giant Marsh Digger

The equipment of the oil and gas pipe layers is being constantly extended. Testing was recently completed on the "EKB' marsh excavator created by the special designing bureau of the "Gazstroimashina" plant of the Ministry of the Gas Industry of the USSR. The mass production of the machine has already been approved.

The new machine can be used for laying pipe lines, for transport construction and peat extraction.

The object of our search, the great marshland excavator stood directly before us, behind some birch trees near Shatura. We could not reach the spot by car, of course, for we bogged down some three hundred yards away. We had to get out and trudge the rest of the way through the sticky soggy marsh.

Coming to meet us were the excavator operator Nikolai Korshunov and the machine's chief designer, the engineer Yuri Guryev. They led the way to the excavator Though the giant machine had sunk into the marsh a little on its huge wheels, its half rounded pontoon rollers were almost shoulder high.

Nikolai Korshunov climbed into the cabin and started the engine. The excavator's dipper sank into the swamp, gathered a huge portion of liquid peat, swung it up and dumped it aside. The big machine merely rocked a little on the yielding ground.

Korshunov now signaled that he was about to start digging the the next portion of the trench. The big rollers went into action, moving the excavator back some yards. And the dipper started it work again, digging into the peat and swinging aside to disgorge its load.

Fascinated by the scene I never noticed that my rubber top boots were slowly sinking into the swamp. Even the frozen upper crust could not support me. But why wasn't the excavator sinking?

"you'd better move to another spot or you'll get you boots full of water!" warned Guryev. "It's not dangerous here in the winter. In the summer you've really got to be careful."

The engineer went on talking about the machine, actually answering the questions I had meant to ask him. There were all kinds of swamps, he said. Some were bumpy and fairly firm. A man could make his way across such a swamp, though with difficulty. The deep and viscous ones should be avoided. You might be unable to break free and be drawn under. The worse were the overgrown reservoirs. These are covered with peat and grass, but murky viscous depths lie below. The geologists have put this type in their category No. 3, the most dangerous.

Rocking on its huge roller tires, the excavator could negotiate any swamp. It was indeed designed to function in the most dangerous spots. The "EKB" stood on eight paired pontoon rollers with a total water displacement of 18.6 tons. But why water displacement? For the simple reason that the machine was calculated to float. Since the machine itself weights 17 tons, it has a reserve of a ton and a half to keep it afloat. The excavator can operate in any swamp, cross bodies of water, and move along dirt and paved highways on its own power.

"The roller pontoons have a diameter of 1.5 meters," said Guryev stroking the huge tread of the tires. "Each roller is nearly two meters wide. Which means that the 17-ton excavator brings comparatively little pressure to beat on the ground it treads, from 0.1 to 0.12 kilograms per square centimeter. In this respect we who are waring rubber top boots are four times heavier than the excavator," he joked. "The machine has a retractive dipper with a 0.4 cubic meter capacity and a dragline with a half cubic meter capacity.

"Judging by the orders we have been receiving," concluded the designer, "the "EKB" is indispensable in the marshy northern regions of our country. When mass production begins, the first of our machines will evidently go to Tyumen Region and other marsh lands."

The very first of these machines was set working near Shatura, and the personnel of the Orekhovo-Zuyevo Peat Works were pleased when they learned that the big excavator was to be left at their disposal on its experimentation

Stroitel'naya Gazeta
12 December 1965 (Abridged)

REPRINTED FROM DAILY REVIEW
OF SOVIET PRESS, MOSCOW

ECONOMIC DEVELOPMENT

Routes of Feats

USSR Minister of Gas Industry A.K. Kortunov Answers Question from Komsomolskaya Pravda

Question. How has the gas industry of the country been developing?

Answer. It was mentioned at the September Plenary Meeting of the CPSU Central Committee that this year's gas output will reach 130,000 million cubic metres. Over the past decade output in the gas industry has increased 13-fold and the industry has become one of the most important industries in the country.

Soviet boys and girls, our wonderful YCL volunteers, have contributed a great deal of labour, knowledge and enthusiasm to make our recent achievements possible. We are proud to say that the gas industry has been created by the hands of the young.

Gas has found extensive applications in the economy. It burns in open hearths and blast furnaces, raising their productivity and improving the quality of metal. Gas is among the principal chemical raw materials. It provides fuel for the homes of 40 million people.

Question. What are the gas industry's prospects?

Answer. The industry has very good prospects. Soviet geologists have in the past two-three years discovered new and very rich deposits in the Central Asian republics and in the north of Tyumen Region. Gas has been found at several points of the Kara-Kum desert, on the Caspian coast, in the Turkmen and Kazakh republics. A ramified network of gas pipelines from Central Asia to the Centre has begun to be built.

The route of the new trunk line, aggregating 6,600 kilometres in length, starts at Kara-Kum, runs through Kyzyl-Kum, crosses the Volga and ends at Moscow.

The bowels of Tyumen are not only rich in oil but also contain a vast amount of excellent gas. Rich deposits, equal to those of the well-known Gaslin gas field, have been discovered in the taiga, near the little town of Tarko-Sale. Gas has been found also on the Yamal Peninsula. The Tyumen deposits will serve the country in good stead. Designing of a new large gas pipeline system has already been started. It will run through Vorkuta and Cherepovets to Leningrad, branching off to Minsk too.

There are very good prospects in the Ukraine, where much gas is deposited at medium and large depths. Gas drilling here must be accelerated.

This is only part of the work we and the geological prospectors are faced with in the coming five years. For the gas output in 1970 must be raised to 240,000 million c.m.

Question. What will your ministry's 'job' be?

Answer. I want to stress once more the foresight and timeliness of the decisions of the September Plenary Meeting of the Central Committee. The branch management of the economy will make for better centralized technical and economic guidance, and for more effective application of the latest achievements of science and technology in industry. Our industry too may serve as an illustration of this.

The integral process of extraction, transportation and processing of gas has until recently been unjustifiably split up. The former State Committee on the Gas Industry engaged in the construction and exploitation of trunk lines while the production of gas was controlled by the different economic councils. This acted as a serious brake on the development of the gas industry.

The newly created ministry will have to take charge of a complex and multibranched industry. All research and designing in the industry will soon be concentrated in the hands of the ministry. It will be responsible for the exploitation of all gas fields in the USSR and for the entire system of gas trunk pipelines. In addition, the ministry will continue increasingly to build gas and oil fields, as well as trunk pipelines for gas, oil and oil products. The ministry will also have charge of the factories processing by-product gasses. A great effort must be made to stop the loss of valuable products, to improve the supply of raw materials for the chemical industry, and to increase the supply of gas to the population of the towns and country. The ministry will manufacture specialised building machines and gas apparatus, for which there is a very strong demand.

So you see, we have a big job on hand. The work will be highly complex but fascinating and creative.

Question. What would you like, Comrade Minister, to convey through our newspaper to the young workers of the gas industry?

Answer. First of all, I should like to express once more my gratitude to those boys and girls who shoulder to shoulder with their adult comrades marched on the roads of new construction. The young people had may difficulties to contend with, but came out of the test with flying colours. The young gas pipeline builders are our Guards, our most mobile and crash force. I want to emphasise that not only are they quick to move and strong morally and physically, but that our young workers and specialists are well-educated and efficient people who have a thirst for knowledge and progress.

The Bukhara-Urals gas pipeline was a crash all-Union project of the YCL. It was patronised by the youth of many republics. The staff of the YCL Central Committee worked and continues to work most vigorously on the construction project. I know how much this staff has done, how greatly it has helped us, the men in charge of the work. Even now, seeing the little towns with their most modern compressor plants in the desert, one finds it difficult to believe that all this has sprung up in a few years. Yet, it has all been done by the hands of the young. They have matured on the hot plateau of Ustyurt, and how the frigid Arctic is awaiting them. I am confident that the youth will successfully shoulder their new responsibilities too.

The ministry will see to it that the living conditions of the young builders and gas industry workers are improved.

One of our conerns is the building of well-appointed permanent villages for the families of the builders. Yes, the conditions of our builders are such as to keep them away from their homes most of the time. And this is just why we must see to it that they feel cosy and comfortable when they are home. Construction of permanent villages will be conducted with particular intensity near Moscow, in the Urals and Tyumen Region.

This will not solve all the problems facing the gas pipeline builders. The new areas through which the pipelines will pass are difficult places in many respects. It is mostly desert, taiga, arctic regions. One can easily picture them. Certainly, not everybody can stick it out there.

We have a lot of powerful machines, and the state does not spare money and means to improve the technical equipment of the builders still further. It is with machines, not spades, that we conquer nature. But machines without men are useless. The basic force is people, strong, efficient, dedicated people.

The gas pipeline construction routes are routes of youth. The romance of achievement, of the conquest of nature, the sense of one's prowess, the feeling that one has left some trace on the earth - this is what the construction of our pipelines denotes. Reports have now begun to come in from the construction sites and factories of remarkable deeds performed by young people who have taken up the watch in honour of the 23rd CPSU congress. To meet the Party congress fittingly is to make another step forward into our tomorrow. We call upon the young to join our ranks. The builders of the "blue flame" are always ready to welcome the YCLers, the young people, as fellow-travellers.

Komsomol'skaya Pravda
16 October 1965
(Full text)

REPRINTED FROM DAILY REVIEW
OF SOVIET PRESS, MOSCOW

Siberian Columbuses

E. Borodin

A geological map occupies the whole wall in the office of Vitali Shcherbinin, manager of the Khanty-Mansi Geophysical Trust. They Tyumen Region is thickly covered with bold lines and circles on this map.

The region was a blank spot on the map for a long time. Vast as a sea, it allured people and frightened; frightened with uninhabited lands, impentrable thickets, swamps and eternal frost.

Heated discussions raged over the voiceless blank map. Many claimed that the bowels of Western Siberia were empty. But Academician I. Gubkin stood out in defence of Western Siberia, who said that the region should contain oil. This theory was warmly seconded by scientists N. Rostovtsev, M. Korovin and others. The number of supporters was growing and in 1959 a planned offensive was launched on the vast expanses.

Gravimetry specialists Zemskov, Iskhakov, Morgun, Butakov and hundreds of others were the first Columbuses here. They covered by air or by deer sledges over four million kilometers in a short period of time, detected an approximate depth of solid rock bedding and thickness of relatively light sedimentary deposits. Yuri Kopelev's group which employed the unknown-yet method of telluric current or electrical prospecting, worked side by side with the gravimetry specialists.

But according to the classical theory, oil and gas deposits accumulate in those areas where sedimentary rocks are uplifted and form enclosed concave domes or cupolas, which could be found only with the help of seismic prospecting.

Seismologists started their exploration in the Tyumen Region from the area of Beresovo, an old Russian village in the lower reaches of the Ob. Here Alexandr Bystritsky's group of deep drilling struck natural gas.

A geological department was set up in Tyumen, which was headed by Yuri Ervie (later on he was awarded the title of the Hero of Socialist Labour and the Lenin Prize). Hismain credit lies in the fact that he expanded the geophysical service -- eyes and ears of geologists -- and worked out a bold plan of a large-scale prospecting. Seimologists headed for areas which Ervie considered the most promising ones: eastern foothills of the Urals, middle reaches of the Ob, the Ta River basin and even the Yamal Peninsual situated within the Polar Circle.

Popovich's expedition consists of four teams which move along their routes. They make relief survey of underground strata of a relatively small plot in every four-five kilometres and then go further. Only after they strike domes, the ground seismic exploration starts. It will indicate precise bounderies of the structure for the drillers to continue the started work. This method is very reasonable and it will exclude in future any blind prospecting.

Tugovikov knows the territory so well that we flew by helicopter to Leonid Daniel's team without any mistake. Tall lads came out of the tents. Yes, a weakling has nothing to do here. He will not be able to trudge even ten steps over mossy swamp, will not lift a heavy load. While these ones brave anything.

Joy is depicted on their faces: discoveries make these people happy. Seismologists know that boisterous life will follow them and will transform this out-of-the way and distant region.

Sovetskaya Rossiya
4 November 1965
(Abridged)

REPRINTED FROM DAILY REVIEW
OF SOVIET PRESS, MOSCOW

The Oil Industry - A Priority Project

The following are extracts from an article by V. Shashin, Minister of the Oil Production Industry USSR, wherein he discusses the present level and future potential of the country's resources.

The joint organization Tatneft' has fulfilled the target of the Seven Year Plan in June 1965 and will produce 40 million tons of oil in excess of the plan. Other organizations will also exceed this plan in the following amounts:

Organization	Million tons
Grozneft'	12.2
Pemneft'	8.7
Turkmenneft'	7.9
Ukraine	3.7

In the course of the first six years of the plan, 355 new oil deposits have been found. Important subterranean sources of oil have been discovered in West Siberia, West Kazakhstan, Checheno - Ingushetiya, Komi ASSR, Ural - Volga and the Ukraine.

It is intended to raise oil production up to 355 million tons by 1970. This amounts to an average yearly increase of 22 - 23 million tons in the course of the Five Year Plan. The question arises as to which areas will provide such high yields.

Tartary, Bashkiriya, the Kuybyshev and Perm' oblast' are well known oil producing areas. To this day these areas have a major role in the rapid expansion of oil production. The level of production will be maintained throughout the five year period. These areas, however, will not yield greater amounts from year to year as in the past. In the Urals - Volga area for instance the yearly increase in production used to reach 12 - 14 million tons. During the forthcoming five year period it will average to about 8 million tons per year.

Consequently, it is imperative to open-up new oilfields and establish large oil producing centres. This applies in the first place to Western Siberia and West Kazakhstan. New deposits are expected to account for four-fifths of the total increase in oil production in 1970 while presently exploited deposits will yield only one-fifth.

To the present day 32 oil deposits have been discovered in West Siberia. Four of these namely Trekhozernoye, Megion, Ust-Balyk, West and North Surgut have been made ready for large scale operation. These deposits will constitute the core of the oil industry in that area. Eventually West Siberia will produce not less than 100 million tons of oil per year.

Ekonomicheskaya Gazeta
No. 47, November 1965
Page 12 (Extracts)

New Reference Book on the Soviet North

"The North-Eastern Economic Region" - is the title of a new book which deals with the economic development of Yakutiya, Kolyma and Chukotka. The book consists of a collection of articles written by scientists and professionls in various fields whose work is related to economic and industrial problems in these areas.

The region under discussion will no doubt continue to grow in importance in the overall economic potential of the country. It occupies over 20% of the territory of the USSR and is a major source of diamonds, gold, tin, mica, seafood and furs.

G. Granik, "Kandidat" Economics and section head, Study of Productive Forces Council of Gosplan USSR presents detailed information about the present and future of the North-East in the chapter "Main trends in economic development". He analyses the following resources:

Diamonds	Oil
Gold	Gas
Tin	Salt
Mercury	Fish
Ferrous Metals	

The chapter under the title "Industry" (by mining engineer R. Fayerstein) contains statistical data and examples.

The book emphasizes the subject of transportation, a major porblem in the north (V. Shapalin, Kandidat, Geography). S. Zhelnin, head of the geological-survey directorate, North Eastern Economic Board (Sovnarkhoz) presents a study of mineral resources.

Other chapters deal with the following subjects:

Building materials	Timber resources
Fishing	Agriculture

Ekonomicheskaya Gazeta
No. 47, November 1965
Page 39 (Full text)

The Mine Komsomol'skiy

Shaft construction work has been started at the site of the new mine Komsomol'skiy in the Taymyr. This will be the second mining enterprise of Talnakh.

Ekonomicheskaya Gazeta
No. 47, November 1965
(Full text)

Where Did The Geologists Go?

O. Ivanov

The close of autumn is probably the only time when geologists can meet under one roof. Just now, prospectors throng the rooms in the Geological Ministry of the Russian Federation. The management of local boards have come to Moscow to report the last season's discoveries and to map out the strategy of the forthcoming explorations. In the offices, colour charts are being unfolded, rock samples produced, and spectral and chemical analyses deciphered. Where did the geologists go? What have they found?

The large map hanging on the wall is so heavily coloured it resembles a rug.

"More than 200,000 people took part in the reconnaissnce and prospecting in the republic this year," I.L. Soloveichik, head of the Geological Fund of the RSFSR, told me. "Explorations are mainly pursued in Siberia and the Far East."

"Can you tell me the number of discovered deposits?"

"This is rather difficult, because there are dozens of names in the list. Gold prospectors have done a good job. Fifty-two placer deposits have been found in nine months. Rich deposits have been found in Kamchatka, in the lower reaches of the Kolyma River. Marine placer deposits have been discovered on the shore of the Bering Straits in the Chukotsk Peninsula, apart from riverside fields.

The big oil fields of Western Siberia are well known. In the last two years the outlines have been discerned of a second oil-and-gas bearing area in Novosibirsk Region, which seems to be as promising as the first one centred around Tyumen. Prospecting for oil and gas has been on for years in Magadan Region and in the Chukotsk national area. The industry rapidly developing in these regions badly needs local sources of fuel. It is to be hoped that this severe land will bring forth more wealth."

The pointer which I. Soloveichik held in his hand halted on Khabarovsk Territory, where a very promising mercury deposit has been found. A new manganese-bearing field has been discovered in Irkutsk Region. It will become a local source of manganese supply for the metal making industries of Siberia.

Geologists are currently looking hard for potassium salts in Krasnoyarsk Territory and Irkutsk Region to meet the needs of Siberian agriculture in mineral fertilisers.

"You described finds in the eastern areas of the USSR. And what about explorations in the Urals?

A rich deposit of iron ores has been found in Miassa district, and bauxites in the vicinity of Alapayevsk in Sverdlovsk Region. New interesting information has been obtained by the geologists surveying the Vishera diamonds. Diamonds have been found which surpass the Yakutian one in quality."

There are many discoveries to the credit of the geologists of the Russian Federation this year. New searches for raw materials for industry and agriculture lie ahead.

Sovetskaya Rossiya
18 November 1965
(Full Text)

REPRINTED FROM DAILY REVIEW
OF SOVIET PRESS, MOSCOW

Oil Industry makes Fast Progress

On the Basis of the Branch Principle

The Ministry of Oil Industry operates on the national and republican level. An identical ministry has been set up in the Azerbaijan SSR. The Oil Extraction Administration has been established in the Ukraine and relevant associations, in Central Asia and Kazakhstan. The regions, territories and autonomous republics of the Russian Federation that have a developed oil industry retain the associations that were established there previously. These associations are directly subordinated to our ministry.

Besides production enterprises, the Ministry will have under its authority all the research and designing organizations concerned with various aspects of oil industry development.

We strive to organize the work of the Ministry's apparatus in such a way that all its divisions should concentrate on the achievement of accelerated development rates at high economics and performance rather than exercise petty tutelage over the enterprises. The rearrangement of industrial management opens up excellent opportunities for that.

Results of the Seven-Year Plan and Prospects of Growth

The Soviet Union possesses a powerful and fast-growing oil industry, which has attained a particularly high level over the current seven-year period. This year we shall extract 242 million tons of oil, that is two-odd times more than in 1958.

The assignment of the seven-year plan has been fulfilled ahead of schedule. Altogether, the national economy will receive about 30 million tons of oil over and above the target figures for 1959-1965.

The Tatneft association fulfilled the seven-year plan of oil extraction last June and will produce more than 40 million tons of the liquid fuel above the plan. The following associations will surpass the seven-year-plan assignments for oil extraction: Grozneft (by 12.2 million tons), Permneft (by 8.7 million tons), Turkmenneft (by 7.9 million tons) and the Ukrainian oilmen (by 3.7 million tons).

Thanks to the fact that the progressive branch of the fuel industry developed at a priority rate, the national economy was kept supplied with oil products. The share of gas and oil in the pattern of the country's fuel balance increased from 31.8 per cent in 1958 to 51.6 per cent in the current year. This saved the national economy more than 13 thousand million roubles.

The workers of the drilling organisations did excellent work. The volume of drilling work grew 1.6 times and that of prospecting work, to an even greater extent.

In the first six years of the seven-year plan our prospectors discovered 355 new deposits including the fabulously rich oil resources in Western Siberia, Western Kazakhstan, Checheno-Ingushetia, Komi ASSR, Uralo-Povolzhie and in the Ukraine. This creates favourable conditions for the further priority development of the oil industry.

The techniques of developing oil deposits have been improved considerably. Contour and peripheral flooding is used on a broad scale. Now up to 67 per cent of all the oil are extracted with at artificially maintained field pressure.

Labour productivity in the oil industry grew 1.9 times over the seven-year period. The prime cost of a ton of oil was reduced by 16 per cent.

The oil extracting industry of our country is now securely holding the second place in the world. The gap in the volume of oil extraction between the United States of America and the Soviet Union was reduced considerably in the current seven-year period.

New big tasks will be set the workers of the oil extracting industry in the next five-year plan. As early as in 1966 the volume of oil extraction is to be increased by 21 million tons. To compare, the maximum increment in any of the preceding years was 19-20 million tons.

It is necessary to make strictly rational use of the capital investments assigned for the purpose. Besides, it should be taken into consideration that oil extraction in many big fields in the Middle Volga and the Urals has reached its maximum. Thus, we shall have to achieve the increment planned for 1966 chiefly at the expense of smaller deposits. That is why it is necessary to speed up in every way the laying of pipelines to new fields, the construction of oil collectors, pump stations and other projects. The volume of work is small in a number of places. With the help of the building organizations of the USSR Ministry of Gas Industry, the oilmen will be able to cope with such jobs in a short time.

The successful fulfilment of the plan for the coming year is connected with the further intensification of the deposit development and the boosting of the oilfield output. Where bores have been drilled, pipelines laid, and plant installed, it is necessary to extract as much oil as possible, even more sometimes than provided for by the plans. The surest road to this is to increase water injection withing optimal limits and to use flooding on the maximum scale.

The oilmen have other reserves at their disposal. They consist, in particular, in a fuller development of the deposits still made insufficient use of.

Oil extraction is to be increased to 355 million tons by 1970. This means that the Ministry is to ensure the average yearly increment of 22-23 million tons during the next five-year-plan period. A legitimate question arises: how and on account of which areas are such high tempos to be achieved?

Such oil extracting centres as Tataria and Bashkiria, Kuibyshev and Perm regions are known all over the country. They are still playing a leading role in the turbulent growth of oil extraction, and are going to retain this role in the coming five-year-plan period. But they cannot keep increasing the volume of oil extraction at the former rate any longer.

Consequently, it is necessary to speed up the bringing in of new oil-rich areas and the construction of big oil extracting bases there. This refers, above all, to Western Siberia and Western Kazakhstan. In 1970 we plan to obtain 4/5 of the total increment at the expense of new deposits and only 1/5 from the areas that are being developed now.

By now 32 oil deposits have been discovered in Siberia. Four of them --Tryokhozyornoye, Megionskoye, Ust-Balykskoye as well as West- and North-Surgutskoye--have been prepared for development. Exploration drilling and oil extraction are being carried on there. In the nearest future these deposits will serve as a base for the development of the branch in the given area. Subsequently West Siberia will be yielding no less than 100 million tons of oil a year.

Uzen, a multi-layer deposit, is being put to commercial use in Western Kazakhstan. The Zhetybai deposit is being prepared for experimental development. The aim is to bring their oil output to 15-20 million tons by 1970.

In Byelorussia, oil prospecting was conducted for many years. It was crowned with the discovery in Pripyat depression of Rechitsky and Ostashkovichsky deposits. The first exploratory wells were drilled on the former this year. This area will also make its contribution to the development of oil extraction in the country.

Deposits dating back to mesozoic period are to be developed in the Northern Caucasus. Checheno-Ingush ASSR will occupy a leading place in this respect.

The volume of oil extraction in the Ukraine will double. The bulk of the increment will come from the deposits of the Dnieper-Donetsk depression.

The role of Turkmenia is increasing. The barsa Gelmez deposits will be brought in under the complex conditions of the desert.

Azerbaijan, our oldest oil producing area, will also increase its output.

Geologists, geophysicists and prospect drillers will be assigned responsible tasks in the coming five-year period. Their duty is to double the prospected resources in 1966-70 as compared with the past five years. This is quite a feasible task, given a scientifically substantiated distribution of geological prospecting work in individual areas, higher efficiency and lower cost of all kinds of prospecting work.

Conditions of Successful Operation of the Oilfields

The most important task is to ensure excellent economics and performance in the new five-year plan period. How to achieve that?

In the first place it is necessary to speed up the introduction of advanced technology and processes into the oil and gas extraction and well drilling; to vigorously improve the methods of maintaining field pressures and to use them on a broader scale. Calculations show that water injection into productive strate can ensure a yield of more than 205 million tons from newly-drilled wells alone in 1966-1970. In the branch as a whole, the economic effect of the field pressure maintenance method will amount to no less than a thousand million roubles over the five-year period.

The raising of the oil yield factor is another major task facing us. I mean the extraction of maximum amounts of oil using hydrodynamic and other methods. These methods include the method of thermic effect upon the stratum. The essence of the method is that the stratum is ignited in several points. The heat lowers the viscosity of oil and increases, at the same time, the energy of the gas contained in it. This, in turn, goes to increase the oil yield factor. Broad industrial experiments will be conducted on number of oilfields in this direction.

The heating of the near-well area with a heat-carrier, such as water steam or electric current, is a variety of the thermic method. Preparations are now in progress for the production of equipment which will make it possible to put this efficient novelty to use.

The oil yield is increased considerably by the joint-divided method of development of several strata via one well and water injection into various strata through one well. This method merits the closest attention of the oilmen. The methods of the joint-divided development of multi-layer deposits and divided water injection will be particularly effective in the new years of Western Siberia and Mangyshlak Peninsula.

Much depends here on the research and designing organizations. Their duty is to improve deep pumps, to use materils of higher wear resistance, to enhance the dependability of components and units.

The growth of the oil yield factor is connected with the improvement of the hydrodynamic methods of stratum pressure maintenance. Various processes facilitating the ousting of oil by water are being tested now. Among them there are the injection of dense water (water possessing high viscosity); water saturated with carbon dioxide or treated with surface active substances.

Research organizations continue to seek and elaborate other methods of increasing the oil yield, such as the injection into the strata of all sorts of solvents (liquified gases, in particular) as well as heavy hydrocarbon gases under high pressure etc.

Of late there have appeared broad possibilities of speeding up technological progress in the oil industry. All the new valuable research findings should be promptly introduced into production. With this aim in view, the Ministry is going to hand over certain parts of various oilfields to research organizations which will use them as proving grounds for testing new methods of intensifying oil extraction.

It is very important to solve the problem of improving the collection and transportation of by-product oil gas.

This is not only the matter of the branch being inadequately supplied with pipes, compressors and gaspetrol installations. The big losses of oil gas result from the unsatisfactory technical standards of the oilfield outfit. The projects of the oil and gas collection systems are complex and uneconomical and require a great number of scarce piping for their realization. So far we have no sets of processes and installations capable of processing small amounts of oil gas with a high degree of efficiency. That is why the ministry will have to work not only for the increase of the gross output and for increasing the oil gas utilization factor, but also for a considerable improvement of the processes connected with the collection and transportation of the oil gas.

Drilling: The Key Sector

As far as the drilling work is concerned, the turbine method developed faster than others during the seven-year-plan period. New promising drilling techniques were elaborated and tested under industrial conditions. The oilmen of Tataria achieved great successes in the organization of drilling work. For instance, they managed, in a short span of time, to complete drilling work on the unique Romashkinskoye deposit and to increase the Republic's yearly oil output to 76 million tons. This experience should be used and carried over to other parts of the country, Siberia and Mangyshlak peninsula in the first place.

We shall continue to work on the further perfection of turbine drilling. Much depends here, however, on the Ministry of Chemical and Oil Machine Building of the USSR. For instance, the urgent task is to speed up the building of highly productive drilling pumps meant for prolonged operation under the pressure of 200-250 atm.

Drilling with the use of gaseous agents is among the most promising new methods. The mechanical speed of drilling increases 2-6 times as compared with the existing methods; the drifting per bit, up to 20 times; and the cost of each metre of drifting drops to a half.

The high effectiveness of the new method was confirmed by the recent experimental drilling of two deep wells at Dolinskoe oilfield of the Prikarpatburneft trust. This method can be successfully used in the the Kuban, Stavropol Region and Volga Region, the Western Ukraine, Central Asia and other parts of the country where the water influx into the well does not exceed 120-160 litres a minute.

The speed and cost of deep boring largely depend on the design and quality of the bits. A definite change for the better has taken place in this direction of late. The pin-type three-roller bits were used on a broad scale in drifting through hard rock. Monitored roller bits are being introduced--155,000 of them will be put out this year.

The first diamond bits appeared in 1961. Now they are being used on a broad scale for deep boring. Increased output of such bits would be welcomed at the oilfields.

Bits of serveral other new designs have been developed and put to use. Oilmen hope that machine builders will expand the production of high quality drilling gear of all types and sizes.

We hope that the Ministry of Chemical and Oil Machine Building of the USSR will accelerate the development of new types of drilling equipment.

Metallurgists are called upon to produce large amounts of highly-strong drilling and casing pipes with air-tight threaded joints and also heat treated and balanced heavy drilling pipes with wear-resistant threaded joints.

The work connected with the washing of the boreholes is among the most important parts of the entire drilling complex. Here oilmen are in bad need of the assistance on the part of the chemical, wood chemical, light, non-ferrous metallurgy, machine building and other industries.

The Decisive Factor

The change over to a new system of planning and economic stimulation in the spirit of the decisions of the September Plenary Meeting of the CPSU Central Committee is a decisive factor of the further upsurge of the oil extracting industry. As the first step, the ministry has decided to introduce the new system in several associations and oil industry administrations at the beginning of 1966.

Measures for the change over of the entire branch to the new system will be worked out on the basis of the experience gained by the first enterprises.

Having completed the seven-year period successfully, Soviet oilmen are determined to make new progress in the development of the oil extracting industry. They are getting ready for speeding up the rates of oil extraction in the very first year of the coming five-year-plan period

The author of this article was
V. Shashin, Minister of Oil
Extracting Industry of the USSR

Ekonomicheskaya Gazeta
No. 47 1965
(Abridged)

REPRINTED FROM DAILY REVIEW
OF SOVIET PRESS, MOSCOW

The Zhdanov Mining - Concentrating Combine

The town Zapolyarnyy and the Zhdanov mining-concentrating combine are located far beyond the Arctic Circle in the Murmansk Oblast'. News was received recently from the Pechenganikel'stroy trust that the first phase of the combine was in operation.

Construction workers are now working on a three shift basis and expect to complete the second and third phases of the combine by December.

Sovetskaya Rossiya
1 December 1965
Page 1 (Extract)

New Equipment at Kondopoga Combine

A new paper manufacturing machine has been installed about two months ago at the Kondopoga Combine. According to specifications, this machine (No.7) is capble of producing 108,000 tons per year at a speed of 750 metres per minute. At the present time it is being operated at a speed of 670 metres per minute.

Sovetskaya Rossiya
1 December 1965
Page 1 (Extracts)

Soviet Gas Industry

The Soviet gas industry was created in the past several years. It began to grow especially rapidly after 1958, when the Soviet Government adopted a decision on basic trends of its development under the seven year plan.

In 1940 the country produced only 3,200 million cubic metres of gas, in 1958 30,000 million and in 1965 about 130,000 million.

The first steps of the Soviet gas industry were extremely difficult. The Patriotic War was still going on when the Soviet Government adopted a decision to build the first big gas main in the country between Saratov and Moscow, stretching for 800 kilometres. At that time our specialists had no experience in building such complicated projects. But nevertheless Moscow received gas from the Volga banks already in the first postwar yar of 1946. At that time the supply to Moscow of one million cubic metres of gas a day was was considered a success, while now more than 40 million cubic metes are supplied to the capital in winter time. Today Moscow receives gas not only from Saratov, but also from the Ukraine and North Caucasus. It accounts for 70 per-cent of the city's fuel balance.

It is a well known fact that gas is more economical than coal, kerosene and wood. In Moscow, for instance, it is 76.8 per cent cheaper than Donets coal. This alone saves more than 40 million roubles a year to the working people.

This Saratov-Moscow gas pipeline was followed by others: from the Carpathian Mountains to Kiev and Moscow, from the North Caucasus and the Eastern Ukraine to Donbas, Moscow and Leningrad, from the Western Ukraine to Byelorussia and the Baltic Republics. Today the total length of gas mains in the USSR is 45,000 kilometres, almost one and a half times longer than in 1958. In the next five years it is planned to lay another 40,000 odd kilometres of gas pipelines.

The gas conduit between Bukhara and the Urals is the longest one in the world. The total length of its two threads exceeds 4,500 kilometres. They start in the burning desert of Uzbetkistan, in the area of Gazli, which means "there is gas" in Russian. But before they found this unique deposit where gas reserves are estimated at about 500,000 million cubic metres, geologists and drillers had to overcome tremendous difficulties. They worked in the almost 70° heat, suffered from thirst, and risking their lives subdued the fire of the burning well.

Today Gazli is a big well-apponted township. Water supplied from the Amu-Darya along a 160-km pipeline has given life to this spot in the desert.

The Gazli gas main has stretched to Chelyabinsk, Magnitogorsk, Sverdlovsk and Nizhni Tagil, crossing the Kyzyl-Kum and Kara-Kum deserts and the stony Ustyurt pleateau. In the next four or five months the whole system of the Bukhara-Urals gas pipelines will come into operation. More than 20,000 million cubic metres of gas a year will pass through it. From the point of view of a heat effect this will equal the amount of electricity produced by three Bratsk Hydroelectric Power Stations.

The builders are now again returning to the desert, this time to build the world's greatest gas pipeline system which will supply gas from Soviet Central Asia to central regions and will stretch for more than 6,000 kilometres. In two or three years gas will go from the recently found deposits of Uzbetkista, Turkmenia and Western Kazakhstan to industrial centres of the USSR and further to the West. The Central Asia--Centre gas pipeline will be included into a single network of the gas mains of the European part of the country.

The dauntless prospectors discovered rich deposits of gas in the north of Tyumen Region, in the harsh Arctic, far from the hot deserts. These new deposits are the "Gubkinskoye," which is located in the taiga not far from the settlement of Tarko-Sale, the "New Port" deposit on the Yamal Peninsula and the "Polyarnoye," south of the formerly discovered "Tazovskoye" deposit. As many as 26 gas-bearing regions have been found in Western Siberia alone in the past years. Already this year the Siberian main will reach the North Urals and will joins the Bukhara-Urals system.

In the past years Soviet geologists have found more than 430 gas deposits. The so-called perspective reserves of gas in the USSR equal 60,000,000,000,000 cubic metres, twice as much as in the USA.

This only the beginning of the huge work we shall have to do in the next five-year period. Thousands of geological groups have already started prospecting for gas in Western and Eastern Siberia, Yakutia and Sakhalin. They use the latest achievements in nuclear physics, nuclear dynamics and geophysics.

Gas mains are now built of tubes of 1,020 mm in diameter, the widest ones in the world. They can pass 23 times more gas than 325 mm tubes. At the same time the expenditure of metal in building a gas main is reduced by 85.7 per cent. In the near future we shall use tubes of 1,220 and 1,420 mm in diameter.

Work on supplying gas to industrial and rural enterprises, workers' and collective farmers' houses will soon be conducted on an accelerated rate. Today 8,500,000 flats in the USSR have gas and in 1970 the number will grow to 23-25 million.

To ensure a reliable gas supply a wide network of underground gas reservoirs were built in the country. In summer when less fuel is required, compressors pump million of cubic metres of gas into water-bearing layers. In winter gas from underground reservoirs goes to towns. These, so to say, artificial gas deposits exist near Moscow, Leningrad, Tashkent, Kiev and other cities. Moscow, for example, receives 25 per cent of the gas it used in winter from its underground reservoirs.

The use of gas in the national economy saved 7,000 million roubles only in the past seven years. This is twice as many as all capital investments in the gas industry. The share of gas an oil in the fuel-power balance of the country was 52 per cent in 1965.

The September Plenary Meeting of the CPSU Central Committee adopted very important decisions to improve industrial management, to perfect planning and increase economic stimulus. This opens wide opportunities for creative labour also of workers of the gas industry. The recently formed Ministry of the Gas Industry will excercise guidance of all branches, beginning with designing and research and ending with building and exploitation of enterprises producing gas and its transportation, and will secure the most efficient use of gas in the national economy.

By the end of the next five-year plan, 1970, it is planned to produce 240,000 million cubic metres of gas. This requires more intensive prospecting, more perfect exploration machinery and the wider network of gas mains.

The author of this article
was Yuli Boxerman,
Deputy Minister of the Soviet
Gas Industry

Daily Review of Izvestiya
Press. Moscow Vol xl, No. 46
(261)
2 December 1965

REPRINTED FROM DAILY REVIEW
OF SOVIET PRESS, MOSCOW

The Gasline Taas - Tumus - Yakutsk - Bestyakh

The route of this northern gasline stretches over a distance of nearly 400 kilometres. It crosses areas which cannot be travelled by either tracked tractors or cross country vehicles. Helicopters were used to airlift teams for wood clearing work along the route.

From the estuary of the Vilyuy where large reserves of gas have been discovered the pipeline has been installed above ground and follows a zig-zag course with elbows every 150 metres. This system compensates for temperature flunctuations.

To the north of Yakutsk the pipeline follows a straight course and is buried. Pipes made of special steel are used in this area.

The pipeline will be in operation in a year.

Trud
2 December 1965
Page 2 (Slightly abridged)

Reduction of Wastage in the Non-Ferrous Metallurgy

Our country occupies one of the leading positions among world producers of basic non-ferrous metals and our output is growing from year to year. Should the present situation in respect of the non-ferrous metallurgy be assessed solely on the basis of output and yearly increments, the results would present a very encouraging picture. However, an investigation to determine whether the production is paying for itself would reveal some very disturbing factors. The major fault may be found in the principle that "the plan must be met at any price".

Due to inefficient technological methods in ore treatment, the state incurs colossal losses. One example will be sufficient to demonstrate this fact. Copper ores of the Urals contain about 15 elements including sulpher iron, zinc, rare and precious metals. The copper contained in the ore costs about 20% of the toal value of all other elements. The present practice is to recover only copper, gold, silver, zinc and sulphur and not very efficiently at that. As a generalization, it may be said that non-ferrous enterprises of the Urals exploit but one quarter of the valuables contained in this ore. The remaining three quarters of the usable elements are not recovered and are lost in the waste.

These losses are due to inefficiency in the ore concentrating technology. Besides the elements that are not recovered at all, those that are, such as silver, gold and rare metals are only partially extracted during the initial processing hence large amounts disappear in the waste. The same happens again at smelting plants where the ore is usually smelted in reverberating furnaces. This is an outdated and unproductive method which does not ensure the full recovery of valuable materials. Consequently large amounts of iron, copper, zinc, lead and scattered elements are thrown out with the slag. The following figure may serve to illustrate the savings that would be made if better methods were used. A 0.01% decrease in the nickel content of the slag thrown out as waste by only two combines would allow to produce over 2000 additional tons of the precious metals per year.

Heaps of this slag keep accumulating in the vicinity of various enterprises of the non-ferrus metallurgy. This in fact represents millions of tons of raw material which could yield large amounts of various metals if reprocessed.

In the remainder of the article, the authors Professor S. Vanyukov and I. Plaksin, Members of the Acadamy of Science USSR, present various ideas to remedy the shortcomings now prevailing in the field of non-ferrous metallurgy.

Izvestiya
4 December 1965
Page 3 (Abridged)

The Amguema Power Station

A bridge has been built over the river Amguema. This opened a year round route from Zaliv Kresta to the Iul'tin combine.

The first hydro-power station in the Chukotka to be built on the river Amguema will provide electricity to Kolkozes, new construction projects and gold mining enterprises.

The expedition of the East-Siberian branch of the Institute Gidroproyekt has arrived from Krasnoyarsk. Members of the Sibgidroproyekt have started their work at the site of the future power station.

Trud
10 December 1965
Page 4 (Full text)

National Okrugs

National Okrugs were established thirty years ago in the peripheral areas of the Soviet Union. There are six such Okrugs in the North:

Koryaksiy
Taymyrskiy (Dolgano-Nenetskiy)
Chukotskiy
Khanty-Mansiyskiy
Evenkiyskiy
Yamalo-Nenetskiy

The Yamal represents a region of abouding natural resources and great promise. The Yamalo-Nenetskiy National Okrug contains one fifth of all reindeer herds in the country. In the past few years, gas reserves have been discovered which are estimated in trillion of cubic metres. The Seven Year Plan has been successfully concluded in the Okrug. Instead of the estimated 107,000 reindeers, Kolkhoz herds will number 130,000 animals by the end of December.

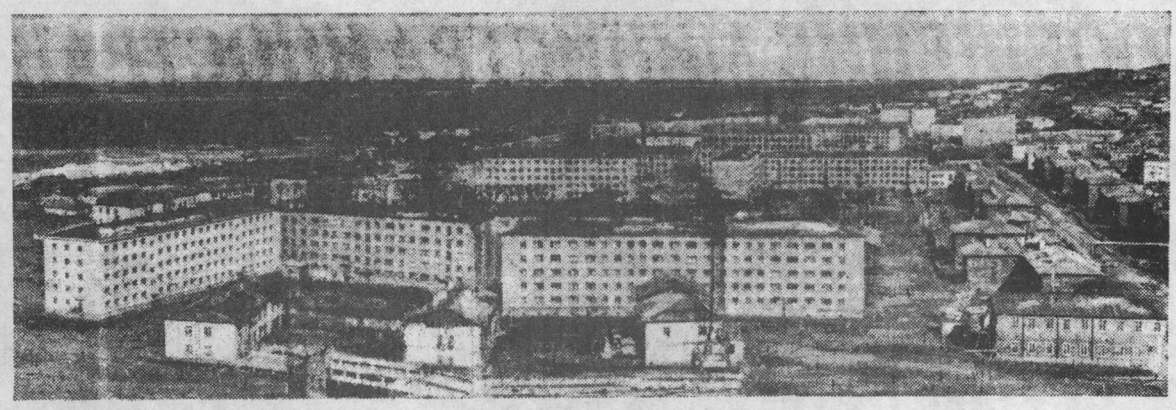

View of Dudinka

Previously, the inhabitants of the Khanty-Mansiysk National Okrug used only reindeer and dogs as means of transportation. Today Khanty-Mansiysk is linked by steamship lines with Tyumen', Omsk and Salekhard. Jet aircraft land at Surgut and Berezovo.

Sovetskaya Rossiya
10 December 1965
Page 4 (Extracts)

Mirnyy - The Diamond Centre

Seven years ago the present site of Mirnyy was but a collection of tents in the middle of the desolate taiga. At that time only one experimental concentrating plant was in operation. Today, this is a town of 20,000 inhabitants. Mirnyy is expanding. By the end of 1965 new living quarters will be availabe to a total worth of 4.5 million roubles.

The third concentrating plant is nearing completion. Mirnyy has a technical school known as the Vilyuy Energostroitel'nyy Tekhnicum. Four years ago this school could accommodate only 60 students. Today there are 350 students. This school has a branch in Chernyshevsk, where a power station is now under construction.

Stroitel'naya Gazeta
24 December 1965
(Ectracts)

Geologists Discover New Treasures

Nine new gas and oil fields have been discovered in the Tyumen' Oblast' in 1965. The most promising areas are

(a) Purpeyskoye (Gubkinskoye)

(b) Novoportovskoye

(c) Severo - Kazymskoye

The gas bearing strata are located at depths varying from 700 to 2200 metres.

The largest site of ore gold in the USSR has been discovered at Muruntau (Uzbekistan). Very promising placer deposits have been discovered in the north of the Yakut ASSR.

Ekonomicheskaya Gazeta
No. 52, December 1965
Page 19 (Extracts)

From an Economic Point of View

Despite the fact that the seven year plan has been completed a year ahead of time, that production of commercial goods has doubled, that output of wolfram has increased five-fold, that extraction of tin has grown by nearly two times, and that gold production is up by 82%, it is still felt that production could have been even higher if there had not been serious shortcomings in the direction of economic enterprises and if certain aspects of subjectivism and voluntarism were not present. Poor administrative planning, combined with inefficiency in delivery etc. has resulted in innumerable amendments to plans. This inefficiency has caused a flood of complaints from Regional Secretaries, Directors of Mining Concerns, and from mining sites.

The economic reform under way at the present time is reviewing the whole matter of economic independence for interprises. An example of this is banking control. This system has sometimes put the better enterprises in an unfavorable position and has gone so far as to refuse to release money for payment of wages. This has led to the paradoxical situation where enterprises are required to increase their output but at the same time they are allowed less money for payment of earnings. This injustice is completely eliminated by the new instructions. The Director will now disburse funds throughout the year in the way in which he considers to best suit the interests of the enterprise.

Another vexing problem is that of planning the size of worker and office staffs. Up to now the regulations did not encourage economy in the labor force in the Far North. Heads of enterprises have now been given the right to independently determine the size of their work force and prepare their own estimates of administrative management expenditures. This will make it possible to free a considerable part of the work and office staff for employment in other branches of the economy in the North-East, and at the same time effect a saving in the enormous sums spent out of State funds for transportation of workers.

The new methods will infinitely greatly increase the role played by profit, which is the most synthetic index of work productivity. The funds available at enterprises will now be dependent on the amount of profit. It is thought that the new approach to management will effect great savings in the Far North, particularly in such areas as transportation of goods, since transportation costs often come to much more than the value of the goods themselves. It is pointed out that getting the workers interested in economic utilization of delivered goods will result in the saving of huge sums.

Another task of primary importance is raising the effectiveness of utilization of the main production funds. Up to the present time enterprise Heads and the engineer-technical staff have not been particularly interested in this aspect; payment of a premium was conditioned by so many indices that it was almost impossible to receive it. In the past three years only one of the Magadan enterprises received a premium payment. One of the others were able to once achieve this right, even though the results of their work were quite good.

Under the conditions in the Magadan Oblast, where a whole series of cost-raising factors are in operation, an exceptionally important problem is the condition of incentive funds at enterprises operating at a loss. Up to the present time these incentives have been relatively ineffective.

The growth of cost accounting assumes that all commercial enterprises will operate at a profit. The size of the profit and the amount of incentive payments must be determined exclusively by the quantity and quality of the labor of that collective. It is pointed out, however, that in the Far North and North-East there are a whole series of factors for which the collective cannot be held responsible. In particular these are the factors of transportation difficulties, seasonal work etc. Northern conditions place a heavy burden on the cost of the product. This will be particularly clearly seen under conditions of cost accounting. The only way out of the situation is in further technical progress and increasing the degree of mechanization of all mining operation. The most important problem in this connection will be the development of energy in the Oblast'.

Development of energy resources will permit exploitation of new deposits, to extend existing operations and provide the country with more gold for less expenditure of labor. Estimates show that new hydroelectric power stations pay for themselve in two or three years and the cost of gold goes down by several-fold.

The transition to the new system has raised the requirement for qualified specialists. The business can no longer be successfully run by the person who has grown accustomed to act in response to decree from above. The growing role of economic methods in industry and the expended rights of enterprises requires an immeasurably deeper knowledge of economics on the part of the practical workers, as well as strictly scientific approach to production control. One of the first steps in solving this problem must be training of directors-economists, their learning the basics of Marxist-Leninist economic science, and the laws governing the development of socialistic economics.

Economicheskaya Gazeta
December 1965
Page 10 (Summarized)

TRANSIATED BY THE DEPARTMENT OF THE SECRETARY OF STATE, BUREAU FOR TRANSLATIONS, FOREIGN LANGUAGE DIVISION.

PIPELINES

The Pipeline Shaim-Tyumen' in Operation

Construction workers have completed the pipeline Shaim-Tyumen' which stretches over a distance of 410 kilometres. They have overcome many obstacles including 38 rivers and a 100 kilometre stretch of marchland. Welding work was finished in the first half of December and oil was pumped along this underground pipeline. The terminal point of the pipeline is at the station Voinovka near the city of Tyumen'.

Gudok
22 December 1965
Page 1 (slightly abridged)

Oil Shipments from Tyumen'

As we have announced earlier, oil is now flowing along the new pipeline linking the oilfields of West Siberia with the city of Tyumen'. On 25 December an oil loaded train was despatched to Ryazan' oil refinery.

Gudok
28 December 1965
Page 1 (Extract)

TRANSPORT AIR

Dirigible Will Fly Again

Television towers are difficult and costly to erect. Certain engineers have advanced the idea of using dirigibles as antenna carriers. Anchored balloons could serve the same purpose being capable of rising to altitudes up to 2.5 kilometres. The use of such systems would extend the reception of television programmes to the most distant corners of the country.

It is to early yet to predict the reliability of these systems. This and other ideas were formulated at the design bureau for dirigible construction in Nizhniy Tagil.

The personnel of the above organization have been awarded actual contracts for the design of dirigibles for various commercial uses.

The Konda timber concern (lespromkhoz) in the Tyumen Oblast has a yearly logging project of about one million cubic metres. The logs are moved in rafts to the pont of destination 1930 kilometres away. A dirigible would reduce this distance to 200 kilometres and the timber delivered by air would be cheaper.

Recently the design group headed by engineer D. Bimbat has completed the plans for a dirigible to be used by Tyumen oilmen.

The first training establishment for airship personnel has been set up. Courses are available for pilots, navigators, wireless operators, flight engineers etc.

Izvestiya
2 December 1965
Page 6 (Abridged)

Air Services for 1966

New air terminal buildings will be in service in 1966 at Ufa, Zaporozh'ye, Leninabad, Perm', Magnitogorsk, Barnaul and Novokuznetsk. New hotels are being planned in many cities of the USSR.

Fifty new air routes will be opened in 1966. The turbo-prop IL-18 aircraft will provide regular services on the routes:

Baku	-	Lvov
Archangel	-	Odessa
Leningrad	-	Frunze
Tashkent	-	Riga
Dushambe	-	Kiev

The AN-10 aircraft will be used on the routes:

Minsk	-	Kiev

Orenburg	-	Sochi
Syktyvkar	-	Sverdlovsk
Orenburg	-	Perm'

The TU-124 aircraft will link the cities of:

Ulyanovsk	-	Mineval'nyye Vody
Sukhumi	-	Volgograd

The AN-24 aircraft will be used to service local routes in the Far East, West-Siberia, Kazakhstan, Povolzh'ye, Turkmenia and Baltic area.

Trud
29 December 1965
Page 1 (Full text)

TRANSPORT RAIL

The Railway System Extends to the North

Transport workers have many achievements to their credit in this last year of the Seven Year Plan. Nearly 1600 kilometres of new lines are presently being completed in various parts of the country. These include the following lines:

(a) The Abakan-Tayshet

(b) The Kzyl-Tu-Irtyshskoye Karaganda-Karagaylinskiy Mine.

(c) A major portion of the line Ivdel'-Ob'.

Work is progressing on the lines Gur'yev-Astrakhan', Archangel-Leshukonskoye, Mikun'-Koslan, Zvezdo-Pugachevsk etc..

The correspondent of this newspaper interviewed V.T. Shvets, Minister of Transport construction USSR on the subject of future railway construction.

While work was still in progress along the mainline Abakan - Tayshet, helicopters and cross country vehicles of the institute Sibgiprotrans appeared in the area between the rivers Ob' and Irtysh. Of the many possible routes in the undeveloped region of the West Siberian Plain, the best was deemed to be that from Tyumen to Surgut via Tobol'sk.

The total length of this line will be about 700 kilometres.

Stroitel'naya Gazeta
1 December 1965
Page 1 (Extracts)

Results Achieved by Murmansk Railway Workers

The personnel of the Murmansk section of the October Railway have fulfilled the Seven Year Plan or 29 November. The following results were noted:

(a) The freight turn-over has increased by 93%.

(b) The despatch of freight has increased 22 times.

(c) Passenger traffic has increased by 47%.

(d) The average weight of a freight train has increased by 65%.

(e) Labour productivity has increased by 65.7%.

(f) Salaries of railway workers have risen by 49.7%.

Gudok
2 December 1965
Page 1 (Full text)

The Snow Clearing Device "Vikhr'"

An unusual show blower was placed into operation along the railway line Dudinka-Noril'sk. The equipment assembled by engineers V. Petinskiy and B. Bozhov consists of an aircraft jet engine mounted on a flat car. The engine may be rotated and given the necessary inclination towards the ground. The equipment is capable of removing any amounts of snow from the line.

Trud
2 December 1965
Page 2 (Full text)

Laying New Railways

The northern forest field is the name of a vast area which spreads through the river basins Vychegda, Pechora and Mesen. Its main wealth is forest. To bring the massive green virgin-land with more than a billion cubic metres of timber reserves within reach a railway is being built from Arkhangelsk to Leshukonskoye. Work has been started on the section Arkhangelsk Karpogory. It is planned to lay the railroad to the district centre of Leshukonskoye, then farhter along the latitude line Mikun-Koslan-Syktyvkar and join it to the Phosphoritnaya-Yar branch track of the Gorky main line.

The projected road more than 800 km long will help push the timber industry.

Extensive projects will be launched in Siberia and the Trans-Baikal area. The Siberian Transport Project Institute is confronted with a big problem now. It is about to complete the design study for the construction of the road Tyumen-Surgut which will lead up to the petroleum deposits of the West Siberian lowland. Its task is also to survey routes of railroad approaches to the construction site of the future Yenisei hydroelectric power station, and also to the Udokansk copper deposit near Chara, north-east of Lake Baikal. Simultaneously, the routes of railroad approaches to the Boguchansk hydroelectric power plant on the Angara river will be surveyed

A few more lines will appear on the map of the country. One will interconnect Beineu and Kungrad. It will be the final link of the second railway which will connect the central regions of the Russian Federation and the Caucasus with the republics of Central Asia via the Astrakhan-Guriev line now under construction. An expedition of the Moscow Transport Design Institute has already completed the design study. Full-scale operations to build the earth bed and to lay the rails will be launched along the route in the near future. The Moscow Institute will also carry out survey to enhance the carrying capacity of the Guriev-Kandagach line and will prepare working blueprints for the Divnoye-Elista railroad builers.

The project of the Yavan-Termez railroad opens access to the mineral wealth of Southern Tajikistan and its hydroengineering resources will be finished in 1966.

A new outlet to the Black Sea coast will be the railway line Krasnodar-Tuapse. It will greatly cut the travel from Rostov-on-Don to the Sochi resorts, and to Tbilisi, capital of Georgia. The straight road Akstafa-Razdan will expand the transport connections of the Transcaucasian republics. In 1967-1968, the links will be extended further to the east. The Tomsk Transport Design Institute and Trans-Siberian Electrical Design Institute will draw up the project for the electrification of the railway line Sludyanka-Petrovsky Zavod-Karymskaya. This will give the green light to electric locomotives on nearly 1,000 km section of the Trans-Siberian Railway. The surveyors of the Chief Transport Design Institute will also prepare design data for the electrification of a number of other routes with a total length of 4,000 km.

The first year of the five-year plan period will see a new step forward in the development of railway engineering and network in the USSR.

The author of this article was
A. Skorobogatov

Gudok
14 December 1965
(Abridged)

REPRINTED FROM DAILY REVIEW
OF SOVIET PRESS, MOSCOW

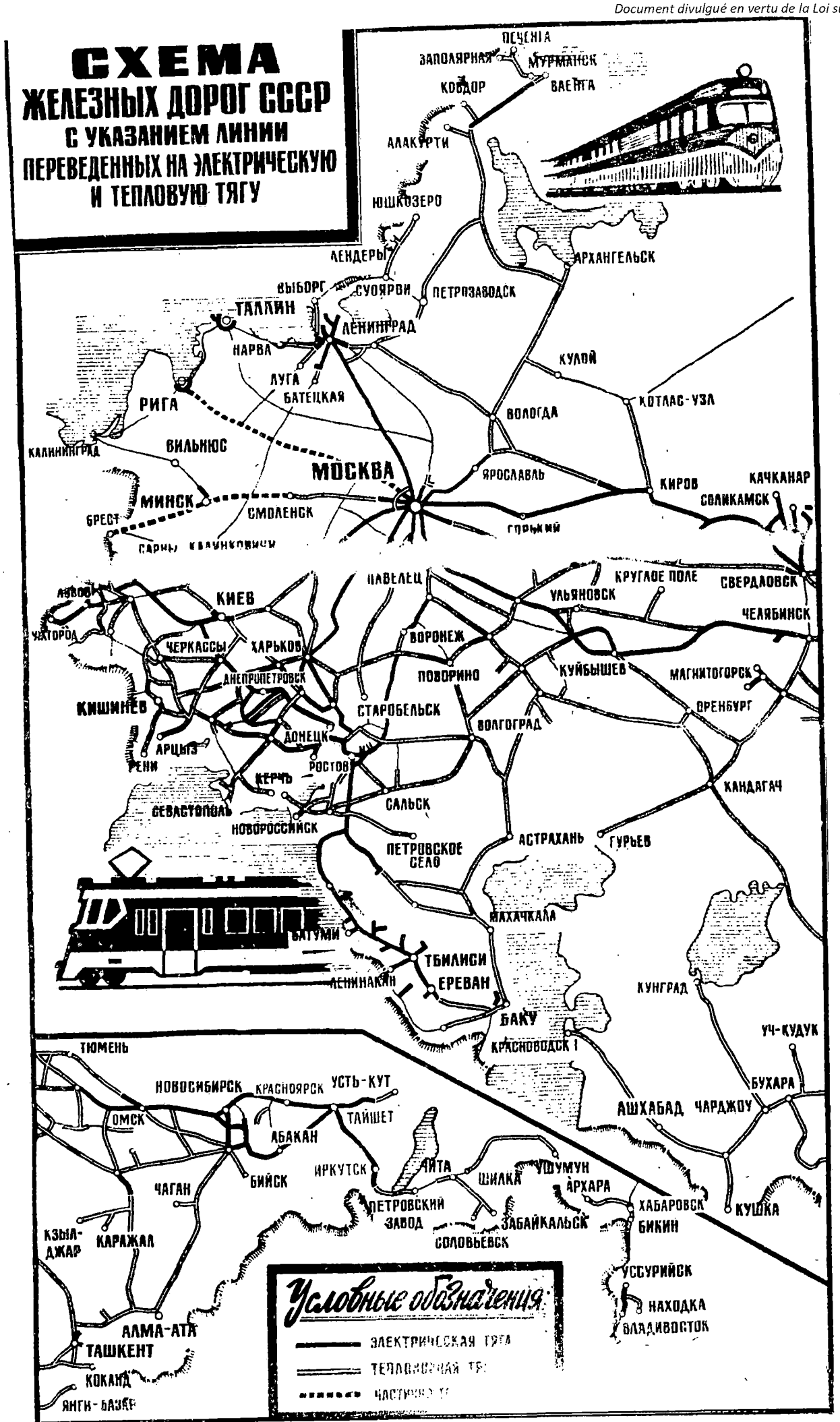

Ekonomicheskaya Gazeta
No. 50
December 1956
Page 1

Electrified lines
Diesel train
Partial diesel operations

TRANSPORT ROAD

Amphibious Vehicle for Mail Services

A AN-12 freight aircraft delivered an amphibious aero-sledge from Moscow to Khantanga. This new equipment for the north will bring considerable improvements in mail services as up till now only dogs or reindeer were used for deliveries to isolated localities.

Trud
12 December 1965
Page 4 (Abridged)

New Vehicles for the Extreme North

The Likhachev Automobile Plant has produced a modiefied model of the ZIL-130S which is specially adapted for operations in the Extreme North. All windows have been provided with thermo-pane glass which is frost-proof and does not fog. The engine is equipped with a pre-heater of 14,000 kilo-calories.

The vehicle has an extra fuel tank, a spot-light for illuminating road shoulders and special fog headlights. Emergency tools include an axe, a saw and a shovel. The driver compartment upholstry and all the parts that normally would be effected by low temperatures have been made of special materials.

The modified model of the ZIL-130S will serve as a prime-mover for towing all types of semi-trailers in Arctic condtions.

The first ZIL-130S vehicles will be despatched to Yakutiya for user trials.

Trud
15 December 1965
Page 1 (Full text)

TRANSPORT WATER

Last Vessel to Leave Archangel

The Finnish vessel Verna Paulin loaded with timber was the last foreign vessel to leave Archangel. During the 1965 shipping season a total of about 2000 vessels called at Archangel. Of this number 600 were of foreign registry.

Sovetskaya Rossiya
2 December 1965
Page 1 (Full text)

Ice-Breaker Operations in the North

The shipping season has recently been closed along the Northern Sea Route. Ice-breakers have returned to their home ports. After a short respite they were sent back to duty.

An early cold spell in the White Sea and the Baltic caused the appearance of ice at the approached to Leningrad and Archangel. Ice-breakers and powerful sea tugs were called in.

The south-eastern part of the Severo-Dvinsk Bay and the waters of the Archangel port are now ice-bound. The following vessels are now engaged in channel clearing work in this area:

(a) Ice-breaker No. 1

(b) Ice-breaker type life-boat Triton

(c) Seatugs: Buran, Vikhr', Purga and Nord.

These will be joined by the ice-breaker Kapitan Belousov from Murmansk.

Vodnyy Transport
4 December 1965
Page 1 (Extract)

A New Vessel for Northern Operations

The Soviet ice-breaker fleet has acquired a new vessel. The ice-breaker Kiev, built at the Vyrtsilya dockyards in Finland has been officially handed over to the Soviet Union.

This new vessel which is identical in every respect to the ice-breakers Moskva and Leningrad which were also built in Finland, will first be used in the Baltic. Apart from the atomic ice-breaker Lenin, the three ice-breakers built in Finland are the most powerful vessels of their kind in the world.

Vodnyy Transport
9 December 1965
Page 4 (Full text)

Sea Transportation Statistics - November 1965

The November freight transportation plan for the shipping Agencies of the Ministry of the Sea Fleet (Coastal and Overseas) shows the following results in percentages:

Shipping Agency	Coastal Service			Revenue from overseas Transportation
	Total in tons	Including Transport fleet	Total in ton/miles	
Northern	133	162	160	102
Baltic	94	94	75	104
Black Sea	105	105	115	100
Caspian	102	101	106	88
Far Eastern	77	72	80	101
Danube	70	70	68	55
Results for the Ministry of the Sea Fleet:	97	95	95	99
Including:				
Dry Freight	96	91	97	
Liquids	98	99	93	
In Addition:				
Middle Eastern General Cargo	124	124	112	

Vodnyy Transport
18 December 1965

JIB/CAN FOLDER

RESTRICTED

Copy No 75

JIB(CAN) JIB(CAN) 3/66

DATE 18 February 1966

JOINT INTELLIGENCE BUREAU
Ottawa

Estimated Wheat Supply and Utilization

in the USSR 1962 and 1970

JOINT INTELLIGENCE BUREAU

Department of National Defence

OTTAWA, CANADA

DISTRIBUTION

External Affairs	1 - 6	FORD via JIB(O)LO(L)	28
(Defence Liaison (2) Division: 2)		JIB(A)	29
(Economic Division: 2)		CIA	30 - 44
(European Division: 1)		INR, State Department	45 - 46
(Embassy Moscow: 1)		DIA(via DGI)	47 - 66
Finance	7	Sec/EIC	67
Trade & Commerce	8 - 10	JIB(O)LO(L)	68
Bank of Canada	11	JIB(O)LO(L) for Dr. Klatt, Foreign Office	69
Agriculture	12	JIB(O)LO(W)	70 - 73
DRS	13	JIB(O)	74
DGI	14 - 20	File	75
DGI for DSTI	21	Spares	76 - 79
CBNRC (Library)	22		
DIS via JIB(O)LO(L)	23 - 27		

RESTRICTED

ESTIMATED WHEAT SUPPLY AND UTILIZATION IN THE USSR, 1962 AND 1970

Summary and Conclusions

1. The net domestic supply of wheat estimated to have been available to the USSR in 1962 was 65.5 million metric tons. This figure differs from officially estimated farm production of 70.8 million tons by an amount equal to the total tonnage of wheat exported since no imports were recorded and no stockpiling of wheat is taken to have occurred. (Paragraphs 1-10)

2. While human consumption of wheat is believed to have absorbed slightly more than 30 million tons or close to one half of net domestic supply, animal feed needs are estimated to have taken just under 14 million tons or about 20 per cent of net domestic supply and seed needs 11-12 million tons or 15-20 per cent of net domestic supply. Between 5 and 6 million tons or some 8-10 per cent of net domestic supply in 1962 could not be accounted for. (Paragraphs 11-36)

3. Farm production of wheat in the USSR by 1970 is estimated to rise slightly above output levels in 1962 on a marginally reduced wheat acreage. The small change in production estimated for 1970 is due in part to the fact that the output level in 1962 was somewhat larger than the 1958-1962 average. It is believed that while wheat output will rise by 1970 by just over 1 million tons (37 million bushels) to 71.95 million tons (2.7 billion bushels) acreage will decline by 400,000 hectares (1 million acres) to 67 million hectares (166 million acres). (Paragraphs 37-53)

4. The decline in acreage, which will probably be confined to spring wheat areas, is expected to result from an increase in fallow land allowances

/rather than

.../2

rather than an outright removal of land from production. In spite of this estimated decline in acreage, a rise in production should result from improvement in supplies of inputs such as fertilizers and agricultural equipment. (Paragraphs 39-49)

5. Net domestic supply of wheat is estimated at 66.95 million tons for 1970, about 1.5 million tons above the 1962 level. (Paragraphs 54-57)

6. Human consumption of wheat will likely rise by 1970 but this will probably result from a rise in population rather than any increase in per capita levels of intake compared with 1962, since consumption per head in 1962 was relatively high. Requirements for human consumption have therefore been estimated to continue to absorb about half of net domestic supply or roughly 34 million tons. (Paragraphs 58-59)

7. Animal feed and seed needs are estimated to require 11-14 million tons each or 15-20 per cent of net domestic wheat supply in each case. Little change compared with 1962 is thus thought likely. (Paragraphs 60-61).

8. A residual of nearly 4 million tons of wheat remains for 1970 when final deductions from net domestic supply of about 4 million tons, for industrial needs and loss, are made. This surplus could be allocated to state grain reserves or used to supplement exports. In the event the entire residual were used to supplement the estimated level of exports for 1970, the resultant export total would be substantially above the 1962 level. (Paragraphs 62-65)

.../3

Introduction

9. Massive imports of wheat in 1963 and 1965 by the USSR (the leading world producer of this commodity) raise the question why internal supplies are inadequate. What is required in order to understand why a supply of wheat is not adequate for a country's purposes is detailed knowledge of how large its net supplies are and to what uses these quantities are being put. Since the Soviet Government does not publish complete details on supply and utilization of wheat it is necessary to compile estimates of any missing data before a comprehensible picture can emerge. The purpose of this paper is to make an attempt to set down for a previous period (1962) a possible wheat supply and disposition structure. In addition, the paper also formulates a likely series of estimates for a future period (1970) as a means of giving some sense of direction.

10. While an analysis of the Soviet position covering a longer period of time than single years would have been preferable, the difficulties of handling such a period and the likely length of such a study made the exercise appear unwarranted for the present.

11. A considerable body of literature is available on the subject of Soviet grain from western sources, but very little specifically on wheat. In dealing with the subject of grain production as a whole, western scholars and government agencies have argued that official Soviet production data should not be used since they are subject to a great deal of inflation at least in recent years. Inflation of actual data occurs, it is said, because of statistical ineptitude and high waste and loss factors. It is evident from official Soviet publications that the harvesting and storage of grain in the USSR is characterized by a degree of inefficiency that appears extraordinary by any measure. What is not evident from official Soviet sources however is the exact quantitative significance of this inefficiency in relation to production. This paper accepts official Soviet claims for farm production of wheat to begin with and tries to provide some explanation of why this figure is difficult to operate with. While the paper does not categorically state that Soviet claims for farm production of wheat are invalid, it cannot avoid implying a measure of invalidity.

12. The method of the paper is simply to try to balance a supply estimate with a series of uses typical to a wheat producing and consuming country. Where possible, Soviet data are used as in the case of the seed estimate. Where no official Soviet data are available, the paper relies on Canadian material and history. This is considered usable on the grounds that Canada is a major world wheat producer and thus has a considerable experience to offer and also that wheat in Canada is grown in areas within latitudes and a continental environment very similar to the wheat lands of the USSR.

.../4

PART 1

Estimated Wheat Supply in 1962

TABLE 1

Summary of Supply Estimates
(million metric tons)

Farm production	70.8
Net foreign trade	5.3
Gross domestic supply	65.5
Stockpiling	not accounted for
Net domestic supply	65.5

Farm Production

1. Farm production of wheat in 1962 was officially estimated to have been 70.8 million metric tons or 2.6 billion bushels.(1) This estimate was based on farm returns to the Central Statistical Bureau and relates to yields at the barn, determined in turn by bunker weight of the crop as registered on the combine at the time of harvesting. Barn yield in 1962 was 6.5 per cent higher than in the previous year, 42 per cent higher than in 1963 (a year marked by serious drought in major spring wheat areas) and 2 per cent above the five year average for 1958-1962.(2)

2. A total of 67.4 million hectares or 166.5 million acres of land was sown to wheat in 1962 of which 27 per cent was sown to winter wheat and the remainder to spring wheat. The area sown to all wheat in 1962 was 7 per cent greater than in the previous year and 5 per cent above the average for 1958-1962. As a proportion of all land sown to grain in 1962, wheat sown areas amounted to 50 per cent. In comparison with the area sown to all crops in 1962, the area sown to wheat represented 31 per cent. There was little difference (2 per cent or less) in these last two ratios compared with 1961 or with the averages for 1958-1962.

3. The yield per hectare of winter wheat in 1962 was 1680 kilograms or 25 bushels per acre, while the yield of spring wheat per hectare was 820 kilograms or 12.2 bushels per acre. Although this yield pattern was virtually unchanged compared with 1961, the winter wheat yield in 1962 was 5 per cent above the average for 1958-1962 while the spring wheat yield was 9 per cent lower than average.

.../5

(1) See Appendices for all footnotes.

4. While the weather conditions that prevailed in the course of the growing season for wheat in 1962 cannot be described as generally bad, they were poor in many areas and undoubtedly were a principal cause of the failure of spring wheat yields to regain 1958-1960 levels of 940-970 kilograms per hectare or 14-14.4 bushels per acre. Drought conditions in many of the grain producing regions east of the Volga River were the source of relatively low spring wheat yields while abnormally cool and wet weather in the northern half of the European region coupled with warm and dry conditions in the southern half of the same area tended to retard the development of winter wheat plants.

5. The thesis that weather played a major role in limiting the size of the 1962 wheat crop gains credence when official data on agricultural inventories of grain combines, tractors and trucks are studied. These latter show that stocks of each of these items of capital grew in 1962 at a higher rate than held for the previous year.(3) In particular, there was a 42 per cent increase in the numbers of self propelled grain combines.

Net Foreign Trade

6. Soviet exports of wheat and flour in wheat equivalent in 1962-1963 (July-June) amounted to 5.33 million metric tons or nearly 195 million bushels.(4) No wheat imports are recorded for this period and consequently net foreign trade was positive by the full amount of recorded exports. Exports of wheat in the 1962-1963 trade year were 5.5 per cent higher than the previous year while imports were zero in each case. This general situation changed abruptly in the course of the 1963-1964 crop year when, following harvest failures in key spring wheat areas, wheat and flour imports in wheat equivalent rose to nearly 9.3 million tons while exports dropped to about 1.3 million tons.

7. Ten countries each took 100,000 tons (3.5-4 million bushels) of wheat or more from the USSR in the 1962-1963 trade year. Among these, Bulgaria, Czechoslovakia, East Germany, Poland and Cuba took a total of 3.16 million tons or nearly 60 per cent of all Soviet wheat exports. The remaining five countries taking 100,000 tons or more were Finland, Britain, the Netherlands, West Germany and Brazil. These latter countries took a total of 1.486 million tons or nearly 28 per cent of all Soviet wheat exports.(5)

Gross Domestic Supply

8. With imports of wheat zero while exports amounted to 5.33 million tons, farm production of wheat must be reduced by the full amount of exports in order to derive the gross domestic supply of wheat in 1962. The latter is therefore estimated at 65.5 million tons.

Stockpiling

9. There is no official Soviet information available on the quantities of wheat which may have been added to or subtracted from reserves in 1962. Heavy

/Soviet purchases

.../6

Soviet purchases of wheat following the crop failure in eastern areas of the country in 1963 suggest that reserves of wheat at the beginning of 1963 were not large enough to compensate for low production in that year. This might mean either that wheat stocks were non-existent or tending to fall below some unknown level acceptable to the party and state as a minimal contingency reserve. To the extent that wheat production in 1962 was above the output claimed for 1961 and slightly above average for 1958-1962, there is a prima facie case for the point that wheat reserves were supplemented in 1962 out of current production although the exact quantity involved remains unknown.

Net Domestic Supply

10. Net domestic supply normally differs from gross domestic supply by a quantity equal to the amount added to or subtracted from reserves. For the present, it is assumed that reserves were neither added to nor depleted and that net domestic supply equalled gross domestic supply. Additional comment on the question of changes in reserves occurs in the discussion on utilization under the subsection on "industrial use and (stocks) not accounted for."

Estimated Wheat Utilization in 1962

TABLE 2

Summary of Utilization Estimates
(million metric tons)

Human consumption	30.3
Animal feed	13.8
Seed	11.5
Industrial use, waste, dockage and not accounted for	9.9
Total	65.5

Human Consumption

11. For many years the Soviet Government has not published statistics dealing with average per capita consumption of wheat flour and bread, and there is therefore no certain basis for such data relating to 1962. Since human

/consumption

.../7

consumption of foodstuffs made from wheat flour is by far the largest single item in a wheat utilization table, an estimate must be computed to fill the gap created by the lack of recent official data. The last period for which official Soviet statistics relating to per capita consumption of wheat flour and bread are available is that covering the years 1928/29 - 1929/30.

12. An attempt to interpret present consumption patterns on the basis of a model more than 30 years old would be thoroughly unrealistic in the case of any industrialized country in Western Europe, but is not nearly so in the case of the Soviet Union. This follows from the knowledge that the consumption patterns and levels of 1928/29 were altered drastically in a negative sense with the onset of full scale collectivization and industrialization after 1930 and were not recovered until after 1935. Recovery following this latter year was however undone by the outbreak of the Second World War and the requirements of the restoration period 1945-1950.

13. As a result of the intervention of a long period of privation brought about by the early years of planning, 1930-1935, and the ten year period of war and restoration, 1941-1950, the annual food consumption pattern and level of the Soviet population changed very little between the time for which wheat flour and bread intake levels are available (1928-1929) and the present.(6)

14. One further key point requires special consideration on the subject of the 1928/1929 figures. They relate to annual food consumption in workers' families (largely urban factory and service workers). While it is true that large numbers of the Soviet population cannot yet be included in the term "workers' families" the presence of a vastly greater urban population(7) and the permeation of rural ways of life by urban as a result of the considerable intrusion of city control over farm activities are taken to have produced a population whose habits are in general largely urban in character. It is therefore assumed that the intake of wheat flour and bread per capita of the whole Soviet population in 1962 was similar to that of workers' families in 1928/29.

15. According to data released in 1931 and pertaining to the previous period, the annual per capita consumption of wheat flour and bread in 1928/29 in workers' families was 93.1 kilos or 205 pounds.(8) This figure could have been applied without further adjustment to the present population of the USSR so as to produce current aggregate human consumption of wheat. However, official Soviet data on production of foodstuffs provides evidence that there has been a rise in the total daily caloric intake of the population in comparison with 1928, some of which is believed to apply to a higher wheat flour and bread intake.

16. While no official Soviet data are available on the subject of the 1962 daily per capita caloric intake, it is assumed that is was of the same order of magnitude as the figure of 2960 which applied to Yugoslavia for 1963.(9) The figure for Yugoslavia is believed relevant inasmuch as the ethnic, cultural and political foundations of Yugoslavia and the USSR are similar although income

/levels

.../8

levels are not, being higher in the USSR. Thus the Yugoslav figure is possibly too low as a measure of Soviet levels. If the level of daily caloric intake which applied to state workers in 1928/29 can be taken as a guide to the average level for the whole population at that time, then the increase between 1928 and 1962 would amount to about 25 per cent since the relevant level for 1928/29 was 2,338 calories.(10)

17. The proposition that there has been a rise in the per capita intake of wheat flour and bread is based on the knowledge that whereas the rise in wheat harvests between 1928 and 1962 has been just under threefold, the rise in population has been slightly less than 50 percent.(11)

18. In the absence of any certain means of establishing what proportion of the estimated rise in daily per capita caloric intake was contributed by wheat flour and bread alone, it has been assumed that the proportion is equal to the estimated rise in daily caloric intake for 1928/1962; that is, 25 per cent. Since the rise in daily per capita caloric intake under the assumptions given here must have amounted to 602 between 1928 and 1962, it would follow that the daily intake of wheat flour would rise from 255 to 299 grams.(12) On an annual basis the per capita consumption of wheat flour would therefore amount to 108.8 kilos.(13)

19. If the above per capita figure of 108.8 kilos is applied to the 1962 Soviet population of 223 million the result is that the total human consumption of wheat flour for 1962 may be estimated to be 24.26 million metric tons. If the coefficient of conversion of wheat flour into grain equivalent can be taken to be 1.25, then it may be estimated that a total of 30.3 million metric tons of wheat was required for direct human consumption in 1962.(14)

Animal Feed

20. Soviet agricultural statistics provide no data on the quantity of wheat fed to animals. Inasmuch as the wheat crop represents a large proportion of all grain produced annually in the USSR, and since the government has been encouraging the production of meat it would seem reasonable that some portion of annual domestic disappearance of wheat is to be accounted for by grain fed to animals.(15) To derive an estimate of how much wheat was fed to animals in 1962 in the USSR, Canadian grain-input - commodity-output ratios in wheat deficit areas in 1963 were applied to Soviet production in 1963 of meat, milk and eggs, etc.(16) This approach revealed that Soviet agriculture required 78.84 million tons of various grains for animal feeding. On the assumption that the total crops of corn (maize), barley, oats, millet, legumes, and one-third of rye output were fed to animals, giving a sum amounting to 65.06 million tons, a deficit of 13.8 million tons appears which could only have been covered by wheat consumption. A total of 13.8 million tons has therefore been accepted as the estimate for wheat consumed by animals. There is some evidence that the use of Canadian grain feed ratios overstates Soviet requirements and therefore the latter figure should be considered an upper limit.

.../9

Seed

21. The Soviet Government does not regularly publish annual wheat seed requirements. In September 1965, however, a government daily newspaper, commenting on the necessity for improved handling of seeds, noted that 8.5 million tons of wheat would be required for spring seeding in 1966.(17) On the assumption that the area to be seeded to spring wheat in 1966 will not exceed 50 million hectares, a seeding rate of 170,000 tons per million hectares can be derived from official Soviet sources for the current year. If winter and spring wheat seeding requirements are taken to be equal and unchanged in the past five years then the total quantity of wheat required for the 1962 crop must have been 11.5 million metric tons.

22. From the foregoing it appears that Soviet farms require considerably more wheat per acre for seeding than is the case anywhere in Canada. If the previous seeding requirements in the USSR are computed on a per acre basis, it appears that 151 pounds or 2.5 bushels of wheat are required. This figure is 25 per cent higher than the highest figure applying anywhere in Canada.(18) It is believed that the high rate applicable to the USSR reflects the poor germinating quality of Soviet seed, in turn a function of poor handling, cleaning, drying and storage procedures. A recent article in a Soviet daily paper maintains the validity of this argument.(19)

Industrial Use, Waste, Dockage and Not Accounted For

23. This category covers a series of quantities which are either particularly difficult, or impossible to account for. In total, the amount of wheat that remains to be accounted for is simply the difference between the sum of requirements for human, animal and seed purposes, and net domestic supply. The difference or residual is 9.9 million tons.

24. A Soviet source has indicated that 3-4 per cent of total Soviet grain crops might in recent years have been acquired by industry on an annual basis for the manufacture of various products.(20) Canadian experience shows that the most likely uses for this grain would be the production of alcohol, starch, adhesives, miscellaneous chemicals, explosives and pulp and paper products. No official Soviet information is available on what quantities of wheat are involved in these manufacturing processes. Since wheat made up 50 per cent of all Soviet grain output in 1962 and was therefore a substantial portion of total grain supply, a guess may be made that wheat supplied one-half of industrial grain requirements. This would mean that industry absorbed about 2.5 million tons of wheat in 1962.

25. If the amount of wheat taken to be utilized by industry is subtracted from the total residual of 9.9 million tons, a difference of 7.4 million tons appears.

26. It is Canadian practice to include under the heading of waste, wheat lost as the result of spoilage in field (open) and barn storage locations; grain eaten by rodents; grain blown or dropped off trucks enroute to storage or elevators; grain lost in handling, drying; and finally wheat lost as the

/result

.../10

result of the burning, destruction and collapse of grain elevators, transport vehicles, trains and ships. Canadian experience covering the period 1944/1964 reveals that waste or loss from all causes did not exceed on an average annual basis 0.25 per cent of farm production.(21) If this proportion were to hold for Soviet farm production in 1962 then it would appear that 177,000 tons of wheat would have to be written off. Comment in western literature utilizing Soviet data up to but not including 1962 points to levels of waste and loss, from excessive moisture, that exceed the proportion given above based on Canadian experience.(22)

27. Since Soviet losses through excessive moisture and poor handling and storage procedures appear to be the result of a lower level of efficiency than is currently observable on Canadian farms, apart that is from unfavourable weather conditions at harvest periods, it is possible that Canadian experience from periods earlier than those previously referred to may be a useful point of reference. It may be noted in this context that weather conditions during the 1962 harvest period were not abnormally wet throughout the country.

28. The loss of wheat from all causes in the six-year period 1933/34-1938/39 in Canada is recorded as being 4.4 million bushels per year on average. Wheat production in 1933/34-1938/39 averaged 266 million bushels per year and thus losses represented an average 1.65 per cent of production.(23)

29. In order to achieve what may be considered an upper limit of loss of wheat in the USSR in 1962, the proportion of loss observable in Canada for the period 1933/34-1938/39 can be rounded to 2 per cent yielding a tonnage loss of 1.4 million for the Soviet Union. This comes to an implicit assertion that in 1962, Soviet farm production of wheat suffered a proportional loss 8 times larger than that applicable to Canada. Some western literature on this subject, although applicable to years prior to 1962, suggests that Soviet losses have been much larger than the level indicated here.(24)

30. When an estimated loss of 1.4 million tons of wheat is substracted from a residual of 7.4 million tons, a difference of 6.0 million tons remains.

31. Soviet sources provide no information on the average dockage rate applying throughout the country in 1962 to wheat. Indeed, there is no official indication of average dockage rates for any year. Soviet sources have however expressed concern over the quantity of weeds reported growing in grain areas.(25) Nevertheless, there is no means of gleaning from such material what the average rate of dockage is for grain, let alone wheat.

32. Canadian experience in recent years reveals that dockage represents about 2.5 per cent of farm production of wheat. The bulk of the material classified as dockage consists of unthreshed heads of grain, wild oats and other weed seeds and dirt. Inasmuch as threshing equipment cannot tolerate a dirt factor of more than 1 per cent of all material handled in any unit of time, much more than one-half of all dockage consists of materials that can be processed, pelleted and fed to animals.

/11

33. In the absence of official Soviet comment, it is estimated that a further loss of 1 per cent of Soviet farm production of wheat occurs by reason of the inclusion of dirt in bunker weights of combines. No deduction need be made for unthreshed heads of grain and weed seeds since it is assumed that this dockage is accounted for under wheat fed to animals.

34. If a further subtraction is made from a residual of 6 million tons, equal to 1 per cent of farm production, in order to account for dirt content, a residual of 5.3 million tons is evident.

35. Under the item "not accounted for", the only use that could conceivably represent a substantial proportion of the 5.3 million ton residual is the illicit retention or appropriation by individuals of wheat stocks for the purpose of raising chickens or pigs on the small private agricultural holdings still tolerated by the Soviet Government. Tight food supplies in rural areas are indeed believed to have encouraged illicit attempts to supplement such supplies. Unfortunately there is no means of dealing with this possible utilization of wheat.

36. It is possible of course that all or part of the final residual of 5.3 million tons should be disposed of by deflating the estimated net domestic supply. While it is impossible to attach numbers to such propositions, it is conceivable that net domestic supply was lower than the estimated 65.5 million tons by reason of additions to reserves or simply inept statistical procedures at the level of the farm. If it were to be assumed however that a very substantial proportion of the above residual were added to reserves, the large Soviet purchases of wheat in the 1963/1964 trade year would be particularly difficult to explain.

PART 2

Estimated Wheat Supply in 1970

TABLE 3

Summary of Supply Estimates
(million metric tons)

Farm production	71.95
Net foreign trade	5.0
Gross domestic supply	66.95
Stockpiling	not accounted for
Net domestic supply	66.95

.../12

Farm Production

37. The principal determinants of likely levels of farm production of wheat in 1970 are: the area sown to wheat; the level and structure of capital inputs; the size and structure of the labour force; and finally, the weather.

38. There is little reason to expect that the area sown to wheat in 1970 will be substantially larger than the area sown in 1962. The area of potentially arable land suitable for wheat not currently employed is small, particularly as the result of the cultivation of vast areas east of the Volga after 1954. In that year the Soviet Government undertook to expand the total sown area by extending cultivation in areas of low precipitation. Between 1953 and 1957 the total area sown to wheat rose from 48 to 69 million hectares, or 119 to 170 million acres, an increase of between 40 and 45 per cent. Some of this increase in area sown to wheat resulted, however, from a reduction in fallow allowances. In 1950, 32 million hectares of land were clean fallowed. This represented 22 per cent all sown land or 31 per cent of land sown to grains. By 1958 the area clean fallowed had dropped to 24 million hectares, which was 12 per cent of the total sown area and 20 per cent of the area sown to grains. The expansion of areas sown to wheat was combined with variations in the regional structure of production, some of which were more or less predictable while others were not. Thus it was not entirely surprising that the area sown to spring wheat in the Western Siberian District of the Russian Republic would more than double from 4.4 to 9.5 million hectares or that the area sown to spring wheat in the Kazakhstanskaya District of the Kazakh Republic would rise 5 times from 3.7 to 18.9 million hectares. What was not expected was that the area under winter wheat in the traditional granary of the USSR, the Ukraine, would fall to a level of 3.7-3.9 million hectares in 1956 and 1960 having been as high as 9.0 million in 1953. Substantial portions of the land lost to winter wheat production in the Ukraine were sown to corn as part of a programme to rapidly boost animal feed supplies. It is interesting to speculate that if in 1960, the area sown to winter wheat in the Ukraine had equalled the area so sown in 1953, then the Soviet wheat harvest would have been over 9.0 million tons larger, a supplement equal to one half of the total Canadian 1965-66 wheat crop. The yield of winter wheat in the Ukraine in 1960 was 1750 kilograms per hectare or 26 bushels per acre.

39. The most recent changes in the use of agricultural land point to a reduction in the area sown to crops, an increase in the area clean fallowed coupled with small increases in the land sown to grain and wheat. Between 1958 and 1963 the sown area rose to 218.5 million hectares from 195.6. In 1964 this area contracted slightly to 212.8 million hectares. By 1963 the area clean fallowed had shrunk to 6.3 million hectares compared with 24 million in 1958; however in 1964, this area nearly doubled compared with the previous year. The area sown to grain in 1964 covered 133.3 million hectares, up slightly from 1963 (130). Spring and winter wheat were sown on an area of 67.9 million hectares in 1964. The most interesting change to note here is that relating to winter wheat acreage. The latter fell by about one-third between 1958 and 1960 but has since risen so that in 1964 it amounted to 19.0 million hectares, the largest area ever sown to winter wheat. The area under spring wheat has hovered between 48-50 million hectares for the past several years after peaking at 50.5 in 1957.

.../13

40. The kind of policy which these latter developments suggest is that the area under wheat will remain more or less stable up to and including 1970 although the structure of the sown area will change compared with 1962 to give some slightly greater weight to winter wheat. This thesis is given some support by the content of an article which appeared in the authoritative Party Central Committee daily paper Pravda, on 25 October 1965. In this it was stated that it was expedient to expand still more the area fallowed in some districts of the Kazakh Republic. The article expressed shock at the suggestion of some members of economic and agricultural organizations in the Kazakh Republic in favour of the abolition of fallow allowances up to 1970. The article asserted that it was impossible to agree with such a recommendation. Since more than a third of all the land sown to spring wheat in the USSR lies in the Kazakh Republic, a programme that sought to increase fallow land in the area would probably compel some reduction in the area sown to this crop.

41. The Pravda article is believed to reflect the feeling that while wheat output from arid areas east of the Volga will be required at least in the next five years, if current total wheat production is to be sustained, these areas must nevertheless be regarded with a good deal less optimism than was generated during the Khrushchov period when these lands came into renewed prominence. The record of a large portion of the arid lands area in grain production as a whole, covering the period 1954-1963, has been summed up on the basis of criteria set by a onetime First Party Secretary of Kazakhstan as one marked by one bumper crop (1956), four average crops (1954, 1958, 1959, 1960) and five failures (1955, 1957, 1961, 1962, 1963). Actual experience in these areas has thus not measured up to Khrushchov's general expectation of "two good years in five, one average and two poor". The former First Party Secretary of the CPSU was evidently taking for granted that the new lands would yield a minimum average of one metric ton of grain per hectare. In fact, the yield over much of the new lands area apparently fell in four individual years to about half or less the figure expected by Khrushchov. In Pavlodar Province, a major wheat producing area of Kazakhstan, in 1963 (one of 2 extremely poor years in the arid zone), the average yield of grain dropped to 180 kilograms per hectare or 160 pounds per acre.[1]

42. It is estimated that in 1970, the area sown to spring wheat will amount to 47 million hectares, which is simply an average of the spring wheat acreage for 1958-1964 rounded down. Particular importance is attached to the increase of grain output in the period 1966-1970 in areas where winter wheat is an important crop, according to a report given by First Party Secretary Brezhnev to a Plenary Meeting of the Party Central Committee on March 24, 1965. The upward trend in the area under winter wheat in recent years suggests that by 1970 the area may rise to about 20 million hectares.

43. An increase in area of land sown to winter wheat is justified on the grounds that the yields of winter wheat are much higher on average than yields of spring wheat and do not tend to fluctuate as sharply. For the years 1962, 1963, and 1964, the yield of winter wheat was 1680, 1290 and 1380 kilograms per hectare, while the yield of spring wheat was 820, 590 and 980 kilograms per hectare. Thus whereas spring wheat in this period fell and rose 28 and 66 percent, the yields of winter wheat fell and rose 23 and 7 per cent. The key factor generating sharp swings in spring wheat yields appears to be moisture. Yields
/fall off

.../14

fall off and climb abruptly depending on the amount of moisture retained from winter snow and falling during germination and growing periods. Spring wheat is grown in areas where total annual precipitation levels are lower than is true for areas given to winter wheat growing. When moisture levels rise or fall in spring wheat areas in relation to generally low average levels, yields can rise and fall sharply.

44. With spring wheat acreage for 1970 estimated at 47 million hectares and that of winter wheat at 20 million, the total area to be sown to wheat in 1970 appears as 67 million hectares, or under 1 percent less than the land so sown in 1962.

45. In 1962, Soviet agriculture received, in terms of nutrient weight, about 3.2 million tons of fertilizer.[2] On the assumption of efficient use of this tonnage in relation to the total area sown to crops, each hectare of sown land received 14.8 kilograms of fertilizer, or each acre, 13.2 pounds. By 1970, much larger supplies of fertilizer should be forthcoming since the Soviet Government has placed considerable emphasis on the expansion of the industries manufacturing chemical fertilizers. Although nutrient weight output of chemical fertilizer was slated to rise to over 16 million tons in 1970, according to a twenty year plan of general economic development published in 1961, the actual expansion of fertilizer output in recent years has lagged somewhat, pointing to the possibility of lower than expected goals for 1970. The forecasts of fertilizer output made in 1958 for 1965, for example, which were originally set down at about 8 million tons, will not be achieved until the end of 1966.

46. If the output of fertilizers rises between 1966 and 1970 at an overall rate equal to that estimated for the previous five year period (50 percent), then 1970 production should amount to about 14 million tons. On the assumptions that the share of fertilizer output received by agriculture remains at about 85 per cent and that the sown area is unchanged, the amount of fertilizer available per hectare will rise to 55.5 kilograms, or 49.5 lbs. per acre. This will provide a dressing weight per unit of sown area that is 4 times larger than that applicable to 1962. Currently the Soviet Government places a high priority on the use of fertilizers for technical crops and predicts that in 1966 the requirements of these crops for fertilizers will be fully met. It is noted, in relation to grain crops, simply that the use of fertilizers will be expanded.[3] From the evidence available it appears that the use of fertilizers on wheat land has been restricted and in terms of dressing weight per hectare possibly lower in 1962 than the 14.8 kilograms previously mentioned. Thus it cannot be readily predicted what the effect of increased supplies of fertilizer to agriculture will mean for dressings of wheat acreage.

47. What does seem clear is that, if increased dressings of fertilizer are applied to wheat, they will be applied to winter wheat and those areas of spring wheat with precipitation levels above average for most of the wheat lands east of the Volga. This restriction of use follows simply from the fact that fertilizers are largely without value where precipitation levels are extremely low, as is the case in many Soviet spring wheat areas. Canadian experience in certain prairie areas bears this out. A nine year experiment at a Swift Current,

/Saskatchewan

.../15

Saskatchewan location, showed that the application of fertilizer in this low precipitation area made no difference to yields.[4]

48. First Party Secretary Brezhnev, in the course of his report to the Party Central Committee Plenum in March 1965, stated that "the quantities of machinery available to collective and state farms (the main producers of grains) are still inadequate. We still do not have the necessary numbers of tractors, automobiles, combines and other complex farm machines, or cultivators, harrows and seeders. This leads to the slowing down of field work and to reductions in yields..... Owing to insufficient numbers of combines and other machines, the harvesting of cereals not infrequently takes from 30 to 40 days, causing great losses in the harvest."

49. It is planned, according to Brezhnev, to deliver about 1.8 million tractors to agriculture in the period 1966-1970 plus 625,000 grain combines and 1.1 million trucks. These deliveries of equipment represent substantially increased supplies of such machinery in comparison with the period 1960-1965.[5] If the expected quantities of agricultural implements are actually forthcoming there should be a very sharp improvement in the timeliness of field work in general and thus some improvement in yields. This must clearly be of considerable importance for the cultivation and harvesting of wheat lands.

50. In 1962, Soviet state and collective farms employed about 27 million persons in total or 125 persons per 1000 hectares of sown area. This was roughly 5 times the number of persons employed per unit of sown area in Canada in 1962.[6] Provided the delivery of equipment to agriculture improves as planned there could be a considerable reduction of persons employed per unit of sown land by 1970. The movement of people off the land into urban areas will tend to be slowed however by probably continuing short supplies of housing in the cities and possibly by a fall-off in demand for labour by industry. In any event the most important point regarding labour supplies up to and including 1970 is not the availability of all farm labour per unit of land but rather the supplies of particular types of skills required for the operation and maintenance of modern equipment stocks. Soviet farms have frequently experienced great difficulty in retaining their skilled personnel. Living conditions and job opportunities on many Soviet farms are poor by urban standards and workers who have skills saleable in industrial locations desert the farms in favour of what they consider to be superior employment, opportunity and living standards. It seems likely that the government will make a more determined effort to attract and retain increased supplies of skilled labour in the future inasmuch as any attempted increase in mechanization of agricultural work will be fruitless in the absence of adequate numbers of skilled workers. The previous history of Soviet agriculture tends to place some real doubt that skilled labour supplies will be either easy to procure or retain in the future.

51. If the area of land sown to winter wheat in 1970 is roughly 10 per cent greater than that applying to 1962 and if supplies of fertilizers, tractors, trucks and grain combines increase, then assuming no serious shortages of skilled labour and average weather it is estimated that the harvest of winter wheat could amount to 32 million metric tons. The yield of 1600 kilograms per hectare implicit in this estimate was derived by comparing the average yields of 1424 and 1510 kilograms for 1955-1959 and 1960-1964 respectively and applying the proportional difference of 6 percent to the 1960-1964 average.

.../16

52. It is estimated that the spring wheat harvest will amount to 39.95 million metric tons in 1970. This figure implies a yield of 850 kilograms per hectare since the area expected to be under cultivation is 47 million hectares. The estimated yield was developed by again comparing averages for 1955-1959 and 1960-1964. In the first five year period referred to the average yield was 824 kilograms per hectare while in the last it was 832. This is a difference of less that 1 per cent. The difference applied to the 1960-1964 average, to derive an estimate for 1970, was slightly more than 2 percent. A somewhat higher difference is probably justified on the grounds that a better supply of farm equipment will be productive. Higher supplies of fertilizers to spring wheat areas may or may not be productive. The key point is of course simply that the productivity of the arid areas upon which so much spring wheat is produced is unpredictable and therefore the most reasonable estimate would appear to be the most conservative one.

53. A sum of the estimates given above for winter and spring wheat production gives a farm production estimate for 1970 of 71.95 million tons, or 1-2 percent more than was produced in 1962.

Net Foreign Trade

54. The size of Soviet exports of wheat in 1970 will depend on the extent to which major importers such as Czechoslovakia and East Germany will continue to rely on Soviet grain as well as the nature of Soviet policy with regard to grain deficit areas in Asia, Africa and South America including Cuba. There are good opportunities for expanding wheat output in Czechoslovakia up to 1970 and thus Soviet exports to this country could diminish considerably. Reduction in supplies to the latter however may well be balanced by increased shipments to countries in Asia etc. It is assumed here that Soviet trade in wheat in 1970 will not be much different from trade in 1962, thus a figure of 5 million tons is accepted.

Gross Domestic Supply

55. If net trade in wheat involves a surplus of exports over imports of 5 million tons, then farm production must be reduced by this amount to give gross domestic supply. The resultant figure is 66.95 million tons.

Stockpiling

56. It is assumed that no stockpiling will take place in 1970.

Net Domestic Supply

57. Net domestic supply in 1970 is estimated to be 66.95 million tons.

.../17

Estimated Wheat Utilization in 1970

TABLE 4

Summary of Utilization Estimates
(million metric tons)

Human consumption	33.6
Animal feed	13.8
Seed	11.4
Industrial use, waste, dockage and not accounted for	8.15
Total	66.95

Human Consumption

58. The population of the Soviet Union grew at a rate of 1.49 per cent in 1962, but this rate has been declining. In 1964 the net rate of population had fallen to 1.29 per cent. For the purposes of this paper it is assumed that the population of the USSR up to 1970 will increase at current rates and that in 1970 it will number 247 million persons or 24 million more than in 1962. On the basis of a per capita intake of wheat flour and bread equal to that used for 1962, the USSR will require 33.6 million tons of grain for human needs in 1970.

59. The proposition that per capita intake of wheat flour and bread in 1970 will remain unchanged compared with 1962 assumes that while Soviet consumers will wish to substitute high protein foods (meat etc) for grains, potatoes and other vegetables up to 1970, the rate of change will be so low that consumption of wheat-based bread and flour will remain virtually unchanged. This projection is based on the poor performance of the Soviet livestock industry in recent years and the recent trend in growth of personal incomes.[7]

Animal Feed

60. Very substantial recent increases in production of such animal feedstuffs as barley, sugarbeets and potatoes suggest that the use of wheat for animal feed will probably remain stationary or decline in the next five years.[8] Future high increases in output of particularly sugar beets seem assured since as a technical crop sugar beets will have a share in the priority allocations of fertilizers. The amount of wheat fed to animals in 1970 may well depend primarily on how successful field teams are in compressing harvest periods and minimizing damage and loss from possible late rains or early snow falls. It is estimated that the use of wheat for animals will in 1970 not show any change compared with 1962 and will therefore equal 13.8 million tons.

.../18

Seed

61. While some improvement may occur in the selection of grain for seeding, it is not thought likely that this will substantially alter the 1962 requirement for 170,000 tons of seed per 1 million hectares of wheat land. Thus the quantity of seed that will be needed in 1970 is estimated at 11.4 million tons.

Industrial Use, Waste, Dockage and Not Accounted For

62. The abstract of the Soviet Annual Plan for 1966 contains the forecast that "the outlay of grains for the manufacture of alcohol is to be sharply curtailed."[9] This announcement is thought to indicate that the use of grains in industry will progressively decline as other inputs are made available as part of the programme for the rapid expansion of all areas of the chemical industry, including the distillation of ethyl alcohol.

63. With the above points in mind it is estimated that the use of wheat by industry will decline by 0.5 million tons compared with 1962 and stand at 2.0 million tons in 1970.

64. While a larger pool of equipment may help reduce all loss from waste as well as that included under dockage, it is nevertheless estimated that total loss will amount to 3 percent, the proportion applicable to 1962 output, or a total of 2.16 million tons.

65. A subtraction of the amounts given for industrial use and all loss leaves a residual of 3.99 million tons. This quantity would be available for stockpiling or increasing exports assuming the validity of the itemized estimates already given.

.../19

FOOTNOTES

APPENDIX A

Part 1

1. All tons referred to in this paper are metric unless otherwise stated.

2. See Table 1 in Appendix B for statistics of grain and wheat production, acreage, yields, etc.

3. See Table 2.

4. See Tables 3, 4 and 5.

5. See Tables 6 and 7.

6. One observer of Soviet economic activities noted in 1953 that "we have seen that in 1950 the USSR was vigorously engaged in restoring the pre-war level of real wages - an operation not yet completed today." Refer to, Solomon M. Schwartz, Labor in the Soviet Union (London: The Cresset Press, 1953), p. 237. Real wages are not of course entirely composed of foodstuffs let alone wheat flour and bread, however, Soviet families spend even today over 50 per cent of income on food. In 1953, it was a higher proportion. The remark tends to support the principal contention raised at this point. See also Abram Bergson, The Real National Income of Soviet Russia Since 1928. (Cambridge: Harvard University Press, 1961), p.257, and U.S. Congress, Joint Economic Committee, Dimensions of Soviet Economic Power, 87th Congress, 2nd Session 1962, p. 361.

7. In 1929 the urban population of the USSR was 19 per cent of a total of 153.4 million. By 1962 the urban population was 52 per cent of a total of 223 million, or 115 million.

8. The data is said to be taken from an article by G. Polyak, "Contribution to the Problem of the Standard of Living of the Working Class," in Planovoye Khozyaistvo (May-June, 1931). The source used here is Schwartz, Labor in the Soviet Union, pp. 142-143. See Table 8 in Appendix.

.../20

9. Werner Klatt estimates that average consumption in 1963-1964 was about 3,000 calories per person per day. See Werner Klatt, "Output and Utilization of Foodstuffs in the Soviet Union," Studies on the Soviet Union, Symposium Edition, The "Great Decade" in Soviet Agriculture, New Series, III 4, (Munich: Institute for the Study of the USSR) 1964, p. 105. See United Nations, Food and Agricultural Organization, Production Year Book 1964, (Rome, 1964) p. 252.

10. Refer to Schwartz, Labor in the Soviet Union, p. 142. See also, Naum Jasny, The Socialized Agriculture of the USSR. (Stanford: Stanford University Press, 1949) p. 555. In the latter study Jasny points out that "surveys of 1923-24 to 1927 rarely showed a caloric intake per rural adult male of less than 4,000." It must be noted that the caloric intake of 2338 used in the text of this paper applies to calories consumed per capita in the families of state workers. This last figure is thus an average for man, woman and child. The average for families in rural areas must have been well below the figures quoted by Jasny for adult males. The use of an average for the entire population in 1928 of 2,338 calories may therefore be close to the actual case.

11. The size of the average wheat harvest for the period 1928-1932 was 21.7 million tons while the size of the average for 1958-1962 was 69.5 million tons. The population in 1928 was roughly 150-152 million. By 1962 the population amounted to an estimated 223 million. The rising importance of wheat may be demonstrated not only by observing the large rise in absolute output over a 30 year period but by noting the fall-off in output of rye (a grain which has been readily substituted for wheat in the past - see Table 8 in Appendix B). Production of rye prior to the Russo-German War, 1941-45, appears to have been in the vicinity of 20 or more million tons whereas the average for 1954-58 was 15.3 million tons. See Jasny, Socialized Agriculture, pp. 533-535, for a discussion of the rise in wheat output and extent of substitution of wheat for rye on arable areas prior to 1941. Although it has been argued (cf. Jasny, Socialized Agriculture p. 552) that the increase in the proportion of urban dwellers in the USSR has tended to diminish the average per capita consumption of grain products, no diminution in consumption of wheat flour and bread need take place. On the contrary, since wheat bread and wheat flour are considered superior staples by Soviet citizens, a rise in the consumption of these is compatible with a diminution in the intake of grains as a whole. Secondly, since it is a well known fact that the USSR has never developed a system of distribution for perishable commodities that is commensurate with the country's physical production capacities for these goods, urban residents at least have had to rely to a greater

/extent

.../21

extent than they would like on foodstuffs whose production and distribution is most readily undertaken by the kind of mechanism available to the country - and this means preeminently grains, and in this context, particularly wheat. See also S.S. Kabysh "The Permanent Crisis in Soviet Agriculture", Studies on the Soviet Union. Symposium Edition, The "Great Decade" in Soviet Agriculture, New Series, III, 4, 1964, for a general discussion of grain requirements.

12. Wheat flour is assumed to have accounted for an additional 150 calories. Since 100 grams of all-purpose flour in Canada yields 350 calories it has been assumed that the gram weight required in the USSR to provide 150 calories would be 43.

13. Although it is not taken to be of integral importance here it may be of interest to note that while in Canada, currently, some 65.3 pounds of bread can be produced on the basis of 43.2 pounds of flour, in the case of the Soviet Union there is every reason to believe that the input-output ratio is smaller than the above, $(\frac{43.2}{65.3})$. In his book on Soviet Agriculture, Naum Jasny notes that in the interwar period the Soviet Government could claim the achievement of having increased the water content of bread far beyond the proportions customary in other countries' (cf. p. 558). Since wheat output in the USSR is now well above pre-second world war levels it is likely that the water content is lower than was previously the case.

14. On the basis of figures given by the Marketing Unit, Economics Division, Department of Agriculture, Canada, 138.9 pounds of grain are normally required in order to extract 100 pounds of flour. This is taken to be the result of using a Fluted Roller Grinding Process. If a Smooth Roller Grinding Process in used, a high semolina content results, but the flour weight rises relative to the Fluted Process. According to the Foods and Beverages Unit, Dominion Bureau of Statistics, an average extraction rate for flour from wheat is likely in the range of 75 per cent There is little doubt that this probably understates the quantity of flour that most Soviet mills are able to extract from any given weight of grain. Jasny, Socialized Agriculture, has material relevant to this point on page 760 although the discussion pertains to the interwar period.

15. The feeding of wheat to animals in Canada has on an average for 1955-56 - 1964-65 required nearly 60 million bushels per year or

/some

.../22

some 1.6 million metric tons. The quantity fed each year depends on the quality of the crop and the state of the market. A fall-off in demand for wheat or larger than normal supplies combined with a poor growing season tends to boost the feeding of wheat to animals. Wheat is fed in some sections of the Canadian West in troughs, after having been crushed. In sugar beet growing areas of Southern Alberta it is mixed with sugar beet pulp before feeding to beef animals. Recent articles in a notable British daily paper reveal that wheat is fed to animals in both wheat surplus and deficit areas of Western Europe. See The Financial Times 13 July, 1965, and 3 November, 1965. The source of the data used here concerning the feeding of wheat to animals in Canada is a document on grain balances prepared by the Agriculture Division, Crops Section, Dominion Bureau of Statistics. The item referred to is described as wheat absorbed by "animal feed, waste and dockage." Since waste is negligible and dockage a part of animal feed eventually, virtually all the wheat involved is fed to animals.

16.A. The Commodity Analysis Section of the Economic Division of the Department of Agriculture, Canada provides the following data:

Ratio of pounds of cereal grain

required to produce one pound of product

		Agricultural Regions	
		Western	Eastern
Beef	1952	6.98	2.85
	1963	5.89	2.87
Pig Meat	1952	8.10	7.25
	1963	8.27	7.34
Mutton Lamb	2.43 - 4.03 (high level of forage utilization)		
Poultry	1952	9.74	7.53
	1963	8.02	6.32
Milk	1952	.4	.37
	1963	.3	.29
Eggs	6 eggs equal one pound of meat for cereal requirement purposes.		

An average diet for a mature horse would be 1 pound of grain per day per 100 pounds of body weight.

.../23

16 B. Soviet production of meat, milk and eggs in 1963 was as follows:

Beef	3.7	million metric tons
Pig Meat	4.3	" " "
Mutton, Goat Meat	1.1	" " "
Poultry	0.8	" " "
Milk	61.2	" " "
Eggs	28.5	billion pieces

The application of Canadian ratios for 1963 in the grain deficit areas of eastern regions in (A) to Soviet commodity output in (B) yields the following

Grain requirement for beef	-	3.7 m.ts. x 2.87 lbs.	=	10.62 m. tons
" " " pigmeat	-	4.3 x 7.34	=	31.56 " "
" " " mutton and goat meat	-	1.1 x 2.43	=	2.67 " "
" " " poultry	-	0.8 x 6.32	=	5.06 " "
" " " milk output	-	61.2 x 0.29	=	17.75 " "
" " " egg output	-	13.6325 billion pounds ÷ 2204.6	=	6.18 " "
support of 3 million horses				5.00 " "
Total grain requirements				78.84

The horse herd in 1962 numbered some 9 million animals. It was assumed here that one-third of this number consisted of mature working animals with an average body weight of 1000 pounds.

In 1954 Khrushchov postulated that with a harvest of 118 million tons of grain, the requirements of the USSR for grain fed to animals would be satisfied with the provision of 51.4 million tons. The application of Canadian grain-commodity-output ratios for

/1952

1952 to estimates of Soviet meat, milk and egg production for 1954-55 produces a requirement figure of 58.6 million tons. Actual Soviet grain production in 1954 was only 85.6 million tons, however, and therefore the comparison of the above two requirement figures is less favourable than first appears. These comparisons appear to indicate that the use of Canadian grain feed ratios overstates Soviet needs for animals. Part of the inflation likely results from the fact that potatoes are extensively used in the USSR to feed pigs. It is possible however that in 1962 grain was substituted for potatoes as an animal feed since the potatoes crop in that year was nearly 20 per cent below the average level for 1958 - 1961.

17. See IZVESTIA, 7 September, 1965 (lead article front page).

18. Wheat seeding rates across Canada in 1964-1965 were as follows:

Maritimes.....	2.0	bushels per acre
Quebec, Ontario.....	1.6	" " "
Manitoba	1.5	" " "
Saskatchewan, Alberta.....	1.4	" " "
British Columbia.....	1.6	" " "

Source: Agriculture Division, Crops Section, Dominion Bureau of Statistics.

19. See Selskaya Zhizn, 23 November, 1965.

20. See Stroitelstvo Kommunizma v SSSR, Razvitiye Selskogo Khozyaystva, Vol. I, Moscow, 1962, p. 90.

21. See Canada, Dominion Bureau of Statistics, Supply and Disposition of Principal Grains, Canada, Crop Years 1933-34 - 1965-66.

22. See Carl Zoerb, "The Virgin Land Territory: Plans, Performance, Prospects," Studies on the Soviet Union, Symposium Edition, The "Great Decade" in Soviet Agriculture, New Series, III, 4, 1964, p. 34.

.../25

23. While relative inefficiency is believed to be a factor in the observable difference in losses over time in Canada, changes in statistical method also appear to be a factor. See Canada, D.B.S., Supply and Disposition of Principal Grains, Crop Years 1933-34 - 1965-66.

24. See article referred to in footnote 22. Soviet losses may well be much higher than any Canadian experience would indicate. Carelessness in the harvesting and handling of grain could push losses beyond 10 per cent of all stored grain in any season. An American study notes that the most important single factor in the storage of grains and seeds is the moisture content. Insect development is discouraged by low moisture content and so is mold and bacterial activity. Under storage conditions similar to those in Nebraska, wheat, etc., can be stored for a year, though not for seed use, with little loss if the moisture content does not exceed 13 percent. Safe storage is aided if the ears are freed from cracked kernels and foreign matter which provide food for insects and obstruct air movement through the pile of grain. The same study notes that loss of stored wheat in the Great Plains region of the U.S.A. may be as high as 10 per cent in a season as a result of attack by insects. See W.T. Pentzer, "Storage of Agricultural Raw Products", Handbook of Food and Agriculture, ed. Fred C. Blanck (New York: Reinhold Co., 1955), pp. 322-323. See also S. Kabysh, "The Permanent Crisis in Soviet Agriculture" Studies on the Soviet Union, IV, 4, 1965, p. 137.

25. See S. Kabysh, "The Permanent Crisis in Soviet Agriculture," Studies on the Soviet Union, New Series, IV, 4, 1965, pp. 129-130.

Part 2

1. See Carl Zoerb, "The Virgin Land Territory: Plans, Performance, Prospects," Studies on the Soviet Union, Symposium Edition, The "Great Decade" in Soviet Agriculture, New Series, III, 4, 1964, pp. 32-5.

.../26

2. The estimate of nutrient weight of chemical fertilizer delivered to Soviet agriculture in 1962 was based on the ratio between the commercial weight of production and nutrient weight revealed in Pravda 26 July 1965. This issue of Pravda carried the results of the first six month period of the annual economic plan for 1965. Commercial weight output was given as 14.667 million tons and nutrient weight as 3.507 million tons.

Production and Allocation of Fertilizers, USSR, 1958-1966

million metric tons

	1958	1959	1960	1961	1962	1963	1964	1965	1966
Factory Output Commercial Weight	12.4	12.9	13.9	15.3	17.3	19.9	25.6	(30)	(34)
Nutrient Weight				(3.4)	(4.0)			(7)	
Delivered to Agriculture Commercial Weight	10.6	11.1	11.4	12.1	13.7	16.0	22.0	26.0	(29.5)

Source: Current issues of the Soviet Statistical Abstract and Pravda of 26 July 1965.

3. See Pravda, 8 December, 1965, p.2, (section on, "Development of Agriculture")

4. See Canada, Department of Agriculture, Manures, Fertilizers and Soil Amendments, Their Nature, Function and Use, Science Service and Experimental Farms Service, Ottawa, 1951, p. 65.

5. The two tables which follow make possible comparisons between total output of key equipment inputs into agriculture and actual deliveries to the sector as well as changes in deliveries over time.

.../27

Production of Tractors, Combines and Trucks in the USSR, 1960-1970

(thousands of units)

	1960	1961	1962	1963	1964	1965	1970
Tractors	238.5	263.6	287.0	325	329		625
Combines	59.0	76.3	79.8	82.9	83.6		125
Trucks (and busses)	384.8	406.4	411.6	413.9	418		800

Numbers of Tractors, Combines and Trucks Supplied Agriculture, USSR, 1960-1970

(thousands of units)

	1960	1961	1962	1963	1964	1965	1966	1967	1968	1970
Tractors	157	185.3	206	239.3	222	←			1790	→
Combines	57	70.0	79.2	79.6	78	←			625	→
Trucks	66.1	69.7	82.6	68.8	80	←			1100	→

Source: All figures from current issues of the statistical abstracts of the USSR, Central Statistical Bureau.

.../28

6. There were 653,000 persons employed in agriculture in Canada in 1962. The total sown area in Canada in 1962 was 59-60 million acres or 24 million hectares.

7. Meat output on a slaughter weight basis for selected years was as follows:

	1958	1962	1963	1964
		million metric tons		
	7.7	9.5	10.2	8.2
including beef	2.7	3.3	3.7	3.6
pigmeat	3.3	4.0	4.3	2.7

Source: USSR; Council of Ministers, Central Statistical Bureau, The USSR in Figures in 1964, p. 82.

Pravda, 8 December, 1965 p.3, contains the statement "Real incomes are expected to rise in per capita terms by 6.5 percent (in 1966). This is a high rate of growth. It is almost twice as high as the average annual rate of growth in real incomes for 1959-1965." Real income of course includes the value of health and educational services while personal income consists largely of wages and salaries. The latter is not thought to have grown at any higher a rate than real income.

Rachel E. Golden, in an article, "Recent Trends in Soviet Personal Income and Consumption," Dimensions of Soviet Economic Power, p. 354, provides the following data:

.../29

Average Annual Rates of Growth of Real

Personal Disposable Income

(Per Cent)

	1951-55	1956-61	1956-58	1959-61
Total	8.7	6.6	7.1	6.2
Per capita	7.1	4.9	5.4	4.4

8. The production of barley, sugarbeets and potatoes, in recent years was as follows:

	1958	1959	1960	1961	1962	1963	1964
Barley	13.0	10.2	16.0	13.3	19.3	19.8	28.5
Sugar beets	54.4	43.9	57.7	50.9	47.4	44.1	80.3
Potatoes	86.5	86.6	84.4	84.3	69.7	71.8	93.0

Source: USSR, Council of Ministers, The National Economy of the USSR in 1961, pp. 300-301, and, The USSR in Figures in 1964, pp.72-73.

9. Pravda, 8 December, 1965, p. 2 (Section on "Development of Industry and Transport").

.../30

APPENDIX B

TABLE 1

Official Grain and Wheat Harvest, Yields and

Area Data, USSR 1963, 1958 - 1964

	1953	1958	1959	1960	1961	1962	1963	1964	1959-62 average
Winter and Spring Wheat Harvests	41.3	76.6	69.1	64.3	66.5	70.8	49.7	74.2	69.5
(million metric tons)									
Winter Wheat	19.8	29.5	26.4	18.2	29.2	30.5	21.2	26.3	
Spring Wheat	21.5	47.0	42.7	46.1	37.3	40.3	28.5	47.9	
Area Sown to Wheat	48.3	66.6	63.0	60.4	63.0	67.4	64.6	67.9	64.1
(million hectares)									
Winter	17.8	18.2	17.4	12.1	17.3	18.1	16.4	19.0	
Spring	30.5	48.4	45.6	48.3	45.7	49.3	48.2	48.9	
Wheat Yields									
(100 kilos per hectare)									
Winter Wheat	11.1	16.2	15.2	15.1	16.9	16.8	12.9	13.8	
Spring Wheat	7.0	9.7	9.4	9.5	8.2	8.2	5.9	9.8	
(bushels per acre)									
Winter Wheat	16.5	24.1	22.6	22.4	25.1	25.0	19.8	20.5	
Spring Wheat	10.4	14.4	14.0	14.1	12.2	12.2	8.8	14.6	
Total Grain Harvest	82.5	141.2	125.9	134.4	138.0	148.2	110.7	157.5	
(million metric tons)									
(excluding unripe ensiled corn)	82.5	134.7	119.5	125.5	130.8	140.2	107.5	151.5	
All wheat as % of Total Grain	50	54	55	49	48	48	45	47	
(excluding unripe ensiled corn)	50	57	58	51	51	51	46	49	
Wheat Acreage as % of Total Grain Acreage.	45	53	53	50	49	50	46		
(excluding unripe ensiled corn)		55	55	52	52	52	50	51	
Total Cultivable Land									
million hectares						223.5			
million acres						552.3			
Sown Area									
million hectares						216.0			203.1
million acres						533.7			

.../31

(Cont'd)

TABLE 1 CONT'D

	1953	1958	1959	1960	1961	1962	1963	1964	1959-62 average
Area Sown to All Grains	106.7	125.2	119.7	121.7	128.3	135.9			126.2
(excluding unripe ensiled corn)		121.5	114.5	115.5	122.2	128.7	130.	133.3	
Fallow Area									
million hectares						7.5			
million acres						18.6			

Source: USSR, Council of Ministers, Central Statistical Administration, The National Economy of the USSR 1958 (and years to 1963), The USSR in Figures in 1964.

.../32

TABLE 2

Number of Combines, Tractors and Trucks

Available to Soviet Agriculture

1960 - 1962

	1960	1961	1961/1960	1962	1962/1961
Combines	497,200	498,100	100.2	519,600	104.31
Self propelled	233,000	235,000	100.9	335,000	143.0
Tractors	1,122,300	1,212,000	107.99	1,328,900	109.6
Trucks	778,000	796,000	102.3	875,000	109.9

Source: The National Economy of the USSR, 1962, p. 324

TABLE 3

Soviet Imports and Exports of Wheat and Wheat Flour

1960-61 - 1963-64

(July-June Years: Wheat Equivalent)

(million metric tons)

	Imports			Exports		
	Wheat	Flour	Total	Wheat	Flour	Total
Average 1954-55 - 1958-59	.203	---	.203	3.437	---	3.437
Average 1959-60 - 1963-64	1.630	.276	1.906	4.298	.151	4.449
1960-61	.204	---	.204	5.058	---	5.058
1961-62	---	---	---	4.737	.315	5.052
1962-63	---	---	---	5.048	.282	5.330
1963-64	7.887	1.378	9.265	1.126	.156	1.282

The absence of figures is not a sign that imports were necessarily zero. In some cases there were no imports but in others the data have not been included by the source.

Source: International Wheat Council World Wheat Statistics, 1965 (London, 1965), pp.22-23, pp.40-41

TABLE 4

Soviet Wheat Imports and Exports

1958 - 1964

(calendar years)

(million metric tons)

	Imports	Exports
1958	.323	3.879
1959	.247	6.052
1960	.098	5.624
1961	.656	4.801
1962	.045	4.765
1963	3.053	4.106
1964	7.281	2.031

Source: USSR, Ministry of Foreign Trade, The Foreign Trade of the USSR 1959, and (1960,1961,1962,1963,1964)

TABLE 5

Soviet Wheat Imports by Country of Origin 1958-1964

(calendar years)

(million metric tons)

	1958	1959	1960	1961	1962	1963	1964
Canada	.283	.199	nil	.486	nil	2.323	3.885
Australia	nil	nil	nil	nil	nil	.273	1.402
Rumania	nil	nil	nil	.162	.005	.395	.005
U.S.A.	nil	nil	nil	nil	nil	nil	1.785
Poland	.040	nil	nil	nil	nil	nil	nil
China	nil	.048	.048	nil	nil	nil	nil
Argentina	nil	nil	nil	nil	nil	.006	.106
Mongolia	nil	nil	.050	.005	.040	.055	.099
Totals	.323	.247	.098	.653	.045	3.046	7.282

TABLE 6

Soviet Wheat Exports According to

Primary Destination
(July-June Years)

million metric tons

	1960-61	1961-62	1962-63	1963-64[1]
1. Europe				
(a) Non Communist				
Austria	nil	nil	nil	.002
Malta	nil	nil	.010	.003
Belgium/Luxembourg	.068	.058	.023	.007
Finland	.085	.101	.328	.023
Germany	.107	.113	.126	nil
Greece	.006	nil	.005	nil
Italy	.241	.003	nil	nil
Netherlands	.206	.125	.128	.046
Norway	.094	.062	.085	.009
Spain	.004	nil	nil	nil
Sweden	.050	.026	.087	.010
Switzerland	.011	nil	.002	.002
United Kingdom	.290	.344	.391	.072
France	nil	.070	.013	nil
Iceland	nil	.002	.002	.002
(b) Communist				
Albania	.112	nil	nil	nil
Bulgaria	.087	.093	.151	.039
Czechoslovakia	1.020	.881	1.162	.306
Germany	1.296	1.341	1.193	.539
Hungary	.373	.061	.061	.002
Poland	.220	.594	.186	nil
Rumania	.001	nil	nil	.030
Yugoslavia	nil	nil	.021	nil
2. Rest of World				
British Guiana	nil	nil	.001	.002
Vietnam, Laos, Cambodia	nil	.006	.007	
Cuba	.146	.408	.468	.085
Indonesia	nil	nil	.001	
Brazil	.185	.292	.513	.052
Saudi Arabia	nil	nil	.009	.003
Iraq	.078	nil		
Lebanon	.004	.021	.005	.003
North Korea	nil	.065	.050	nil

(Cont'd)

.../35

	1960-61	1961-62	1962-63	1963-64[1]
Japan	.039	.015	.062	nil
Libya	.021	.002	.020	.008
Sudan	.019	.059	.050	nil
Ceylon	nil	nil	.024	.016
Tunisia	.011	nil	nil	nil
China (Mainland)	nil	.160	.046	nil
Afghanistan	nil	nil	.023	.002
Iran	nil	nil	.009	.001
Algeria	nil	nil	.030	nil
Guinea	nil	nil	.012	nil
Ghana	nil	nil	nil	.001
3. Unspecified	.284[2]	na	na	na
4. World Total	5.058	5.052	5.330	1.282

1 Provisional

2 Source: International Wheat Council, World Wheat Statistics, 1965 (London, 1965) pp. 24-35.

.../36

TABLE 7

Soviet Wheat Exports According to Primary Destination 1958-1964 (Calendar Years)

million metric tons

	1958	1959	1960	1961	1962	1963	1964
1. Europe							
(a) Non Communist							
Sweden	.042	.072	.054	.033	.042	.068	nil
Holland	.046	.337	.175	.199	.096	.118	nil
Denmark	nil	.026	.005	nil	nil	nil	nil
Italy	nil	nil	.061	.184	nil	nil	nil
Norway	.104	.080	.092	.080	.079	.041	nil
Germany	nil	.016	.140	.113	.070	.086	nil
Finland	.271	.288	.169	.106	.219	.166	.070
France	.064	.167	nil	.039	.030	.012	nil
United Kingdom	.078	.130	.193	.338	.345	.276	nil
Belgium	.003	.030	.043	.085	.030	.019	nil
(b) Communist							
Yugoslavia	.091	.114	nil	nil	nil	nil	nil
Poland	.237	.852	.749	.303	.505	.163	.050
Rumania	.193	nil	.101	nil	nil	nil	.400
Czechoslovakia	.956	1.649	1.399	.768	.903	1.157	.458
Germany	1.298	1.366	1.489	1.227	1.251	1.069	.684
Bulgaria	.023	.140	.132	.005	.094	.150	.093
Hungary	.080	.224	.196	.386	.040	.063	nil
2. Rest of World							
Libya	nil	nil	.012	.012	.007	.012	nil
North Korea	nil	.040	.060	.240	.050	.050	nil
Sudan	nil	nil	nil	.046	.065	.017	nil
Japan	nil	.025	.055	.017	.039	.031	nil
Iraq	nil	.117	.029	.049	nil	nil	nil
Lebanon	nil	nil	.011	.010	.014	.005	nil
Cuba	nil	nil	.058	.192	.269	.264	.266
Brazil	nil	nil	.205	.202	.413	.242	nil
TOTALS	3.486	5.673	5.428	4.634	4.561	3.985	2.021

.../37

TABLE 8

Annual Food Consumption in Workers' Families

Kilogram Per Capita

Food	1928-29 (1)	1929-30 (2)	Per Cent Ratio (2:1)
Rye flour and bread[1]	57.2	78.8	137.8%
Wheat flour and bread[1]	93.1	73.9	79.4
Cereals	15.7	16.7	106.4
Potatoes	114.7	154.7	134.8
Other vegetables	53.6	62.0	115.7
Meat and fats	51.0	40.7	80.0
Fish	11.0	16.8	152.7
Milk	77.7	79.5	102.3
Butter	2.4	2.2	91.8
Oil	3.8	3.4	89.5
Eggs	4.3	3.4	79.1
Sugar	15.6	12.8	82.1

1 Bread in terms of flour content

Source: Solomon M. Schwartz, Labor in the Soviet Union (London: The Cresset Press, 1953), p. 143.

JIB/CAN/EXD/R

CAN UK US EYES ONLY
SECRET

Copy No 20

JIB(CAN) 4/66

DATE 22 February 1966

JOINT INTELLIGENCE BUREAU
Ottawa

Communist Economic and Military Aid Activities in the Underdeveloped Areas

January, 1966

JOINT INTELLIGENCE BUREAU
Department of National Defence
OTTAWA, CANADA

DISTRIBUTION

External Affairs (2 for D.L.2) (2 for Econ. Div)	1 - 4	DGI (LIBRARY)	13
Finance	5	Sec/EIC	14
Trade & Commerce	6 - 8	JIB(O)LO(L)	15
External Aid Office	9	JIB(O)LO(W)	16
Bank of Canada	10	RCMP	17
National Defence College	11	DGI/DSTI	18
CBNRC (Library)	12	JIB(O)	19
		File	20
		Spares	21 - 27

SECRET
CAN UK US EYES ONLY

JIB(CAN) 4/66

Communist Economic and Military Aid Activities in the Less Developed Areas - January 1966

PART I - ECONOMIC AID

AFRICA

Morocco

1. The Soviet Union may soon extend an economic development credit to Morocco to help finance Morocco's Three Year Plan (1965-1967). A Soviet economic delegation visited Morocco recently to conduct surveys for agricultural and industrial projects which Morocco submitted to the Soviet Union for its consideration early in 1965. (CONFIDENTIAL)

2. Up to the present time communist aid to Morocco has been limited to a small military aid agreement with the Soviet Union, which was terminated by Morocco in 1965, and a development credit from Poland. About $5 million of the Polish loan was drawn in 1962 for the construction of a sugar refinery. Under a new agreement with Morocco concluded in December 1965, Poland has agreed to provide Morocco with $30 million worth of Polish equipment under a credit repayable over a nine-year period. (CONFIDENTIAL)

Algeria

3. According to a US report the Soviet Union has agreed to help finance the construction of twenty-eight small and medium-size dams in central, eastern and western Algeria. The dams are part of a large irrigation scheme.

4. This is the first major project to be undertaken by the Soviet Union under a $100 million credit extended to Algeria in 1963. (CONFIDENTIAL)

Somalia

5. The terms of a credit agreement between Somalia and Communist China for the construction of a national theatre in Mogadishu stipulate that the Somali government is responsible for the local costs involved in the theatre project. A recent report states that the Chinese insisted that these funds be paid directly to them so that they can supervise all aspects of the project. Somalia has refused to accede to the Chinese request and is reported to have issued a warning to the Chinese that they must not interfere with Somalia labour. As a result the theatre project is unlikely to be started for some time. A Chinese offer to establish a rice-growing industry in Somalia has also been shelved.
(SECRET CANUKUS EYES ONLY)

6. Chinese communist economic aid to Somalia was extended in 1963 and is valued at about $20 million. Up to the present time only $2 million has been drawn. (SECRET)

Congo (Brazzaville)

7. North Korea and the Congo(Brazzaville) concluded an agreement recently under which North Korea has undertaken to construct a polytechnical school and a match factory in Brazzaville. North Korea is building the school on a grant basis, but the Congo (Brazzaville) is required to equip it. These are the first projects to be announced under the economic and technical agreements concluded by these countries in January, 1965. (RESTRICTED)

Ghana

8. In December, 1965 Ghana's credit balances on its clearing accounts with Soviet Union and the East European communist countries were estimated to total about $30 million. Some of these balances were reported to be approaching the limits of the "swing" provide for in the respective trade agreements. (CONFIDENTIAL)

THE MIDDLE EAST

UAR

9. The UAR has reviewed the economic feasibility of a number of development projects scheduled for construction under communist economic credits and some have been suspended and others cancelled outright. A recent report states that Egyptian government officials have advised Czechoslovakia that the construction of two sugar refineries to be financed by Czech aid have been suspended indefinitely despite the fact that some of the machinery for the refineries had been manufactured. According to the report the UAR has decided it would be cheaper to import larger quantities of sugar than to grow and process sugar in the UAR. A Polish contract to construct an aluminum plant, at a cost of $19 million, has also been cancelled. This project was being financed under a $40 million Polish loan extended to the UAR at the end of 1965. There are also indications that some projects sponsored by Roumania, and possibly the Soviet Union, may be affected by the UAR's decision.
(CONFIDENTIAL)

10. A new trade agreement was concluded between the UAR and the Soviet Union in December, 1965. The new agreement came into force 1 January, 1966 and provides for a 50 percent increase in trade by 1970. According to Soviet statistics trade between the two countries has increased 69 percent during the past five years. Under the new agreement the Soviet Union will export wheat, machinery, crude oil and lumber in exchange for UAR cotton, rice, textiles and semi-manufactured products.
(UNCLASSIFIED)

11. A recent report from Cairo states that the Soviet Union apparently has written off part of the UAR's indebtedness for military equipment purchased from the Soviet Union during the past ten years. In a speech to the National Assembly President Nasser indicated that this concession was made during his visit to Moscow in August-September 1965.
(UNCLASSIFIED)

12. In December, 1965 the Egyptian Central Bank arranged the payment of the UAR's third instalment on the Soviet loan for the financing of the first stage of the Aswan High Dam. The instalment amounted to about $5,190,000(US). A UAR government official has stated that a balance of about $62 million was still outstanding on 1 January, 1966 and would be paid off in equal instalments ending 1 January, 1975.

13. Soviet aid for the Aswan High Dam project consists of two loans, a $100 million credit extended in November, 1958 for the first stage and a $225 million credit in 1960 for the second stage. It is believed that repayment of the 1960 loan will start in 1975 when the second stage is scheduled to be completed. (UNCLASSIFIED)

Syria

14. The Syrian Ministry of Information has confirmed reports that the Soviet Union is interested in providing aid for the Euphrates Dam which, according to an agreement concluded in 1963, was to be constructed by West Germany at a cost of $87.5 million. Some reports have indicated that technical differences between West Germany and Syria concerning the construction of the dam resulted in West Germany's failure to implement the agreement. In addition, the recent nationalization of a West German oil concession by the Syrian government probably influenced the West German government's decision. (UNCLASSIFIED)

Turkey

15. The government of Turkey has announced its acceptance of a long-term development credit offered by the Soviet Union in August, 1965. The balance of the credit is reported to be about $200 million, repayable over 15 years at 2.5 percent interest. It will be used to finance the construction of nine industrial projects including an iron and steel works, an oil refinery, an aluminum plant and a tractor factory. (CONFIDENTIAL)

Jordan

16. During the second half of 1965 some of the communist countries have attempted to expand their economic relations with Jordan. The Soviet Union is reported to have shown interest in conducting oil exploration in Jordan and, along with Czechoslovakia, is planning to submit a bid on a steel mill to be constructed near Amman. (SECRET)

17. Communist China is interested in expanding its trade with Jordan and has requested negotiations with Jordan concerning the purchase of 200,000 tons of phosphates from Jordan. (SECRET)

Iran

18. Iran and the Soviet Union signed an economic agreement in Moscow on 13 January, 1966, under which the Soviet Union extended Iran a $290 million economic credit repayable over twelve years at 2.5 percent interest. The credit is to be used for the construction of a number of industrial projects including a steel plant, a machine tool factory and for assistance in laying a 620 mile natural gas pipeline from Iranian fields to the Soviet Union. (SECRET)

19. According to a US report the Iranian Oil Company will conduct the survey engineering and the construction of the major section of the pipeline from the southern oil fields to the Teheran Area. Iran is also responsible for obtaining the wide diameter pipe to be used in the project as well as the auxiliary equipment for the project, which is scheduled for completion in 1970. The Soviet credit is to be repaid by Iranian exports of natural gas through the pipeline. (SECRET)

20. Negotiations concerning Soviet aid for the projects specified in the January agreement have been underway for some time and it was expected that the Soviet Union would extend a credit of substantial proportions. The total value of communist aid to Iran is now estimated at $330 million from the Soviet Union and $35 million from the East European communist countries. (SECRET)

ASIA

Pakistan

21. The Soviet Union has increased the value of a $30 million loan extended to Pakistan in April, 1965 to $50 million. The terms of the original credit included repayment over 10 years at 2.5 percent interest and it is likely that the increase is covered by the same terms. Early in January, 1966 a Soviet economic delegation to Pakistan discussed the question of supplying Soviet industrial plants and machinery under the $50 million credit and Pakistani government reportedly provided a list of some 30 medium and small industries for which machinery is required. (UNCLASSIFIED)

22. The Soviet Union and Pakistan have signed a barter agreement for the export of 85,000 tons of Pakistani rice in exchange for Soviet vehicles and machinery. (UNCLASSIFIED)

23. Talks with Chinese officials concerning the utilization of a Chinese loan to Pakistan were held in Pakistan recently and the construction of a paper mill was discussed. China also offered to supply Pakistan with electrical equipment. (UNCLASSIFIED)

24. Poland and Pakistan concluded a new trade agreement in December, 1965. It provides for a substantial increase over present trade, although no figures have been given. Talks were also held about the implementation of the Polish credit offers which total about $14 million. Polish assistance in the development of coal mines in East Pakistan was also discussed and further talks are to be held in Warsaw early in 1966. (UNCLASSIFIED)

Cambodia

25. Cambodia's finance and economics minister had advised against Cambodia accepting a Chinese offer of financial aid to help resolve Cambodia's budget deficit on the grounds that the deficits would continue and would dangerously increase Cambodia's debt to China. The Chinese offer has now been rejected on the grounds that when Prince Sihanouk refused US aid he swore "never to accept money from any country." (SECRET)

LATIN AMERICA

Uruguay

26. According to a report from Montevideo the Soviet Union has proposed to Uruguay that trade relations between them be expanded and that a trade exchange of $30 million on each side be established. In return for supplies of agricultural machinery, oil and raw materials, the Soviet Union proposes taking Uruguay's rice surplus, wool, hides and other traditional and non-traditional Uruguayan exports. In addition, the Soviet Union is reported to have offered Uruguay a five-year credit with interest at 3 percent but the value of the credit was not disclosed.

(UNCLASSIFIED)

Columbia

27. During December, 1965 an East German parliamentary delegation toured Columbia and reportedly discussed the export of complete industrial plants to Columbia. East Germany is Columbia's most important communist trading partner and has already extended commercial credit terms to Columbia for East-German exports.

PART II MILITARY AID

AFRICA

Somalia

28. In recent weeks there has been an increase in the delivery of Soviet arms to Somalia. In mid-December the Soviet freighter PEREKOP, after unloading what was probably a small quantity of arms in Berbera, went on to Mogadiscio and delivered nine mobile radio vans and seven to nine crated aircraft. These were probably MIG-15s and if so would bring the number now delivered (see JAWG Brief 1/66) to 16; they may on the other hand have been MIG-17s and if so would be the first of this type to be delivered. This shipment was followed by the arrival of the freighter FRYAZINO, which is said to have unloaded about 20 BTR-152 armoured personnel carriers, 22 tanks (including 16 T-34s) and radar equipment, in early January. The freighters BAYMAK and BELOZERSKLES arrived later in the month, the former with a cargo reportedly including 2000 tons of ammunition, seven electronic vehicles, eight large open bed trucks and 12 crates said to contain rockets; the latter carried a deck cargo of vehicles, but there is no evidence of these being intended for military use. The IVAN PAVLOV is now en route and has been reported as having a deck cargo of four trucks and 10 large and five small crates, which again may or may not be for military purposes. (SECRET CANUKUS EYES ONLY)

29. According to a recent report the Russians are to supply Somalia with eight MTBs during 1966. The port of Berbera, where new coastal batteries are being installed under Russian supervision, is to be the headquarters of the navy, but some of the boats are to be deployed to other Somali ports. The Russians, who are also helping in the development of Berbera as a commercial port, have found the Somalis difficult colleagues. As no provision has been made for naval expenses in the Somali defence estimates, running expenses have to date been met by the Russian military attaches. About 100 Somalis have to date received some form of naval training in the Soviet Union or UAR and a small Russian naval mission has been at Berbera for the last six months. Two POLUCHAT coastal patrol boats were delivered at Berbera in February 1965, and it seems likely that the craft due this year will also be POLUCHATs, and not MTBs. (SECRET)

Tanzania

30. On 1 December 1965 an East German ship is reported to have unloaded eight 37 mm guns in Zanzibar. A mobile repair workshop for maintenance of motor vehicles, a tanker truck and a bulldozer, all for military authorities, were delivered by a Soviet ship, also in December 1965. (CONFIDENTIAL)

MIDDLE EAST

Cyprus

31. A Canadian report from Cyprus suggests the likelihood that the 150 surface-to-air missiles which are at present stored in Alexandria will be brought to Cyprus in June 1966 and that three missile sites will be established in the summer of 1966. The report also states that the cost of the missiles was approximately $9.8 million (US). The total cost of Soviet equipment supplied to the Greek Cypriots was $14 million (US), a sum which is believed to be a reduction from an original cost of $28 million (US). (SECRET)

ASIA

India

32. According to a British report India contracted in November 1965 to buy 260 tanks - of which 225 were to be T-54A's - from Czechoslovakia, with delivery beginning in December and continuing for six to ten months. Cost of the total contract is $40 million with payment over a ten year period. The report further states that if satisfied with these tanks the Indians will order another 200 later. Most of the current order will come from Czech army reserves and the remainder from current Czech production. The Indians were earlier reported to have expressed interest in purchasing up to 250 T-55's from the USSR but indicated they would turn to the Czechs for T-54's if these were not available.
(SECRET CANUKUS EYES ONLY)

33. Some additional evidence of Czech competition with the Soviet Union in sales of military equipment is provided by a report in mid-December that they intended to make an offer of 50 T-54 tanks to Iraq. They are known to have previously offered MIG-21s in competition with Russian offers for the same type of aircraft. Ten million rounds of small arms ammunition from Czechoslovakia were delivered to Iraq in December.
(SECRET CANUKUS EYES ONLY)

NORTH VIETNAM

34. The despatch of the high level Soviet delegation, led by Shelepin, to the DRV in January was almost certainly in part concerned with the further supply of both military and economic aid. Despite the presence in the delegation of Colonel General Tolubko, deputy chief of the Strategic Rocket Forces, it seems unlikely that offensive missiles would be included in any new Soviet military aid package, but rather that it would consist mainly of more air defence weapons. (SECRET)

JIB(CAN) 4/66

Communist Economic Aid Extensions

January, 1966

(million US$)

By	To	Project Aid	Other Loans	Total
Soviet Union	Iran	290.0		290.0
	Pakistan	20.0		20.0
	*Turkey	33.0		33.0
		343.0		343.0

*The value of the Soviet loan to Turkey in 1965 has been revised upward to $200 million, an increase of $33 million.

SECRET

Copy No 71

JIB(CAN) 5/66

DATE 12 April 1966

JOINT INTELLIGENCE BUREAU
Ottawa

SUMMARY OF ITEMS
OF ECONOMIC AND TOPOGRAPHICAL INTELLIGENCE
FROM CANADIAN SOURCES

March 1966

(Unevaluated Information)

JOINT INTELLIGENCE BUREAU
Department of National Defence
OTTAWA, CANADA

DISTRIBUTION

External Affairs (DL.2)	1 - 2	CIA	48 - 61
DGI (DIA, 20	3 - 36	INR (State Dept)	62 - 63
(NSA via DIA, 5)		Senior Military Advisor	
DGI/DSTI	37	ICCS (Saigon) Indochina	64
CBNRC (Library)	38 - 39	JIB(O)LO(L)	65
DIS via JIB(O)LO(L)	40 - 44	JIB(O)LO(W)	66 - 70
FORD via JIB(O)LO(L)	45	JIB(O)	71
JIB(A)	46 - 47	File	72
		Spares	73 - 77

SECRET

SECRET
JIB(CAN) 5/66

ITEMS OF ECONOMIC & TOPOGRAPHICAL INTELLIGENCE FROM CANADIAN SOURCES

/(ii

The Director JIB (Ottawa) would be grateful for any suggestions or comments that the recipients of this Summary may care to make.

NOTE: High grade prints of photographs in this publication may be obtained, or negatives borrowed, from the Director JIB (Ottawa)

EVALUATIONS

A. Completely reliable
B. Usually reliable
C. Fairly reliable
D. Not usually reliable
E. Not reliable
F. Reliability cannot be judged

1. Confirmed from other sources
2. Probably true
3. Possibly true
4. Doubtful
5. Probably false
6. Truth cannot be judged

/(iii)

CONFIDENTIAL
JIB(CAN) 5/66

I.

TURKEY

TRANSPORTATION - Roads
South Eastern Section,
16-26 June 1965

1. The Canadian Forces Attache and the British Military Attache made a tour of the recently de-restricted south-eastern region of Turkey, 16-26 June 65-- a trip of 2486 miles. Most of the route was through mountainous or very hilly country. The following is a report of the tour.

Roads

2. Generally the roads were found to be the same as those in Northern Ontario, Quebec or New Brunswick of about 25 years ago, i.e., there were some asphalted surfaces but the roads were mainly gravel. While these gravel roads were certainly dusty the surface condition was generally good and often the surfaces were up to 24 feet wide. In many areas the Turkish Roads Department was found to be hard at work re-aligning roads, building new bridges and culverts, widening present alignment and asphalting additional surface. Such work was going on pretty well along the whole route, even on the road from Van to Kakkari. The road from Mersin to Diyarbakir was in particularly good condition because it is along this route that hundreds of tanker trucks travel daily and nightly, bringing out the crude oil from the Batman-Siirt oilfields until the planned pipe-line is built.

Economic Aspects

3. The trees were in full leaf, and this year rain throughout the country made for good water levels and a good crop; this part of the country compared favorably with the apparent economic condition of the western areas of Turkey and many large herds of cattle (some 500 head), and people hard at work in the fields, were seen.

ROAD REPORTS

All references are to Road Map of Turkey 1964, prepared by the General Director of Highways. Unless otherwise stated all distances and measurements are estimated due to close proximity of Turkish Nationals.

Abbreviations used in report:

TSBA	- Total span between abutments
OL	- Overall length
a	- abutments
conc	- concrete
constr	- construction
DP	- diversion problem
NDP	- no diversion problem
C	- carriageway

(SE Turkey road trip
16-26 June 1965)

CONFIDENTIAL
JIB(CAN)5/66

Route followed:

ANKARA - ADANA - GAZIANTEP

GAZIANTEP - URFA

URFA - MARDIN - DIYARBAKIR

DIYARBAKIR - BITLIS - TATVAN

TATVAN - VAN

VAN - HAKKARI

VAN - ERCIS - ADLICEVAZ - TATVAN - MUŞ

MUŞ - BINGOL - ELAZIG

ELAZIG - MALATYA - KAYSERI

KAYSERI - KIRŞEHIR - ANKARA

- - - - - - - - - - -

ANKARA-ADANA-GAZIANTEP

Road Report 16 June 65
Weather: start in sunshine ended in rain storms.
Vehicle: Mercedes with Land Rover following.
Distance: 469 miles

Miles	Item	Remarks
0	Depart ANKARA. Tarmac. Carriageway (C) 24', verge varies from 3' to 6' on either side, shoulders from 3' to 6'	Sunshine
67	ADANA/KONYA road junction. Road badly potholed as result of long and wet winter, but repairs being carried out very slowly.	
88	Road narrows slightly, now surfaced with red earth to raise level above waterlogged area bordering TUZ OLU (Salt Lake) as far as SEREFLIKOÇHISAR - small army camp to right of road.	

(SE Turkey road trip
16-26 June 1965)

CONFIDENTIAL
JIB(CAN) 5/66

Miles	Item	Remarks
99	Tarmac starts again, badly potholed.	(Sunny)
108	Tank firing range on lake side. Eight firing points.	
134	Tarmac in good condition.	
148	Road junction. Left fork to AKSARAY. Tarmac 18' wide.	
150	Concrete bridge over river bed C 21' single-span.	
152	Road rejoins main ANKARA - ADANA road.	
177 to 210	Road runs almost dead straight for 33 miles with only bend at 185. Good condition. Carriageway 24' with verges approximately 3' - 6'. Shoulders 3'.	
218	Concrete railway bridge. TSBA 24'. Single span. Single track.	
222	ULUKIŞLA. Army petrol dump right of road in 45-gallon drums. Stored in open.	
225	Army petrol dump left of road, 45-gallon drums stored in open.	
230-1	Road being resurfaced.	Heavy rain and thunder, low cloud and mist
235	New alignment through Taurus mountains. Tarmac good surface. Carriageway 24', verge nil, shoulders vary 0 - 12 ft. Series of stone and concrete bridges mostly double span, varying between 15'- 30' with single track railway following line of new road. DP eased by old road running alongside new alignment.	
246	Stone and concrete bridge; iron rails. TSBA 50' Three span. Carriageway 24' over YENICE RIVER. Railway bridge stone and concrete over tributary of YENICE. Double span, single track same area.	

(SE Turkey road trip
16-26 June 65)

CONFIDENTIAL

Mile	Topic	Remarks
249	POZANTI - road still good	
250	Pass through Taurus 1268 m	
263	Pass through Taurus GÜLEKBOĞAZI 1050 m.	
265	Flash run-off (after severe thunderstorm) flooding down mountainside, blocked road for 15 minutes. (Road surface will need repair.)	
278	Cleared Taurus mountains. Tarmac in good condition, passes through rocky sparsely cultivated country.	
296	Level crossing. Railway MERSIN-ADANA. Single track, standard gauge on rock bed.	
297	TARSUS-ADANA crossroads through fertile cultivated flat country. ADANA road tarmac in good condition, carriageway 25', verge 3', shoulders vary 1' to 3'	
298	Concrete and stone bridge over river bed. TSBA 15' to 20', carriage way 24'. Parallel on old road concrete-and-stone 3-span reinforced concrete bowstring type bridge over river.	NDP
318	Road deteriorates and narrows entering ADANA. ADANA itself is mainly cobbled streets.	
321	Bridge over river, start of dual carriageway.	
324	Leave ADANA by one of three parallel five-span concrete bridges. TSBA not known. Carriageway 25'	
325	Left stretch of dual carriageway under construction.	
331	Dual carriageway ends at road fork. Left fork developing into new earth road to KIRMIT.	
339	MISIS Town. Nine-span Selçuk bridge, stone and concrete. TSBA 55' to 60', spans nine. Carriageway 12', road thereafter tarmac, good condition. Carriageway 25', verge 3'	

CONFIDENTIAL

(SE Turkey road trip
16-26 June 65)

CONFIDENTIAL
JIB(CAN) 5/66

Mile	Item	Remarks
346	Steel truss railway bridge, 3-span single track.	
349	Level crossing SIRKELLI village and railway stop. Single-span stone and concrete road and railway bridges run parallel to each other. JOKANIS village.	
350	CEYHAN Town starts, road narrows.	
351	CEYHAN Town ends, and road widens to 25' with 3' verges, Tarmac in good condition.	
363	Concrete and stone bridge over tributary of CEYHAN NAHR River - double span	
370	Road Fork GAZIANTEP-ISKENDERUN. Despite map showing poor condition road is excellent.	
373	Road narrows slightly at TOPRAKKALE but is still good. Passes through low hills cultivated close to the road only.	
378	Level crossing	
380	OSMANYIE - dual carriageway	
382	Dual carriageway ends (132 Kms from GAZIANTEP). Rolling country left and rocky mountains on right of road.	
385	Stone and concrete bridge TSBA 30× 3-span. Carriageway 12', surface good over tributary of CEYHAN River	
392	Stone and concrete bridge with iron rail over river bed, TSBA 20×. Single span. Carriageway 12'. Narrow approach necessitating one way traffic only. Road starts to climb steeply, winding; carriageway 12' but with no verge.	Heavy rain and mist continuing
395	Steep drop on right of road - NDP	
396	Road junction. Left fork to BAHCE	
398	Steep climb ends and drop on right of road reduced. Road fairly level, undulating but good. Carriageway 12' with 3' verge on either side.	

(SE Turkey road trip
16-26 June 1965)

CONFIDENTIAL
JIB(CAN)5/66

Mile	Item	Remarks
404	HASANBEYLI village. Road climbs steeply.	
407	ORTAPINAR village	
409	NURDAĞI GEÇIDI 1150 metres. Very steep descent with precipitious drop on right of road for four miles	(Twilight)
423	FEVSIPAŞA village. Railway bridge, stone and concrete, TSBA 20', single-span, single-track. Crossroads ANTAKYA-ISLAHIYE-GAZIANTEP. Road passes through flat countryside.	
424	Level crossing, single track - MARAS-GAZIANTEP junction	
469	GAZIANTEP. Stopped at Güzel Oteli.	

GAZIANTEP - URFA

Road Report 17 June 1965
Weather: Sunshine, dry and cloudy
Vehicle: Mercedes with Land Rover following.
Distance: 98 miles

Note: Locals report road GAZIANTEP-ELBEYLI leading to HALEP (SYRIA), good; ELBEYLI-HALEP motorable but not as good as Turkish part of road

Mile	Item	Remarks
0	Departed GAZIANTEP. Road, tarmac, good condition. Carriageway 21', verges 3', passes through barren low hills covered with rocks where, close to the road, vines and pistaccio trees are cultivated in profusion.	
12	GÜRENIZ village. Road narrows to carriageway 18', verges 2', shoulders 3'	

(SE Turkey road trip
16-26 June 1965)

CONFIDENTIAL
JIB(CAN) 5/66

Mile	Item	Remarks
14	ARIL village. Cultivation of vine and pistaccio extends 1 - 2 miles on either side of road.	
19	BATAL village. Carriageway 8', verges 3/4'; passes through large olive groves.	
22	KEFERCEBEL village	
26	TURLU village. Concrete and stone bridge, TSBA 20×, double span. Carriageway 21', road 18', NDP dry weather. High water in river in winter could cause DP.	
31	NIZIP. No sign of tributary of Firat Nahr (Euphrates) shown on map. Road to CARABLUS reported good.	
42	Reinforced concrete bridge over Firat Nahr (Euphrates) TSBA 330×, Total length of bridge 766×, spans 19 - 13 small over the land and 5 large over the river, 1 small over land.	
43.	BIRECIK Town. Tunnel length 30×, carriageway 18', clearance 3.5 Road climbs out of Birecik; carriageway 25'	
47.	Culvert-bridge over dry wadi. Carriageway narrows to 18' and opens again to 25' following new alignment. Tarmac in good condition.	
55.	ARAT TEPESI 770 metres. Road passes through rolling cornfields.	
75	Road narrows to 18', verge nil. Tarmac still good.	
78-82	Road potholed and undulating, winding sharply through low rock-covered hills.	
86	Narrow culvert over dry wadi. Carriageway 18'	
88	" " " " " " "	
96	Hairpin bends and steep descent to URFA	
97	URFA town	
98	Centre of town.	

(SE Turkey road trip
16-26 June 65)

CONFIDENTIAL
JIB(CAN)5/66

URFA-MARDIN-DIYARBAKIR

Road report 18 June 1965
Weather: Fine and dry
Vehicle: Mercedes followed by Land Rover
Distance: 188 miles

Mile	Item	Remarks
0	Depart URFA on dual carriageway	
1	Road junction. Left fork to DIYARBAKIR, right fork to MARDIN. Followed right fork. Tarmac with worn pebbly surface but potholed repaired. Carriageway 21', verge nil, shoulders 3'; through open rolling country	
11	Road somewhat potholed	
15	Concrete and stone bridge over dry river bed. TSBA 30^{x} double span, carriageway 18'. Road under repair, pot holes filled in (two F.84Fs making diving run over valley to right of road)	
17	Carriageway widens again to 21', verge 3', high shoulders	
29	End of tarmac w.b.m. carriageway still 21', verge nil, slight corrugation	
38	Carriageway 24' w.b.m. good but rather pebbly surface.	
51	Reinforced concrete beam bridge TSBA 75^{x} triple-span. Carriageway 24' over dry watercourse but boggy area. NDP	
59	Concrete and stone bridge. TSBA 30^{x} NDP left of road	
61	VIRANŞEHIR. Loose stone surface on w.b.m. Carriageway 21'- no verge. (Locals report that road into Syria via CEYLANPINAR is as good as main road. Little seen was good.)	
65	Road surface improves. Less loose flint	
67	Reinforced concrete bridge, TSBA 55^{x}/60^{x} over dry river bed. NDP	

(SE Turkey road trip
16-26 June 1965)

CONFIDENTIAL
JIB(CAN) 5/66

Mile	Item	Remarks
70	Same as Mile 67. TSBA 30/35$^{\times}$. NDP	
75	W.b.m. ends, earth road starts and narrows to 16/18', winding sharply down steep descent over 5-pipe culvert of stone and concrete. Carriageway 12', length of culvert 25 - 30$^{\times}$. NDP in dry weather. New reinforced concrete-arch bridge under construction. First span complete but no road. New road alignment obvious.	
76	Road opens up to carriageway of 24', no verge, and w.b.m. starts again. Firm surface. Road passes through rolling corn fields.	
81	Stone and concrete bridge over deep wadi, carriageway 21', double span. TSBA 25/30$^{\times}$. DP	
82	Reinforced concrete bridge, TSBA 15/20$^{\times}$. Carriageway 21', passes over shallow wadi. NDP	
88	Ditto. TSBA 10/12$^{\times}$ single-span. Carriageway 21', passes over shallow wadi. NDP	
90	Pile of oil pipeline, pipes on side of road	
95	Flints piled for road repairs for one mile	
98	Stone and concrete bridge. TSBA 10$^{\times}$ single-span over dry wadi. Road widens to carriageway of 24', verge 6'	
103	Road deteriorates. Slightly corrugated.	
104	Stone and concrete bridge carriageway 21'. Single span. TSBA 12/15$^{\times}$ passes over deep stream.	
105	Road improves	
107	Stone and concrete bridge over dry wadi. NDP. Double span. TSBA 30$^{\times}$. Carriageway 21'	
109	Crossroads MARDIN-KAMIŞLI-ŞENYURT at KIZILTEPE village. Turn left through village.	

(SE Turkey road trip
16-26 June 65)

CONFIDENTIAL
JIB(CAN)5/66

Mile	Item	Remarks
110	Tarmac road. Carriageway 21', verges 3', slightly potholed. Army camp (Engineer Regt., badge White Battlements)	
120	Army camp left of road. Pipe-laying and firing practiced. Camp hutted and tented. Picquets and two strands of barbed wire.	
120	Bridge over dry wadi. Single-span concrete and stone	
121	Road starts to climb. Carriageway 21', good condition; verges 3' either side. Road cut into hillside.	
123	Road junction MARDIN DIYARBAKIR. Took right fork to MARDIN town to check route.	
124	Road narrows; carriageway 18' without verge	
125	Radar station on mountain above KALE (fortress)	
126	MARDIN. Height 1450 metres	
127	Road ends at HQ 22 Gendarmerie Bde bldgs. Retraced route for 4 miles to road junction 695.	
123 (again)	Followed left fork at junction to DIYARBAKIR through barren rocky country. Tarmac road carriageway 18', verge 3' to 6' in places; very twisting, 6-line telegraph poles follow road.	
126	Carriageway increases to 24' with 3' verges	
129	Carriageway narrows to 21', cut into hillside	
130	AHRAKI GEÇISI (Pass) 1,075 metres. Road starts to descend	
134	Bridge over small swift river. TSBA 15× 3-span stone and concrete, long run-in iron rail	
135	SULTAN village in broad fertile valley	
140	GÜRPINAR village	
144	Road junction MAZIDAGI - Sörgoon	
148	Road descends fairly steeply to YUKAVI KONAK	
153	AŞAĞI KONAK	

(SE Turkey road report
16-26 June 1965)

CONFIDENTIAL
JIB(CAN)5/66

Mile	Item	Remarks
158	Road in good condition. Stone and concrete bridge over fairly wide GÖKSE River, single-span. Reinforced concrete bridge over fairly wide KARASU River, 4-span; long, narrow run in to bridge causing single-lane traffic	
174	Reinforced concrete bridge, TSBA 30×, total length 45× carriageway 18'. Road starts to climb. Carriageway 18', verges 3'	
177	Railway bridge (type steel truss) over DICLE River (TIGRIS). Road-bridge over tributary of DICLE River. TSBA 30×, 3-span concrete 21'	
178	Railway bridge over road 3.20 2.50m	
181	Stone-and-concrete-arch road bridge over DICLE River. TSBA 60× paced, 10 spans (irregular, 3 large and 7 small) breakwaters, Cl.30	
182	DIYARBAKIR 660 metres	

DIYARBAKIR-BITLIS-TATVAN

Road report 20 June 1965
Weather: Fine and dry
Vehicle: Mercedes with Land Rover following
Distance: 170 miles

Note: Continuous work by graders over the route made it a tiring drive despite general good condition of roads

Mile	Item	Remarks
0	Departed DIYARBAKIR on tarmac road	
1	Army camp (54 x M47 seen parked)	
2.	Road junction BITLIS-SIIRT-ELAZIG-URFA. Road w.b.m. follows new alignment, 24' carriageway, verge nil, shoulders 6' - 3'. Passes through open rolling country.	

(SE Turkey Road Trip
16-26 June 1965)

CONFIDENTIAL
JIB(CAN)5/66

Mile	Item	Remarks
4.	Road bridge over DICLE (TIGRIS) River. Stone and concrete, TSBA 60× 7-span. Cl 30 br	
9	Tarmac	
10	Detour onto earth road follows new alignment	
12	Detour joins main road	
14	Bridge over ANBAR ÇAYI River, 7 spans irregular, iron rail. Reinforced concrete beam	
15	Road follows new alignment. Heavy dust. Fairly rough w.b.m.	
20	Reinforced concrete beam road bridge with iron rail over dry wadi. Carriageway 18', overall length 35× 9-span. Road leaves new alignment, follows old road. Carriageway 12' with no verge	
23	Road follows new alignment, earth piled on side for new surface. Very dusty	
24	New alignment crosses old road	
27	Stone and concrete bridge over wadi, dry bed of PAMUK ÇAYI River. Carriageway 8', overall length 20× 4-span. TSBA not known. New concrete bridge being erected on new alignment right of road	
32	New reinforced concrete road bridge under construction for new alignment which has not yet reached this point. Three-span. Old reinforced concrete beam road bridge, TSBA 15×, Carriageway 8'; overall length 25×; single-lane traffic; 3-span over river	
38	BASNIK. Left fork to HAZRO. Camp - 43rd Regt 7 Corps	
39	New bridge under construction on new alignment of the same type as Mile 32, 3 spans completed. Old stone and concrete bridge, TSBA 8×, carriageway 8', overall length 10×,2-span. Road continues with carriageway 18'-20', no verge.	
43	ASEO. Stone and concrete bridge, TSBA 10×, carriageway 8' 2-span, single-lane traffic	

(SE Turkey road trip
16-26 June 1965)

CONFIDENTIAL
JIB(CAN)5/66

Mile	Item	Remarks
55	SILVAN. Road narrows to concrete 18'. Stone and concrete single-span bridge over deep wadi. DP. TSBA 24'	
58	Gendarmerie Post. Road starts to climb, low hills left of road, w.b.m. Carriageway 21', no verge	
64	Low hills both sides of road	
66	Road starts descent to DICLE NAHR (TIGRIS River)	
70	MALABADI. Two bridges over BATMAN CAYI, tributary of TIGRIS River, ornate Turkish Bridge and parallel reinforced concrete road bridge with iron rail, single-span, open spandrels, TSBA 50×, carriageway 21', overall length 60× Road climbs away from river through low hilly country well cultivated	
73	Road junction SIIRT. Road junction to ŞELMO OILFIELD 12 km. Tarmac	
76	Road descends to HAYDAR KÖPRÜSÜ, winding sharply following approximate course of river. Surface of loose flint.	
80	BEKIR HAN. Tarmac road. Carriageway 21', verge 3'. (Tarmac confined to village.) Road continues w.b.m. Carriageway 18', no verge, good surface.	
81	Stone and concrete bridge with iron rail, overall length 10×. Single span. Road climbs steadily through foothills.	
87	Stone and concrete bridge over dry wadi. TSBA 10×, carriageway 8'	
88	Stone and concrete bridge over wadi. TSBA 6×, carriageway 12'.	
91	Road climbs steeply through mountains with GOREME type rock formations. Steep drop to right of road.	
92	Road descends, very winding	
94	Culvert, carriageway 8'	
95	Road junction, KOSLUK 3 Km	

(SE Turkey road trip
16-26 June 1965)

CONFIDENTIAL
JIB(CAN)5/66

Mile	Item	Remarks
97	Reinforced concrete arch road bridge with iron rail over PISYER CAYI tributary of DICLE (TIGRIS) River 50' wide here in patches. TSBA 50', carriageway 10' with concrete step of 2' on either side. Overall length 60', single span	
101	Road crosses embankment with steep, deep drop on either side. Diversion problem	
103	Road surface improves, otherwise same as above	
105	Stone and concrete bridge over river. NDP. Single span, low level, narrow run in	
107	Stone and concrete bridge, 4-span. Road climbs. Carriageway 18', verges 3'-6' passing through foothills. Little cultivation	
110	Road descends into more fertile plain. Oil drilling rig right of road.	
115	Stone and concrete bridge. TSBA 25', double span. Overall length 30', carriageway 18' Road junction to SIIRT road cut through hills with sharp descent	
116	High culvert. Double span. Diversion problem	
117	Stone and concrete bridge with long breakwaters on either side. Single span. Road descends steeply, winding sharply	
118	BAYKAN 990 metres	
119	Deep single span culvert, carriageway 12'. NDP	
	" " " " " " "	
120	" " " " " " "	
	Road carriageway varies vetween 12'-18', winding along cliff face above river	
123	Concrete bridge single span, TSBA 8', overall length 10' carriageway 18' over wadi. Road well buttressed with rocks, climbs steeply.	

CONFIDENTIAL

(SE Turkey road report
16-26 June 1965)

CONFIDENTIAL
JIB(CAN)5/66

Mile	Item	Remarks
124	Stone and concrete bridge, no rail. Single span. TSBA 8×, Overall length 20×, carriageway 18' Road narrows to carriageway 16',w.b.m., good surface well built-up in many places with good drainage. Rugged country. Road opens to carriageway 18', no verge; piles of earth on side of road for resurfacing. Concrete bridge high, single-span, no rail, sharp drop on either side of road	
131	Road buttressed to great height on right. DP. Earth covering on w.b.m. as result of graders working. Carriageway 18'	
136	Road crosses culvert, carriageway 12'	
137	Two deep single-arch culverts; carriageway 8'	
138	Road buttressed with stone and concrete walls up to 10' high against land slides	
139	Road descends to valley,following new alignment, widens to 16' - 18', no verge	
143	Concrete bridge, single-span, Selçuk built, carriageway 8' overall length 10×. Road still climbing and winding sharply	
145	Tunnel 3.5m high, 3× long. Road susceptible to rock falls.	
147	Road descends	
148	Road junction SIMEK-HIZAN on right. Selçuk bridge, single span over old road, carriageway 7', overall length 8×	
150	Single span angled bridge over river, overall length 10×	
152	BITLIS 1550 metres. Stone bridge over river TSBA 18×, carriageway 16' , overall length 20×. Cobbled street narrow, single-lane traffic in places.	
153	Selçuk bridge over deep gully and river, carriageway 16' overall length 30×. Army barracks left of rd which follows new alignment	

CONFIDENTIAL

(SE Turkey road report
16-26 June 1965)

CONFIDENTIAL
JIB(CAN)5/66

Mile	Item	Remarks
154	Concrete bridge, single-span over earth fill, built up to 30'. Single line traffic. Diversion problem	
155	(Ditto) Road opens to 18', no verge	
161	Road junction to MUŞ. Road opens to 21', no verge; shoulders 3' - 5' over new alignment	
163	Road follows old alignment. New single track railway crosses road	
164	Road opens to carriageway 24', with varying verge and shoulders	
167	Iron girder bridge crosses double track railway. Carriageway 18'	
168	TATVAN. Road junction AĞRI-VAN	
170	Stop, Denizcelik Hotel.	

TATVAN-VAN

Road report 21 June 1965
Weather: Dry and sunny
Vehicle: Mercedes followed by Land Rover
Distance: 94 miles

Mile	Item	Remarks
0	Departed TATVAN. Tarmac road, carriageway 18', no verge, 3' shoulder left, 6' shoulder right, of road. Road climbs through low foothills. Good condition.	
2	Road descends	
3	Road cut into hillside, steep drop left of road	
4	KUÇUKSU. Level w.b.m., road slightly pot-holed and corrugated	

(SE Turkey road report
16-26 June 1965)

CONFIDENTIAL
JIB(CAN)5/66

Mile	Item	Remarks
6	Gradual ascent	
8	Stone and concrete single-span bridge, TSBA 10×, carriageway 8'	
10	Descends gradually	
14	Road cut into hillside. Steep drop to LAKE VAN on left. Diversion problem	
16	Carriageway 18', no verge. Road leaves lake shore and climbs between low hills	
17	Road widened by grader cutting wide swathes for drainage. Descends into small valley. Well cultivated close to road.	
27	Road carriageway 18', no verge, soft shoulders up to 3'. BIRIKAR (not shown on map), earth road, loose stone surface.	
33	Road climbs steeply and winding, carriageway 16'. Steep drop on right of road but NDP. Carriageway reduced to 12' occasionally but good passing places.	
34	DENIRCI GEÇIDI (pass) 2140 metres. Road descends	
36	Steep drop left of road	
38	Road levels at bottom of valley. Concrete bridge, single-span, carriageway 8'. Junction with new alignment. Concrete bridge, single-span, TSBA 6×, carriageway 21'	
40	ALAÇABUK(not shown on map), road carriageway 12', and winding through village	
41	Starts to climb, very steep and winding	
43	Road levels off, steep drop on right. KUSKUNKIRAN GEÇIDE 2265 metres. Descends very steeply, winding sharply	
49	Road levels off. Stone and concrete single-span bridge. New bridge under construction on diversion, overall length 8×, carriageway 12'	

(SE Turkey road report
16-26 June 65)

CONFIDENTIAL
JIB(CAN)5/66

Mile	Item	Remarks
50	New stone and concrete bridge under construction. Single span, carriageway 16', overall length 20× but new road not yet completed. Old road w.b.m. well graded, 18', no verge	
59	Stone and concrete bridge over stream, single-span	
60	Stone and concrete bridge, overall length 8×, carriageway 9'	
	" " " " " " "	
62	Culvert. Road follows lake side	
67	Road cut into hillside. Sharp drop on left and slight diversion problem	
68	Winds through village, winding carriageway 12'. Descends steeply	
69	Road opens to carriageway 16', no verge. GEVAS 1750 metres. Carriageway 16', soft shoulders	
72	ATALAN (not shown on map) w.b.m. Carriageway 18', no verge, soft shoulders. Good condition	
75	Road carriageway 21', no verge, soft shoulders. Road junction HAKKARI. Followed left fork to VAN. Tarmac, carriageway 18', gravel verges 6'	
76	Concrete bridge, double-span. Carriageway 21'. Overall length 25×	
84	Road under repair. Heavy soil subsidence right of road	
91	VAN Airport away to left of road	
94	VAN. Road junction AĞRI-ÖZALP. Overnight at Nuh Palas Oteli	

CONFIDENTIAL

(SE Turkey road trip
16-26 June 1965)

CONFIDENTIAL
JIB(CAN)5/66

VAN - HAKKARI

Road report 22 June 1965
Weather: Dry and sunny, interspersed with cloud and light showers
Vehicle: Mercedes followed by Land Rover
Distance: 135 miles

Miles	Item	Remarks
0	Departed VAN w.b.m.	
2.	Road junction. Followed left fork to GÜRPINAR. Stabilized gravel, earth surface. Stone and concrete bridge, single-span, TSBA 8', overall length 12'	
3	Carriageway 12' with verges totalling 3'. Rough, road winding and starts to climb fairly steeply	
5	Carriageway 16', no verge	
6	Road descends	
8	Road climbs	
9	Road badly cut up (difficult in rain)	
10	Road descends into valley, sharp drop on left of road	
14	Crossroads VAN-HAKKARI-GORPINAR-GEVAS GÜRPINAR one mile to south and concrete and stone single-span bridge seen in distance. Followed left fork to HAKKARI, w.b.m. 16' no verge, 3' shoulders. Good condition, runs through level valley well cultivated left of road, foothills right of road	
16	Village (not shown on maps). Road carriageway 18'	
22	Carriageway varies between 10' and 16'; 3-line telegraph runs alongside road	
24	Iron bridge, overall length 50'	
26	Stone and concrete bridge, overall length 24', single-span, carriageway 16'. Road varies for two miles between bad and fair.	

(SE Turkey road trip
16-26 June 1965)

CONFIDENTIAL
JIB(CAN)5/66

Mile	Item	Remarks
28	Road climbs steeply, cut in hillside with sharp drop to river left of road	
29	Road descends sharply to river. Stone and concrete bridge, TSBA 8', single-span, carriageway 16', overall length 10'	
30	Road switchbacks before rejoining line of river; 2 X single line telegraph poles follow general line of road	
34	Road climbs, sharp drop right of road. Road forks. Right fork w.b.m. with single telephone wire, leads to unknown village. Continued on left and main road.	
35	Road descends steadily. Three separate telephone lines follow road, one of 3-line, two of 1-line.	
38	HÖSAP. Stone Selçuk bridge over river, 3-span, carriageway 12'. Narrow winding streets vary from 12' to 16' creating DP	
39	Road follows river valley leaving HÖSAP, w.b.m., carriageway 18', no verge	
44	Road climbs steadily and gradually	
45	Sharp drop right of road. Triple telephone line follows road. Single line branches to left	
46	Level road through well cultivated country	
47	Road continues to climb, sharp drop to right of road. Carriageway 18', no verge, 3'-5' shoulders	
48	Road junction. Earth covered road to right of village some 5 miles away	
52	Road starts steep descent. Carriageway 12' to 16' following water course winding sharply through narrow fertile valley between the mountains	
55	Sharp drop to right of road. DP	
58	Carriageway 18' as valley opens up	
60	Single-span culvert over fast flowing tributary of main river.	

(SE Turkey road trip
16-26 June 65)

CONFIDENTIAL
JIB(CAN)5/66

Mile	Item	Remarks
61	Streams break over road in several places. Slight DP in rainy season	
62	Culvert	
63	Culvert, large	
65	Reinforced concrete beam road bridge with iron rail over river. No diversion problem. Overall length 30'	
66	Steep drop left of road which levels off and then starts to climb through open rolling country	
67	Road junction. Left fork gravel to ŞIKEFTI	
70	Steep descent. Stone and concrete single-span culvert over stream. Carriageway 18'	
73	Road climbs and winds sharply. Red earth surface in patches.	
74	BAŞKALE 2400 metres. Carriageway 12' in places. (HOŞAP-BAŞKALE road not nearly as winding as indicated on map) Road starts gradual descent through low rolling foothills sparsely cultivated. Carriageway 18', no verge, shoulders 2' to 3'. Good drainage	
77	Carriageway varies between 16', 18' and 21', and runs dead straight for 5 miles	
80	Triple telephone line follows line of road	
83	Very steep descent to fairly large river in fertile valley. Sharp drop right of road. Diversion problem.	
84	Stone and concrete bridge, no rail, single-span. Alongside is Selçuk bridge just off road, double-span Road climbs and then levels off. Carriageway 18' to 21', no verge. Two telephone lines close to road, one double and one single	
87	Concrete bridge, no rail. Single span. TSBA 15', abutments 10', carriageway 12'	

(SE Turkey road trip
16-26 June 1965)

CONFIDENTIAL
JIB(CAN)5/66

Mile	Item	Remarks
94	Steep descent to river. Stone and concrete bridge, TSBA 15× About 10' over river. Carriageway 8'	
97	Sharp drop left of road. DP	
100	Road winds very sharply (as shown on map) through high gorge cut into rocks of mountainside. Very steep drop to river on left	
102	Landslide country. Large boulders overhand road. Carriageway 16' to 18'. Road junction right to SIVELAN	
105	Road junction left to YÜKSEKOVA (CENTO road). Reinforced concrete-arch road bridge, single span over turbulent river ZAP SUYU. Followed road to HAKKARI, carriageway 16' opening up to 18' as gorge widens.	
113	Rock slide. Single line traffic	
114	Two tele lines follow road, one 4-line and one single	
115	High culvert over wadi	
118	Curved reinforced concrete-beam road bridge, 4-span, iron rail, overall length 30×, carriageway 18'	
123	Road narrows. Single line traffic for short distance.	
127	Road winds very sharply cut into rocky gorge. Steep drop to left of road to River ZAP SUYU. Carriageway varies from 18' to 18' (sic). Road well buttressed but DP	
130	Road junction. Left fork leads to ÇUKURCA close to Iraq frontier. Beam type steel girder and concrete bridge over River SAP SUYU. Overall length 35× (paced). Carriageway 8', single-line traffic only. Rickety wood plank deck, broken iron rail	
131	ÇUKURCA road visible from HAKKARI road running alongside opposite bank of River ZAP SUYU	

CONFIDENTIAL

(SE Turkey road trip
16-26 June 1965)

CONFIDENTIAL
JIB(CAN) 5/66

Mile	Item	Remarks
131	HAKKARI road approaching town of this name, continues winding through precipitous gorge cut into rock and passes through 3 holes blasted through rock, average width 2-3 metres, height 3.5 metres	
	Road well buttressed, carriageway 12' to 18' in most places, but diversion problem	
134	Reinforced concrete road bridge. Single span	
135	HAKKARI 1700 metres. Road continues west from road junction just east of HAKKARI on ÇUKURCA road to new CENTO alignment to ULUDERE, but new road not yet through	

VAN-ERCIŞ-ADILCEVAZ-TATVAN-MUŞ

Road report 23 June 1965
Weather: Dry and sunny
Vehicle: Mercedes followed by Land Rover
Distance: 218 miles

Mile	Item	Remarks
0	Departed MUŞ. Tarmac, solid foundation, carriageway 24' through town to Van ISKELISI (Pier). One ship, MV "Bitlis" alongside	
4	Tarmac ends at culvert. Road w.b.m., carriageway 16' through outskirts of town opening to carriageway 21', no verge, soft shoulders 1'-2'. Passes through open country	
7	Large new road under construction following new alignment (at present a dust bowl), varying carriageway 24' - 36'	
10	New alignment rejoins old road	
12	Diversion. Gravel road carriageway 16', verge 2'	

(SE Turkey road trip
16-26 June 1965)

CONFIDENTIAL
JIB(CAN)5/66

Mile	Item	Remarks
14	Rejoins old road at junction. Followed left fork down old road still being improved in places; w.b.m. 24' no verges through open rolling country	
17	Stone and concrete bridge over river. Overall length 50'	
19	Road carriageway 16' for one mile	
20	Road carriageway 18', no verge; winding but good surface	
24	GÖLLU	
29	ŞAHGELDI	
31	Road junction. Left fork to LAKE VAN; followed right fork	
32	Culvert over stream. Slight diversion problem in winter	
36	TIMAR	
41	Concrete and stone bridge (large culvert type), carriageway 12'	
45 & 47	(Same as 41)	
52	Road junction AGRI-MURADIYI, w.b.m., carriageway 24', good surface Stone and concrete bridge over river flowing into lake, 3-span, overall length 50', carriageway 21' with long stone breakwaters to control river	
54	Road carriageway 18', no verge	
56	Stone culvert carriageway 24', no verge. Dead straight road	
66	Large culvert under earth and rock fill over shallow swift-flowing river. Carriageway 20'	
67	Carriageway 18', no verge; w.b.m., rough surface and winding road.	

(SE Turkey road trip
16-26 June 1965)

CONFIDENTIAL
JIB(CAN)5/66

Mile	Item	Remarks
71	Road junction with Route 95 and AĞRI. Followed coast road through ERCIŞ. Cobbled winding streets	
74	Army camp including possible small airstrip. Road stabilized gravel, carriageway 18'	
75	Stone and concrete culvert over deep stream. Wooden beams over 2 iron girders on concrete pillars. Overall length 5', carriageway 8', slight DP	
76	Stone and concrete culvert over stream. Stone and concrete bridge over wide shallow river, 3-span. Overall length 20'.	
80	Road climbs steeply through chalky hillside with sharp drop to right of road. Carriageway 18' but with surface improved.	
92	Good chalk surface, ends; and road deteriorates slightly -	
104	W.b.m., good surface, carriageway 24', no verge	
108	Carriageway narrows to 18' - 21'	
111	Small village, no name	
115	Road narrows to carriageway 12' - 14', passing through banks of grey dust for about ½ mile. Culvert over stream. No DP	
116	ADILCEVAZ 1760 metres. Cobbled streets narrow through village, carriageway 18'	
117	Leave ADILCEVAZ, road stabilized gravel, rough surface. Carriageway 18', no verge, cut in hillside with sharp drop to lake on left	
118	Road climbs steeply, well buttressed with stones and concrete. Carriageway 16'-19', diversion problem	
119	Road well buttressed	
120	Road descends to lake level	
121	Carriageway opens to 21'	

CONFIDENTIAL

(SE Turkey road trip
16-26 June 1965)

CONFIDENTIAL
JIB(CAN)5/66

Mile	Item	Remarks
124	Diversion over dry wadi, round culvert under construction	
129	Stone and concrete bridge, no rail, over dry wadi. Single span. Overall length 7×. Road carriageway opens to 24'. Work on new surface being carried out.	
131	Carriageway narrows to 18' entering AHLAT	
133	Culvert.	
135	Carriageway 24'	
137	Culvert. Carriageway 18', soft shoulders 3'	
138	Stone and concrete bridge, overall length 20×, TSBA 16 double-span	
139	Road junction PURHUS-TATVAN. Four culverts, large, over stretch of 1 mile. Good surface; carriageway 24'	
147	Culvert. Carriageway 21', Road carriageway 21', no verge. Shoulders vary between 8' - 9'	
152	Carriageway 18'	
159	Stone and concrete bridge with iron rail over railway, overall length 30×, carriageway 21'	
161	TATVAN - site of proposed VAN Railway ferry	
162	Steel road bridge over railway, double track	
163	Road junction BITLIS-MUŞ. Followed left fork to MUŞ. Stabilized gravel, carriageway 24', good condition, recently improved.	
164	Road junction. Followed right fork to MUŞ, w.b.m., raised approximately 18', no verge. Dead straight for 2 miles, carriageway 24'	
165	Railway runs close to road. Well-drained and supported by good build-up and numerous culverts	
175 - 176	Snow sheds over railway	

(SE Turkey road trip
16-26 June 1965)

CONFIDENTIAL
JIB(CAN)5/66

Mile	Item	Remarks
179	Road descends to valley of MURAT River	
184	ÇUKUR village. Rough surface for 1 mile	
192	Stone and concrete bridge over stream, tributary of MURAT River. Overall length 15×, carriageway 16', single span	
194 - 197	Large culvert bridges, overall lengths 7×, carriageways 21'	
200	Stone and concrete bridge over deep river bed. Overall length 35×, carriageway 18', double span	
205	Stone and concrete bridge, overall length 15'. Parallel railway bridge	
215 - 216	Stone and concrete road bridges. Parallel railway bridges. Slight diversion problem at all bridges.	
217	Crossroads. Followed left fork. Carriageway 36'	
218	MUŞ 1520 metres. Road narrows, carriageway 24'	

MUŞ-BINGOL-ELAZIG

Road report 24 June 1965
Weather: Fine and dry
Vehicle: Mercedes followed by Land Rover
Distance: 177 miles

Mile	Item	Remarks
0	Departed MUŞ	
1	Crossroads ERZERUM-BINGOL-BITLIS; w.b.m., carriageway 21' no verge through open rolling country	
3	Level crossing	

(SE Turkey road trip
16-26 June 1965)

CONFIDENTIAL
JIB(CAN)5/66

Mile	Item	Remarks
4	One mile of rough, loose surface. Stone and concrete bridge over KARAŞ River. TSBA 56' (paced), carriageway 16'	
8	Road under repair. Earth and rock build-up to 6' in places. Thick layer of large flints on surface. Steep shoulders	
9	Loose earth surface. Thick dust	
10	Reinforced concrete beam road bridge over MURAT River. TSBA 65' (paced), 6-span, overall length 75'	
13	W.b.m. with smooth surface. Well built up to 6' in places. Steep shoulders	
17	Loose flint and earth covering in progress. Large bridge culvert over dry wadi.	
21	Surface of pressed earth ready for final dressing	
22	Road reverts to firmly packed flint and stone	
23	Stone and concrete bridge over dry river bed. Overall length 10', single-span, carriageway 16'	
26	Road narrows to 18' including small verge	
28	Carriageway 16' due to piles of flint. Road, earth surface. Verge varies 1'-2'	
33	BUĞLAN GEÇIDI (pass) 1670 metres. Flints piled, reducing carriageway to 16'	
35	Road junction. Newly surfaced/graded, earth road joins from right	
36	Stone and concrete bridge. Overall length 10', carriageway 16'. Single span. Flint piles cease, carriageway 18'	
37	Carriageway 12', verge 4' - 6' in places	
38	High culvert over wadi. SOLMAN village at foot of pass. Road runs through plain well-cultivated, up to foothills. Carriageway 18', verge 1' - 2', smooth surface.	

(SE Turkey road trip
16-26 June 1965)

CONFIDENTIAL
JIB(CAN)5/66

Mile	Item	Remarks
39	Stone and concrete bridge over stream. Overall length 15'. Single span. Carriageway 21' - 24'. No verge	
43	Carriageway 18', through rolling foothills	
44	Descends steadily to river passing through rocky canyon	
46	Very large culvert, 2-span with flanking breakwaters extending for 20'. Road switchback, but climbs steadily for 7 miles through cutting in hillside and over saddle. Hillside falls away sharply to left of road. Road winds sharply	
53	SEREFETTIN GEÇIDI, 152 metres. Road descends. Carriageway 21'. Large-flint surface	
55	Road carriageway narrows to 18' due to large flint piles	
62	FARHAN road junction. Loose stone surface	
69	Reinforced concrete beam road bridge over wide river bed of GOYNUK ÇAYI, overall length 75', carriageway 21', 5-span, iron rail with solid breakwater at abutments base, w.b.m. good surface	
70	Road junction KARILOVA. High culvert 30'	
73	Stone and concrete bridge over river bed. Overall length 35', carriageway 18', 3-span. Road continues at carriageway 18'	
74	Road junction BINGOL, left fork. Carried out recconnaisance. Road built up to 30' in places, carriageway 12' caused by piles of flint	
75	Stone and concrete bridge with iron rail, overall length 35' double-span	
77	Artillery camp left and right of DIYARBAKIR road, 2 btys of Quads (40/50 mm bofors) seen parked	
78	BINGOL, new town. Road descends for ¼ mile to old town. Carriageway 24', surface of giant flint, loose, obviously newly laid. Cobbled winding street in old town	

(SE Turkey road trip
16-26 June 1965)

CONFIDENTIAL
JIB(CAN)5/66

Mile	Item	Remarks
79	Stone and concrete bridge over stream. Overall length 20', carriageway 8', double-span. Road climbs steeply	
80	Rejoins tarmac road to ELAZIG	
81	High culvert over deep wadi, carriageway 12'	
82	Road cut in mountainside, V, deep almost vertical drop to right of road, 2/300'	
83	Earth and rock fill approximately 100'; diversion problem Road climbs steadily	
84	Road levels off	
85	Road descends	
86	Concrete and stone bridge over stream, overall length 25' Carriageway 18', double span. Road narrows to carriageway 18', verges 2'	
89	Good tarmac surface. Road starts to climb gradually through rocky scrub-covered foothills	
92	Road junction KIGI	
94	KURULA village	
96	KURUCA GEÇIDI (pass) 1860 metres. Road descends steeply through more open country	
100	W.b.m. rough, pot-holed loose surface	
102	Surface improves	
106	Road good. Passes through wide open plain. Carriageway 21', verges 2'-3'	
108	Road junction KARAÇOR. Stone and concrete bridge, iron rail, overall length 20', carriageway 18' double-span	
109	Tarmac surface - road switchbacks. Carriageway 21', verge 1' - 2'	

(SE Turkey road trip
16-26 June 1965)

CONFIDENTIAL
JIB(CAN)5/66

Mile	Item	Remarks
116	LAHAN village	
117	Reinforced concrete-arch road bridge over wide, almost dry river bed. TSBA 50' (paced), overall length 60' carriageway 21'	
121	W.b.m. Fair surface alternating with tarmac for three miles, carriageway 21'	
124	Straight tarmac through cultivated plain	
128	KOVANCILAR village	
	Road junction left to PALU	
129	High culvert	
	Road climbs and switchbacks for 3 miles through well-cultivated wide rolling valley	
132	Road junction, to right KARAÇOR. Road descends and carriageway narrows to 18', no verge	
133	High culvert, overall length (paced) 200 Level crossing	
138	Reinforced concrete bowstring road bridge over MURAT River, built 1938, 5 spans arched, TSBA 50', carriageway 18'. Parallel up-stream double-span railway bridge carrying single line, steel truss through type.	
145	Carriageway 21', good surface, small verge	
151	IKIZDEMIR village, carriageway 24'	
153	HAMAMPINAR	
155	Girder/trestle railway bridge right of road carrying single line - single-span (same as at Mile 138) Road bridge stone and concrete, overall length 35', carriageway 18', double span	
156	Level crossing. Road 18' - 21' with 1' verge. Good tarmac	

(SE Turkey road trip
16-26 June 1965)

CONFIDENTIAL
JIB(CAN)5/66

Mile	Item	Remarks
(156)		
	PERCENS	
166	Road junction SIVRICE-DIYARBAKIR-ELAZIG	
167	ELAZIG 1020 metres. Spillway, concrete bridge	
168	Road junction to HARPUT. Concrete railway bridge over GÜLMEZ T. GEÇIDI 1315 metres	
170	Army Engineers camp, plus several other units. (Type ?)boat equipment seen. Badge on gate is guided missile over crossed cannon. Carriageway 18', steep winding climb	
173	HARPUT	
177	Return by same route to PALAS OTELI	

ELAZIG-MALATYA-KAYSERI

Road report 25 June 1965
Weather: Dry and sunny
Vehicle: Mercedes followed by Land Rover
Distance: 293 miles

Miles	Item	Remarks
0	Departed ALAZIG. Road tarmac, carriageway 18', good condition	
1	Road junction to KEBAN through wide fertile valley and low foothills. Carriageway 18' with 6' verge	
6	Road junction to village	
7	Verge reduced to 1' - 2'	
8	Carriageway 21', no verge	

CONFIDENTIAL

(SE Turkey road trip
16-26 June 65)

CONFIDENTIAL
JIB(CAN)5/66

Mile	Item	Remarks
10	Verge increases to 6' following new alignment. Wide gradual sloping shoulders.	
11	Carriageway 18' through open rolling farm land	
12	HANKENDI. Narrow twisting street for approximately 1 mile, then road opens to carriageway 18', no verge	
14	Level crossing, single track	
16	Road-fill up to 30' still on new alignment. Good tarmac surface	
17	NALDOKEN GEÇIDI (top of pass)	
19	Descending road narrows to 16', small verge alongside new alignment under construction. Radar post (US) on peak, right of road	
21	Culvert bridge road carriageway 18' again	
22	Road surface gravel and narrows slightly. New alignment runs parallel to old	
23	Rejoin w.b.m. new alignment carriageway 30'	
24	Carriageway 24'	
25	Rejoin old road. Carriageway 18', small verge	
26	Many new culverts already completed showing planned new alignment. No road connection yet. Old road still in use, winds sharply during descent	
28	Enter hilly section, rounded stony hills. Carriageway 24', loose flint surface	
29	Stone and concrete bridge, carriageway 18', single-span. Stone and concrete bridge overall length 20', carriageway 14', single-span. New concrete bridge under construction on new alignment. Old road starts to climb.	

CONFIDENTIAL

(SE Turkey road trip
16-26 June 1965)

CONFIDENTIAL
JIB(CAN)5/66

Mile	Item	Remarks
30	KAMUR HAN 900 metres Road descends steeply, winding sharply but well drained	
33	Very high single-span reinforced concrete-arch road bridge over FIRAT NEHRI (Euphrates), overall length 170×, carriageway 14', TSBA 120× (paced)	
34	Road narrows for short space over 3 culverts, average carriageway 18'. Starts to climb	
36	Tarmac surface, carriageway 14'-18', no verge, through fertile valley	
38	Stone and concrete bridge with iron rail over stream, TSBA 25×, overall length 35×, carriageway 14', 3-span	
40	Stone and concrete bridge over stream, overall length 10× carriageway 16', 2-span, iron rail	
49	Concrete and stone bridge over stream. Iron rail, overall length 60×, carriageway 16', 5-span Road starts climb, varying carriageway 18'-21'	
50 - 51	Culvert over dry wadi	
52	Road narrows for 300× due to flash flood damage	
54	Undulating descent to valley through cultivation. Carriageway 18',well repaired	
55	Carriageway 21'	
56	Road junction	
57	Concrete bridge over river bed, overall length 40× Carriageway 18'	
58	Small concrete bridge overall length 7×, Carriageway 18', single-span with iron rail Road climbs. Carriageway 21'. Excellent surface.	
62	Road starts descent into MALATYA, undulating	

(SE Turkey road trip
16-26 June 1965)

CONFIDENTIAL
JIB(CAN)5/66

Mile	Item	Remarks
63	Outskirts of MALATYA. Army camp	
65	MALATYA. Centre of town 900 metres	
68	Departed MALATYA. Tarmac, carriageway 18', verge 6'	
70	Concrete bridge, built for carriageway 24', with iron rail. Carriageway 12' only, in use. Overall length 10' single-span. New alignment planned to use second half of bridge. Iron rail	
71	Carriageway 18', no verge, through open rolling country	
72	Stone and concrete bridge, over single-track railway, overall length 10', carriageway 14' Road descends steeply with steep drop of several hundred feet to river valley right of road. Carriageway 18', with verge 3'	
73	Stone and concrete bridge over river, TSBA 30', overall length 40', carriageway 14', 6-span Road climbs. Steep sharp drop right of road	
74	Road junction to airfield. Road w.b.m. through open country, carriageway 21', no verge. Stone and concrete bridge over railway, overall length 7'	
76	Air Force ammunition dump	
79	Road junction MARAŞ, right fork KAYSERI, w.b.m. carriageway 24' - 36', no verge	
80	Bridge over railway, overall length 20', carriageway 18' single-span. Road descends sharply	
83	Stone and concrete bridge over river, overall length 15' carriageway 21'. Road levels off and runs almost dead straight for 5 miles	
	SUFTAN SUYU HARASI Animal Breeding Centre	
85	Road junction AKCADAĞ	
88	Road climbs, dusty surface, carriageway 24' including small verge	

CONFIDENTIAL

(SE Turkey road trip
16-26)

CONFIDENTIAL
JIB(CAN)5/66

Mile	Item	Remarks
90	Carriageway 21' including verge for short stretch. W.b.m. with red earth covering	
91	Carriageway 24'	
94	Winding sharp steep descent. Steep drop to river right of road	
95	Carriageway 21' again	
96	"Fill" over deep culvert. Carriageway 21'-24', no verge. Undulating and climbing through arid hills. Road buttressed stone and concrete in many places. Sharp drop left of road	
103	KAHARAN GEÇIDI 1815 metres. W.b.m. red earth covering, carriageway 28'-24', starts descent	
106	Earth fill over culvert raised to 30'. Road climbs through rolling hills but cultivated countryside	
108	Earth falls, narrow carriageway for about 100x. Surface deteriorates	
111	Earth falls again, narrow carriageway for about 100x. Road climbs.	
112	Road descends to stone and concrete bridge over river, overall length 15x, carriageway 18', single span, passes through barren rocky mountain range	
113	Earth fall	
116	SETREK GEÇIDI 1740 metres Road narrows, w.b.m., carriageway 21', fine grey flint covering	
117	Big earth fill. Diversion problem. Road cut into mountainside, sharp drop left of road. Well buttressed, rough surface, varying carriageway 21'-24'	
124 - 126	Large Arab villages in fertile cultivated open rolling country.	
128	Stone and concrete bridge over wadi, overall length 20x, carriageway 18', 3-span pillar type. Road carriageway 24'-26'	

CONFIDENTIAL

(SE Turkey road trip
16-26 June 65)

CONFIDENTIAL
JIB(CAN)5/66

Mile	Item	Remarks
131	W.b.m. with chalky surface. Large piles of flint reduce carriageway to 21'	
132	Stone and concrete bridge over swift-flowing TOHMA ÇAYI, overall length 15×, carriageway 21', double-span	
133	Tarmac, carriageway 21'. DARENDE 985 metres	
138	Village DARENDE ends. Concrete culvert bridge over deep stream, double-span. Road carriageway 21'-24', climbs through arid, dusty mountains, winding sharply	
143	Oil rig on right of road. Road descends through sparsely cultivated area	
149	Stone and concrete bridge over big dry wadi, overall length 15×, carriageway 18'	
	Village, an oasis of green in sparsely cultivated area	
150	Village forms a green belt along the banks of tributary of River MURAT	
155	Large culvert bridge	
157	Valley ends and road climbs through barren hills	
158	Overpass crosses road	
160	Road junction SIVAS-KAYSERI GURUN village spread over 2 miles	
161	Concrete bridge. Road climbs into barren round-topped hills	
170	MAZIKIRAM 1800 metres	
173	Road descends to fertile narrow valley. Slightly pot-holed	
174	Large culvert bridge. Road climbs steadily and gradually between barren hills. Carriageway 21', verge 1'+ 1'	

(SE Turkey road trip
16-26 June 1965).

CONFIDENTIAL
JIB(CAN)5/66

Mile	Item	Remarks
186	Road descends gradually	
188	Surface badly rutted	
189	ZIVARET TEPESI 1950 metres (hilltop) Carriageway 24', no verge. Stone snow fences, some 3' high, 18' wide and 100' long, spread liberally alongside the road.	
196	Road dead straight for 7 miles through wide open rolling countryside on right, foothills to left. Badly pot-holed in places. Carriageway 18' no verges, to 18' with 6' verge	
202	Road junction KAYSERI-VIVANŞEHIR. Snow fences continue	
208	Road runs straight through miles of rolling country on both sides	
210	Road descends sharply. Carriageway 18', 1' verge	
214	Climbs gradually	
217	Descends sharply	
220	Deep culvert bridge over swampy area	
226	Road junction right to KAYNAR village. Carriageway 12' plus 2', 2' verge. Under repair but badly pot-holed through PIANARBAŞI. Stone and concrete bridge over river, overall length 40×, carriageway 14'	
227	Carriageway 18', 2' verge. Stone and concrete bridge with iron rail over river. Road climbs	
228	Communications station on peak, right of road (US)	
231	Carriageway 16', verge 3', rough surface	
233	Road descends following course of river valley, carriageway 18', verges 3'+ 3' to 6'+ 6'	
236	Concrete bridge over river, overall length 30×. Carriageway 18'. Single span. Diversion follows old w.b.m. road; carriageway 18', no verge. New alignment runs almost parallel to left.	

(SE Turkey road trip
16-26 June 1965)

CONFIDENTIAL
JIB(CAN)5/66

Mile	Item	Remarks
241	Road narrows over culvert	
242	PAZARVIRAN (not spelt PAZAÖREN as on map)	
247	Road rejoins new alignment w.b.m., carriageway 24', no verge, earth surface	
249	Village KUPRU BASI. Wood bridge over river, overall length 25', carriageway 14', 8-span	
250	Carriageway 12', verge of 2' + 2'	
251	Straight road, carriageway 18', chalky surface w.b.m., no verge through open rolling country	
254	Road junction ELBASI. Graders have cut wide drainage slopes on both sides of main road	
257	Carriageway 21', no verge. Stone and concrete bridge with iron rail, overall length 7', carriageway 14'	
259	Road very winding, carriageway 18' with verges 1'= 1'(sic)	
267	BUNYAN 1275 metres Wood bridge over river, overall length 21', carriageway 12'	
271	Diversion round new stone and concrete bridge under construction to replace current wood bridge. Road w.b.m. through open rolling country. Carriageway 18', verges 1' + 1' in good condition	
274	Culvert over narrow but deep stream bed	
278	Road junction SIVAS to right. Take left turn. New tarmac carriageway 21', verges 2' + 3'	
280	Road junction FELAHIYI on right	
283	Army ammunition dump in open and dug in in hillside. Guarded. Load carrier serial No. 70838	
293	KAYSERI 1043 metres	

CONFIDENTIAL

(SE Turkey road trip
16-26 June 1965)

CONFIDENTIAL
JIB(CAN)5/66

KAYSERI-KIRSEHIR-ANKARA

Road report 26 June 1965
Weather: Dry and sunny
Vehicle: Mercedes followed by Land Rover
Distance: 211 miles

Mile	Item	Remarks
0	Depart KAYSERI. Tarmac dual carriageway starting 21' reducing to 18', with verges 3'+ 3' in fair condition, passing through flat cultivated countryside	
10	Countryside still cultivated along river but barren, stony hills on left of road. Concrete bridge over stream overall length 25x, carriageway 18', single-span.	
	Concrete bridge over river, overall length 50x, carriageway 18', triple-span	
11	Road junction NĞIDE-NEVSEHIR to left. Tarmac surface improved. Road passes through wide open cultivated plain	
18	Carriageway 21', verges 3'+ 5'	
21	Stone and concrete bridge over stream, overall length 20x, carriageway 18', single-span Stone and concrete bridge over river, overall length 75x, carriageway 21', 5 pillars Parallel to road, iron railway bridge, triple-span	
23	Road narrows, carriageway 18' with verge 3'+ 5', starts climbing, winding steadily. Fair drop on right of road but NDP	
24	Road descends gradually. Carriageway 21', verges 3'+ 5', road raised up to 3'-4'. Good cultivation both sides of road.	
28	Winds through table-topped rocky hills on new alignment, alongside old road	

CONFIDENTIAL

(SE Turkey road trip
16-26 June 1965)

CONFIDENTIAL
JIB(CAN)5/66

Mile	Item	Remarks
29	HIMMETDEDE village. Stone and concrete bridge of single-track railway. Overall length 20'. Road junction BAGAZLIYAN to right	
31	High concrete bridge over railway, overall length 20', single-span. Start of vast wide open plain stretching for 30 miles. Road excellent tarmac	
35	KALABA, road junction to AVANOS. Road climbs gradually	
39	Tarmac excellent condition	
41	Road descends to TOPRAKALI. Small stone and concrete bridge over dry stream, overall length 10', carriageway 18', single-span	
62	YENIYAPAN	
66	Hills close in on road slightly and plain gives way to more undulating country not so heavily cultivated	
69	Road junction left to HACIBEKTAS-NEVSEHIR. Road narrows, carriageway 18', verges 3'+ 3', tarmac in fair condition	
	MUCUR	
77	Road passes over earth fill approximately 3' high, carriageway 18', verges 3'+ 5'	
78	Widens, carriageway 21', verges 3'+ 3', good surface, road well built-up and buttressed across gullies. Undulating and descends gradually	
84	Road junction, right to YOZGAT	
87	KIRSEHIR 925 metres	
88	Hills close in on road, carriageway 21', verges 1'+ 1'	
89	Tarmac fairly rough, carriageway 18', verges 1'+ 1'	
101	End of tarmac. Road w.b.m. with red earth surface. Carriageway 21'- 24'; no verge and slightly corrugated. Passes through cultivated plain with foothills one mile away on left, 2)5 (sic) on right	
107	Carriageway narrows to 18' on entering SOFLAR. Stone and concrete bridge over river. Single span	

(SE Turkey road trip
16-26 June 1965)

CONFIDENTIAL
JIB(CAN)5/66

Mile	Item	Remarks
109	Starts to climb. Stone snow fences of varying length erected over 3 miles indicating winter problem	
112	Road junction right AKPINAR. Road descends. Stone arch bridge over river bed, overall length 10, carriageway 16', double-span	
121	KAMAN - cobble street	
122	Road w.b.m., carriageway 18', no verge. Narrows slightly over many culverts on undulating winding road. Still descending	
130	Stone and concrete bridge over deep stream bed. Single-span. KARAKAYA Dusty road winds through low rolling hills well cultivated and starts to climb	
132	Road junction left to HIRFANLI Barrage	
136	Small stone bridge over stream, overall length 20' carriageway 16', single-span. Two snow paling fences over one mile stretch right of road	
137	Crossroads. Right KESKIN, left CELEBI. W.b.m. 21', no verge	
139	Square concrete culvert bridge, overall length 20', carriageway 18'. Road descends steeply to KIZILIRMAK River. Concrete bridge over wadi, overall length 20', carriageway 16', single-span	
141	Carriageway 21', no verge	
142	Carriageway 18', no verge	
146	Selcuk stone bridge over KIZILIRMAK River. TSBA 100' (paced), 12 spans of varying size with one main span to take summer waters and three smaller spans above to take winter floods. Diversion problem. Overall length 120', carriageway 16' (paced)	

CONFIDENTIAL

(SE Turkey road trip
16-26 June 1965)

CONFIDENTIAL
JIB(CAN)5/66

Mile	Item	Remarks
148	Square concrete culvert bridge over stream, overall length 21', carriageway 16'. Road climbs	
150	Descends briefly, then steady climb	
154	Outsize culvert	
158	Starts climb again steeply. Stone and concrete bridge over wadi, overall length 10", carriageway 16', single-span. Road carriageway 21', no verge	
164	Road descends sharply, winding through rolling foothills	
165	W.b.m. Carriageway 21', no verge	
166	BALA. Cobbled streets. Road descends sharply, carriageway varies from 18' - 21', no verge and winds sharply through well cultivated rolling countryside	
171	W.b.m., carriageway 24', no verge	
172	Road runs level for 7 miles	
179	Starts climb, carriageway varies from 18' to 21'	
181	Stone and concrete bridge with iron rail over stream. Overall length 18", carriageway 14', single-span Culverts cause road to narrow to carriageway 16' in places	
185	Descends	
186	BEYNAM Carriageway varies 21' to 24', no verge, w.b.m.	
188	Concrete bridge overall length 20", carriageway 12'	
190	ÖGULBEY. Carriageway 21', no verge, w.b.m.	
192	Tarmac in good condition, carriageway 18', verges 3'-4' Road junction ANKARA-ADANA-KAYSERI	

CONFIDENTIAL

(SE Turkey road trip
16-26 June 1965)

CONFIDENTIAL
JIB(CAN)5/66

Mile	Trip	Remarks
209	ATATÜRK BULVARI	
211	Arrived home	

Reports & Dates: TIR 15/65 of 15 June 65
TIR 15/66 of 21 March 66

Source: CFA/Ankara

CONFIDENTIAL

SECRET
JIB(CAN)5/66

II. POLAND

SHIPPING - Merships
Visit, K.I. GALCZYNSKI
Halifax, 18-31 Jan 66

1. The Polish mership K.I. GALCZYNSKI (callsign SPTY, 5584.17 GT) was towed to Halifax by the salvage tug FOUNDATION VIGILANT, arriving at 2030Z hours on 18 January 1966 and departing under tow by the same tug at 1715Z hours on 31 January.

Personalities on Board

2. The Captain served in the troop ship BATORY during World War II and was decorated:

Name:	FRANSCISZEK SZUDZINSKI
Height:	5' 9"
Weight:	195 lbs
Hair:	Black, streaked with gray
Eyes:	Brown
Complexion:	Dark
Teeth:	Upper teeth, left back, gold
English:	Good

Date of Report: 14 Feb 66
Source: DGI/INT S

SECRET

SECRET
JIB(CAN) 5/66

III. POLAND

SHIPPING - Electronic Reports
Mership K.I. GANSZYNSKI,
Halifax, January 1966

1. The Polish mership K.I. GANSZYNSKI was inspected at Halifax on 19 January, 1966. Her callsign is SPTY; port of registry, GDYNIA; tonnage 3044 net, 5584 gross; two radio operators carried; safety radio certificate expires September 30, 1966.

Date of Report: 14 Feb 66
Source: DGI/INT S

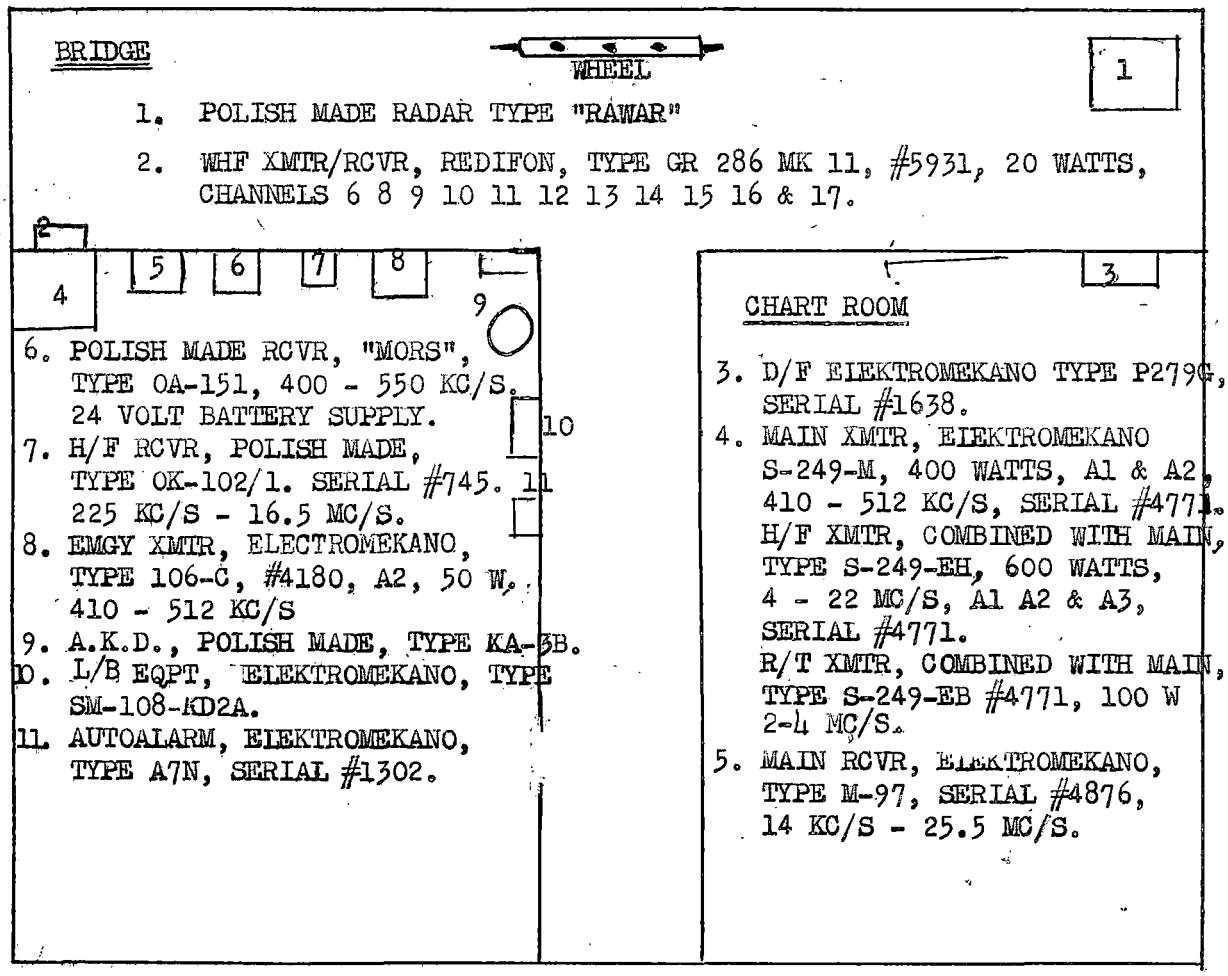

(Mership K.I. GANSZYNSKI
electronic report, Jan.66)

VISUAL INSPECTION - ANTENNA SYSTEM

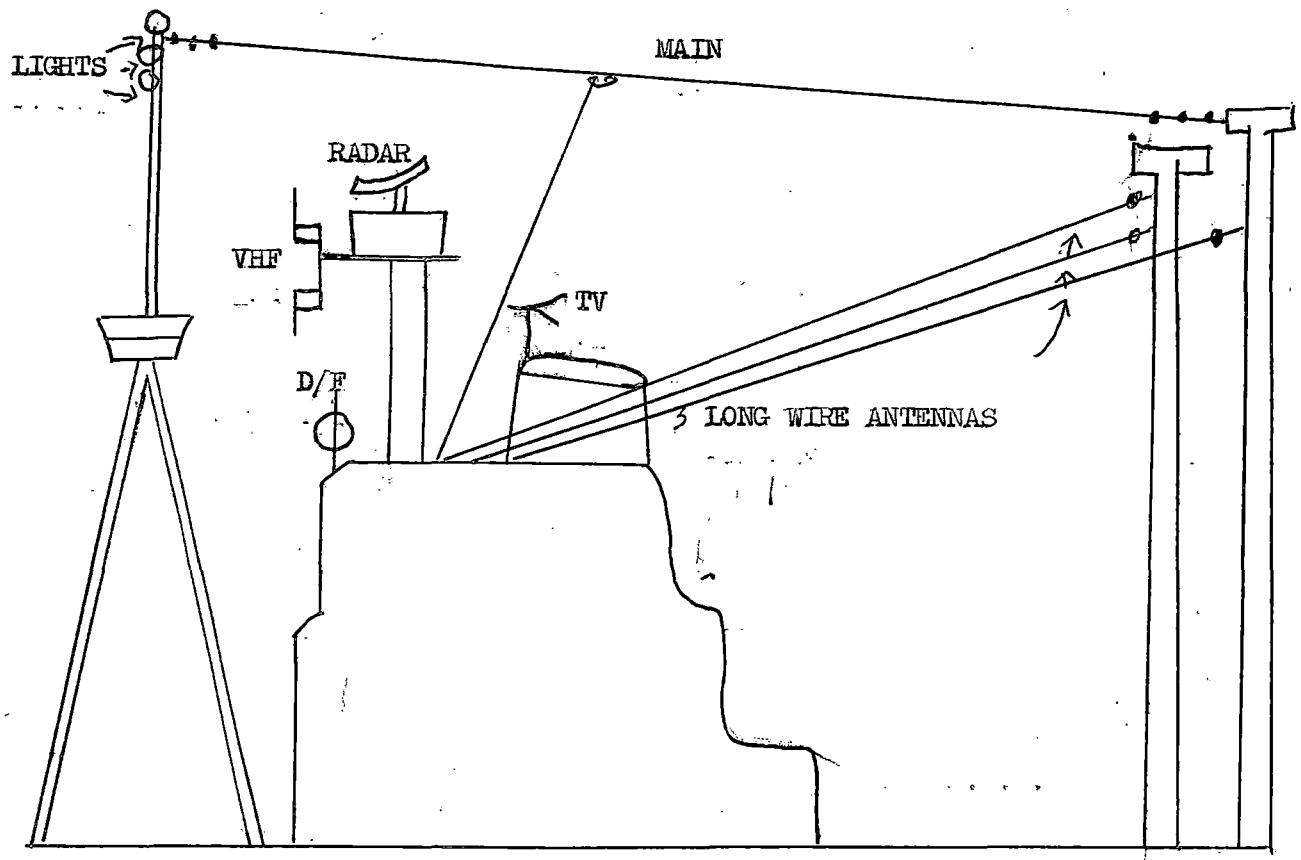

SECRET
JIB(CAN)5/66

IV. U.S.S.R.

AIRCRAFT INDUSTRY
Kiev/Svyatoshina,
18 Feb 1966

1. At Kiev/Svyatoshina, factory test field, on the south side of the field adjacent to the GOSTOMELSKOYE SHOSSE, the Canadian Air Attache and Assistant Air Attache observed

(a) one SPOONREST A,

(b) one SCOREBOARD A,

(c) numerous caged DIPOLES, and DISCONES

2. The aircraft count was one COCK (46191) and 12 COKE.

Report & Date: A20/66 of 21 Feb 66
Source: CAA/Moscow

SECRET

SECRET
JIB(CAN) 5/66

V. U.S.S.R.

FACTORY MARKINGS
Ka-26 Helicopter,
1 March 1966

1. An attempt was made to discover factory markings on equipment recently seen at a Soviet Demonstration. The only markings observed were on the bottom surfaces of the lower pair of rotor blades on a Ka-26 helicopter. Although indistinct, the top group of numbers was believed to be

BJ 235?76 BB
25040

? appeared to be a star

Report & Date: M7/66 of 1 March 1966
Source: CMA/Moscow

SECRET

SECRET
JIB(CAN) 5/66

VI. U.S.S.R.

MARKINGS - Aircraft
Moscow/Vnukovo 18 Feb 66

1. Among aircraft identified at Moscow/Vnukovo on 18 February 1966, was

COOT 75569 (#184007701)

Report & Date: A20/66 of 21 Feb 66
Source: CAA/Moscow

SECRET

CONFIDENTIAL
JIB(CAN) 5/66

VII. U.S.S.R.

SHIPPING - Ports
Heungnan 14-30 Jan 66

1. Source stated his vessel was berthed at Heungnan from 14 January until 30 January 1966.

2. Movements ashore in the port area did not appear to be restricted, emphasis being placed on the strict search of the vessel, although seamen's books were retained by harbour officials during the ship's entire stay in port. No passes were required to proceed ashore but crew members were confined to the port area. However, if 24 hours advance notice was given, a pass could be obtained to proceed to the City of Heungnan, which was 8 kilometers from the SEIKOSHIN port area.

3. No crew member ventured to Heungnan as they were advised that travel to the City would have to be with an escort and by taxi.

Report & Date: DBR 6/66 of 23 Feb 66
Source: DGI/INT S

CONFIDENTIAL

SECRET
JIB(CAN) 5/66

VIII. U.S.S.R.

SHIPPING - Merships
Visit, IVAN MOSKVIN,
Montreal, Nov-Dec 65

1. The Soviet mership IVAN MOSKVIN (callsign UKPF, Reg.No. M-19877) arrived Montreal 26 November 1965 with 3,300 tons of general cargo and departed in ballast for Saint John, N.B. 8 December, where she embarked 4,800 tons of bagged flour for an unknown Soviet port.

Date of Report: 15 Feb 66

Source: DGI/INT S

SECRET

SECRET
JIB(CAN) 5/66

VIII(b) U.S.S.R.

SHIPPING - Merships
Motor Cargo Vessel KANEV,
Halifax 25 Jan-1 Feb 66

1. The Soviet cargo ship "KANEV" (callsign UEZB) arrived Halifax, 1215Z hours on 25 January and sailed 0515Z hours 1 February, 1966.

Personalities on Board

2. The Master is NIKOLAY GOLOVENKO,

Height:	5 ft. 8 in.
Weight:	185 lbs.
Complexion:	Sallow
Hair:	Blond (straight)
Eyes:	Light blue
Lips:	Protruding lower lip
Scars:	Pock mark on right temple
English:	Good

Date of Report: 22 Feb 66
Source: DGI/INT S

SECRET

SECRET
JIB(CAN) 5/66

U.S.S.R.

VIII(c)

SHIPPING - Merships
Visit, KASIMOV, at
Montreal, 7-22 December 65

1. The Soviet mership KASIMOV (callsign USLM, Reg.No. 17502) arrived at Montreal 7 December 1965 from Havana with 1,321 tons of general cargo, consisting of terro chrome.

2. She departed Montreal 22 December for Leningrad with 11,463 LT of wheat embarked.

Date of Report: 15 Feb 66

Source: DGI/INT S

SECRET

SECRET
JIB(CAN) 5/66

VIII(d) U.S.S.R.

SHIPPING - Merships
Visits, KOMSOMOLETS UZBEK-ISTRANA, Sorel (Nov), Saint John (Dec), Halifax (Jan 66)

1. The Soviet mership KOMSOLETS UZBETKISTANA (callsign ULBI, GT 18,400) called at Sorel, P.Q. 17-19 November, and at Saint John 20 December 1965.

2. She arrived at Halifax 0800Z hours on 17 January 1966 and departed 0015Z hours on 20 January.

Personalities on Board

3. The name of the Master is GEORGY POVOD.

Height:	5 ft. 11 in.
Weight:	195 lbs
Hair:	Blond, straight
Complexion:	Fair
English:	Fair

Date of Report: 16 Feb 66
Source: DGI/INT S

SECRET

SECRET
JIB(CAN) 5/66

VIII(e) U.S.S.R.

SHIPPING - Merships
Motor Cargo Vessel KOVROV
Halifax, 22-28 Jan 66

1. The Soviet merchant Ship "KOVROV" (callsign UYXM) arrived Halifax, 1150Z hours on 22 January and sailed 0335Z hours 28 January, 1966.

Personalities on Board

2. The Master is VLADIMIR BELIAEV.

Height:	5 ft. 10 in.
Weight:	180 lbs.
Hair:	Light Brown
Eyes:	Dark Brown
Complexion:	Light
Forehead:	Deeply lined
English:	Good

A very alert "sharp" individual.

Date of Report: 22 Feb 66
Source: DGI/INT S

SECRET

SECRET
JIB(CAN) 5/66

U.S.S.R.

VIII(f)

SHIPPING - Merships
Visit, KRASNOGRAD, at
Montreal, 17-19 December 65

1. The Soviet mership KRASNOGRAD (callsign UQOX, Reg.No. M-17043) arrived Montreal 17 December 1965 in ballast, and departed 19 December for an unknown Soviet Baltic port with 11,500 LT wheat embarked.

Date of Report: 15 February 1966
Source: DGI/INT S

SECRET

SECRET
JIB(CAN) 5/66

VIII(g) U.S.S.R.

SHIPPING - Merchant Ships
PRIDNEPROVSK, Halifax N.S.,
22 January - 9 Feb 66

1. The Soviet merchant ship PRIDNEPROVSK (callsign UFSI) arrived Halifax 1115Z hours on 26 January and sailed 2350Z hours 9 February.

Personalities on Board

2. The Master is IVAN PISMENNY.

Height:	5 ft. 9 in.
Weight:	230 lbs.
Hair:	White
Eyes:	Hazel
Complexion:	Light
Teeth:	Several gold teeth (scattered)
Features:	Losse jowels
English:	Good

3. The Chief Officer is ANATOLY LAPIN.

Height:	5 ft. 10 in.
Weight:	140 lbs. (thin)
Eyes:	Dark eyes with heavy dark eyebrows
Complexion:	Very dark
English:	Good

This officer does most of the work.

Date of Report: 23 Feb 66
Source: DGI/INT S

SECRET

SECRET
JIB(CAN)5/66

VIII(h) U.S.S.R.

SHIPPING - Merships
Motor Cargo Vessel VEREIA
Halifax Feb-March 66

1. The Soviet motor cargo vessel VEREIA (callsign UKXG, 9437 GT) was in Halifax 24 February to 11 March 1966.

Personalities on Board

2. The Captain, VALENTIN BELOV, was formerly master of the Soviet vessel KOLKHOZNIK which visited Halifax in December, 1964:

Height:	5' 8"
Weight:	165 lbs
Complexion:	Sallow
Hair:	Dark, wavy
Eyes:	Brown, wears eyeglasses
Appearance:	Very neat
English:	Good

Date of Report: 25 March 66
Source: DGI/INT S

SECRET

SECRET
JIB(CAN) 5/66

IX. U.S.S.R.

SHIPPING - Fishing Fleets
Trawler ABRAM CEVO, Halifax
22-29 January 1966

1. The Soviet trawler ABRAM CEVO (RTM 7066) (callsign UTJS) arrived Halifax 1445Z hours on 22 January 1966, and sailed 1415Z hours 29 January.

General

2. Local sales clerks in retail stores are becoming adept in serving Russian seamen, the majority of whom speak no English. Although the Russians buy very few shoes and footwear for themselves, they do purchase shoes for their ladies and children.

3. The Russian enters a local store. The saleslady quickly discovers that he speak no English. He points to the item he wants and spreads his hands to indicate the approximate size required. The sales clerk thereupon hands him paper and pencil and he writes the number 27. A little mathematical calculation and the Canadian shoe size of 6½ (approximate) is arrived at. The lady makes a sale and the Russian has a new pair of shoes for his lady.

Personalities on Board

4. The Master is BORIS PODOROZHNIY.

Height: 5 ft. 2 in.
Weight: 155 lbs.
Features: Round face, double chin, thick lips
Eyes: Hazel
Hair: Light brown, long and untidy
English: Very poor

The Chief officer conducted most of the business.

Date of Repot: 3 March 66
Source: DGI/INT S

SECRET

SECRET
JIB(CAN) 5/66

IX(b) U.S.S.R.

SHIPPING - Fishing Fleets
Transport BRIS, Halifax
7-10 February 1966

1. The Soviet refrigerated-fish transport "BRIS" (callsign UEZT) arrived Halifax, 1655A hours on 7 February and sailed 1845Z hours 10 February, 1966.

2. BRIS is an all welded ship. The Captain apparently complained that while at sea, there were waves in the deck but this remark was discounted as normally this situation would be impossible in an all welded ship.

Personalities on Board

3. The Master is IGOR KLOCHKO.

Height:	5 ft. 9 in.
Weight:	190 lbs.
Hair:	dark blond
Complexion:	fair
English:	fair

4. Very cooperative with local officials.

Date of Report: 23 Feb 66
Source: DGI/INT S

SECRET

SECRET
JIB(CAN) 5/66

IX(c) U.S.S.R.

SHIPPING - Fishing Fleet
Trawler JUKHAN SYUTISTE (BMRT 333) Halifax
8 January - 11 February, 1966.

1. The Soviet factory trawler JUKHAN SYUTISTE (BMRT 333) arrived Halifax, 1700Z hours on 8 January and sailed 0345Z hours 12 February(sic),. 1966. Her callsign is URRF.

Personalities on Board

2. The Master is YURY DERGUNOV

Height:	5 ft. 8 in.
Weight:	165 lbs.
Complexion:	ruddy
Hair:	dark
English:	fair
Appearance:	clean out

Captain DERGUNOV last visited Halifax in 1960 at which time he was Master of the trawler SHT 1339.

Date of Report: 17 Mar 66
Source: DGI/INT S

SECRET

SECRET
JIB(CAN) 5/66

IX(d) U.S.S.R.

SHIPPING - Fishing Fleets
Fish Transport KORSAKOV
Halifax 8-9 February 1966

1. The Soviet fish-transport KORSAKOV (callsign UFSB) arrived Halifax 2145Z hours on 8 February and sailed 2250Z hours on 9 February 1966.

Personalities on Board

2. The Master is VITALY MELNIK.

Height:	5 ft 8 in.
Weight:	195 lbs.
Complexion:	Dark
Hair:	Dark
Face:	Full (round)
English:	Fair

3. The First Mate is IGOR POLUNIK. This officer was First Mate of the salvage tug SLAVNIJ when the tug visited Halifax on 9 July, 1965.

Date of Report: 22 Feb 66
Source: DGI/INT S

SECRET

SECRET
JIB(CAN) 5/66

IX(e) U.S.S.R.

SHIPPING - Fishing Fleet
Trawler NADIR (RTM 7024) Halifax, N.S.
3-10 February, 1966

1. The Soviet refrigerator-trawler "NADIR" (RTM 7024) arrived Halifax 0440Z hours on 3 February and sailed 1735Z hours 10 February, 1966. Her callsign is UITD.

Personalities on Board

2. The Master is VLADIMIR NESTEROV,

Height:	5 ft. 8 in.
Weight:	185 lbs.
Complexion:	dark
Hair:	dark brown
Eyes:	brown
Marks:	small pock mark on left check
English:	Nil

A most meticulous individual. The Russian shipping representative in Halifax acted as interpreter for the transaction of business.

Date of Report: 23 Feb 66
Source: DGI/INT S

SECRET

SECRET
JIB(CAN) 5/66

IX(f) U.S.S.R.

SHIPPING - Fishing Fleet
Water Tanker SIGULDA, Halifax
20-23 Feb., and 28 Feb-2 March 66

1. The Soviet water-tanker "SIGULDA" (callsign USOT?) made two trips to Halifax - 20-23 February and the second was 28 February - 2 March 1966.

2. During the first visit outlined above, the Chief Engineer of the vessel was asked for the whereabouts of the ship's previous Captain, HANS THOMINGAS, who had been Captain of this vessel when she visited Halifax in 1963 and 1964. The Chief Engineer waited for the present Captain to be out of earshot before replying, then he said that Captain THOMINGAS was on an extended vacation in Russia.

3. During the ship's tour of duty in the Western Atlantic in 1963/64 the vessel had been in some way involved (together with another Soviet vessel) in the search for a missing USA aircraft and this Captain THOMINGAS had brought the photographs and details of the search to authorities in Halifax. These details and photographs were later published as an article in Life Magazine. The article in the magazine stated that the photographs had been made available through the courtesy of the ship's Captain, HANS THOMINGAS, although the photographs had been taken by another ship and SIGULDA had just been used to transfer them to shore.

Personalities on Board

4. The Master is G. AKIS.

Height:	5 ft. 10 in.
Weight:	200 lbs.
Hair:	straight dark
Eyes:	light blue
Complexion:	ruddy
English:	nil

Date of Report: 17 Mar 66
Source: DGI/INT S

SECRET

SECRET
JIB(CAN) 5/66

IX(g) U.S.S.R.

SHIPPING - Fishing Fleet
Trawler ZARAJSK (RTM 7065) Halifax, N.S.
12 January to 1 February 1966.

1. The Soviet trawler "ZARAJSK" (RTM 7065) (callsign UTKH) arrived Halifax 1645Z hours on 12 January and sailed 1450Z hours 1 February.

2. ZARAJSK is a new trawler, built in East Germany, and this was reported to be her first voyage. The trawler carried 132 tons of frozen fish.

Personalities on Board

3. The Master is OLEG STRASHNOV.

Height:	5 ft. 8 in.
Weight:	165 lbs.
Complexion:	Sallow
Hair:	dark and wavy
Eyes:	brown
English:	fair

Date of Report: 23 Feb 66
Source: DGI/INT S

SECRET

SECRET
JIB(CAN) 5/66

X. U.S.S.R.

SHIPPING - Electronic Reports
OGONJ, Vancouver, 4 Oct 65

1. A small "survey"(?) vessel, Vladivostok Registry No. 348, was seen but not visited in Vancouver, 4 October 65.

2. It looked similar to an English-built trawler, of approximately 500 tons. From exterior inspection it could be concluded that only the minimum radio installation would be possible, with fairly low power units.

Date of Report: 24 Feb 66
Source: DGI/INT S

SECRET

SECRET
JIB(CAN) 5/66

X(b)

U.S.S.R.

SHIPPING - Electronic Reports
Mership AMURSKLES, Vancouver
18 October 1965

1. The Soviet mership AMURSKLES was inspected in Vancouver, B.C., 18 October 1966. Her callsign is USJO; port of registry, Vladivostok; crew, 36; tonnage, approximately 6000 gross; 2 radio operators carried. No delay was involved and inspection was normal. Vessel loading sulphur in bulk; bridge doors were closed on account of the fine dust. Previous inspection was Dec. 1963.

Date of Report: 24 Feb 66
Source: DGI/INT S

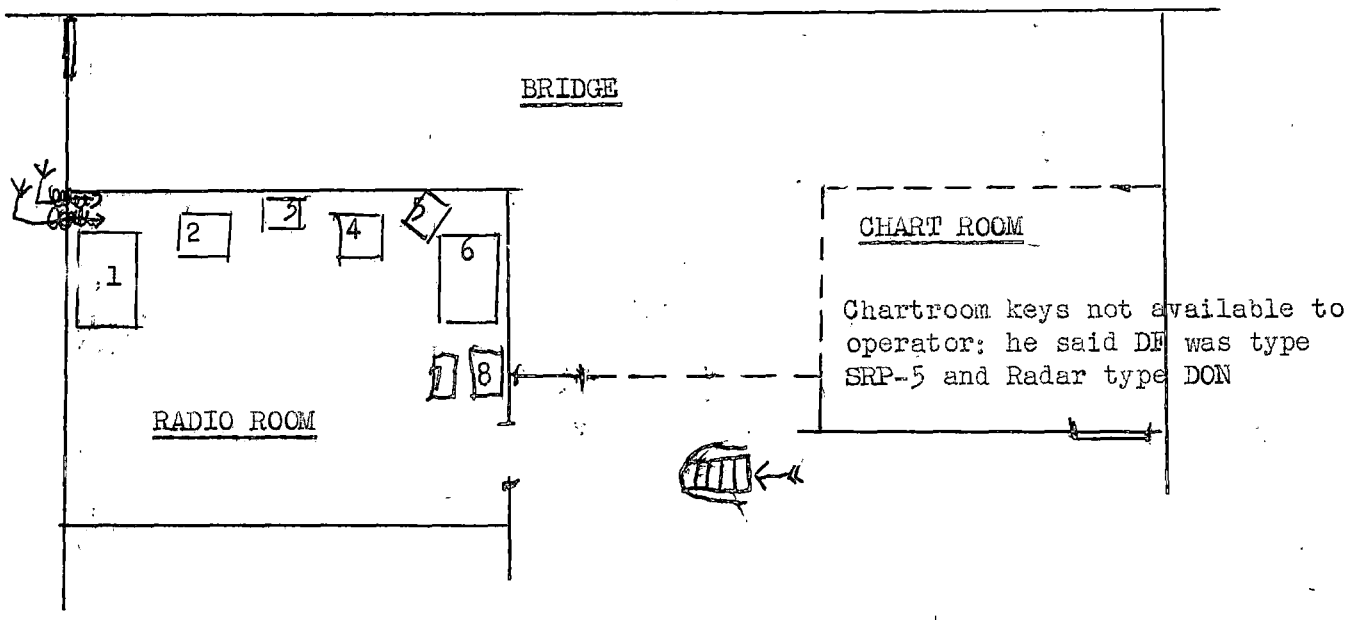

1.	Blesna H/F Transmitter	0681	2840-22720 Kc Xtal Lt. Grey. No. year. 250W
2.	Volna K Receiver	19624156	12-60 & 100-23000 Kc/s
3.	PAS 2 " Emergency	1962 1564	360-600 Kc/s 24/Volt supply
4.	Volna K	19624157	12-60 & 100-23000 Kc/s
5.	ASP-2 Emerg. Transmitter	1962 1066	410-512 Kc/s 24-Volt Supply. 60 Watts
6.	Blesna MF Transmitter	0712	365-550 Kc/s L/C (MO) control. 250 Watts
7.	Akatsia VHF "/Recr.	1958 ??	No. on metal plate, illegible. 20 Watts
8.	Auto Alarm Recr. APM-54-P	1962 134	500 Kc/s

Shlup Portable Lifeboat equipment.
HF transmitter showed tunings on 3, 4, 6, 8, 12, 16 & 22 Mc/s
VHF on 4 Russian frequencies only.
MF on 7 normal international frequencies.
Main aerial wire "T" type. Emergency aerial "whip" type. Belini-tosi DF loops.

SECRET

SECRET
JIB(CAN) 5/66

U.S.S.R.

X(c)

SHIPPING - Electronic Reports
Mership IVAN MOSKVIN, Saint John
15 December 1965

1. The Soviet mership IVAN MOSKVIN was inspected in Saint John, N.B., on 15 December 1965. Her callsign is UKPF; port of registry, Leningrad; owners, Baltic SS Co., Leningrad; tonnage, 3385.17 gross. Radio safety certificate expires 19 October 1965.

Date of Report: 15 Feb 66
Source: DGI/INT S

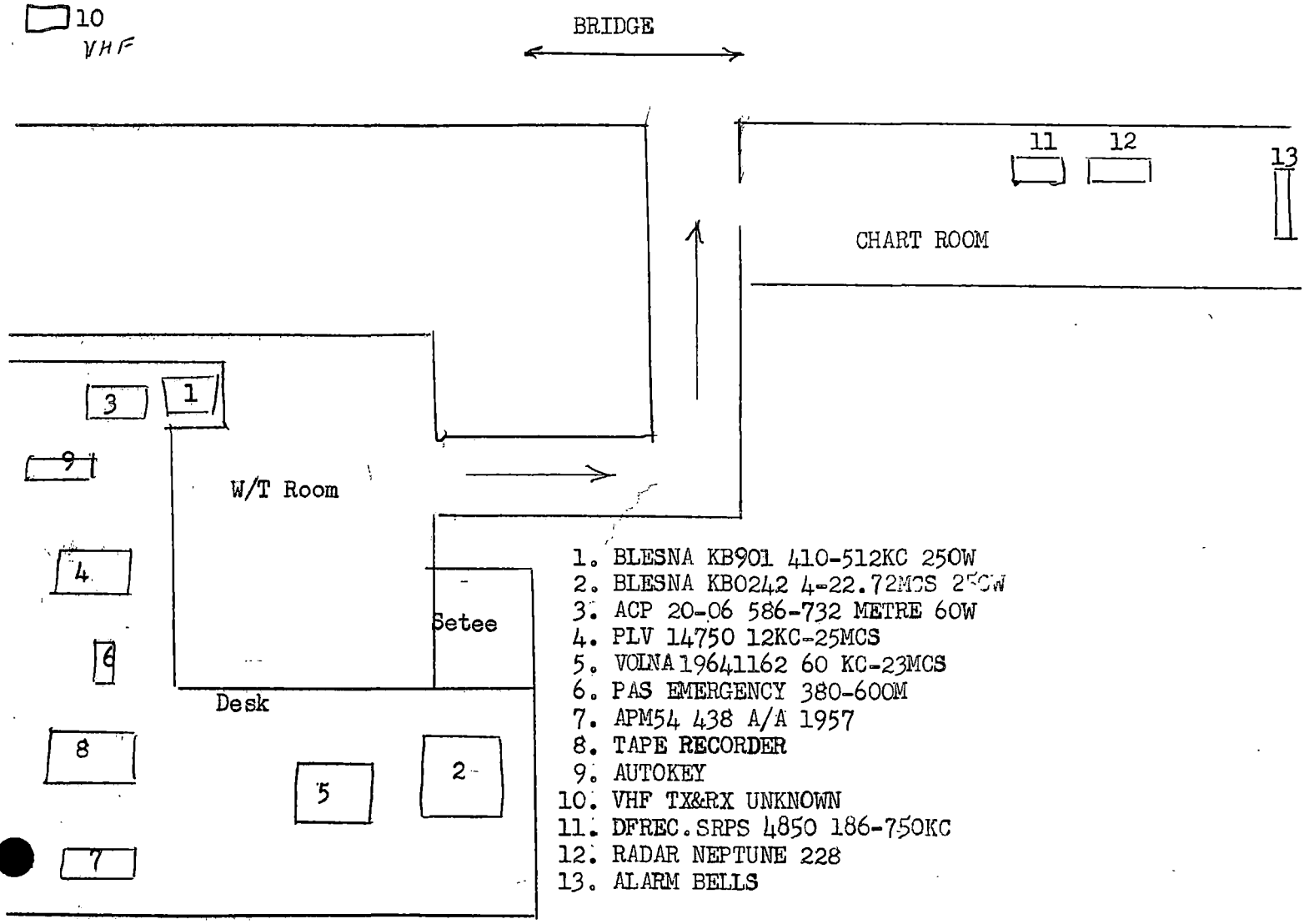

1. BLESNA KB901 410-512KC 250W
2. BLESNA KB0242 4-22.72MCS 250W
3. ACP 20-06 586-732 METRE 60W
4. PLV 14750 12KC-25MCS
5. VOLNA 19641162 60 KC-23MCS
6. PAS EMERGENCY 380-600M
7. APM54 438 A/A 1957
8. TAPE RECORDER
9. AUTOKEY
10. VHF TX&RX UNKNOWN
11. DFREC. SRPS 4850 186-750KC
12. RADAR NEPTUNE 228
13. ALARM BELLS

(IVAN MOSKVIN electronic report, Dec. 1965)

SECRET
JIB(CAN) 5/66

VISUAL INSPECTION ANTENNA SYSTEM

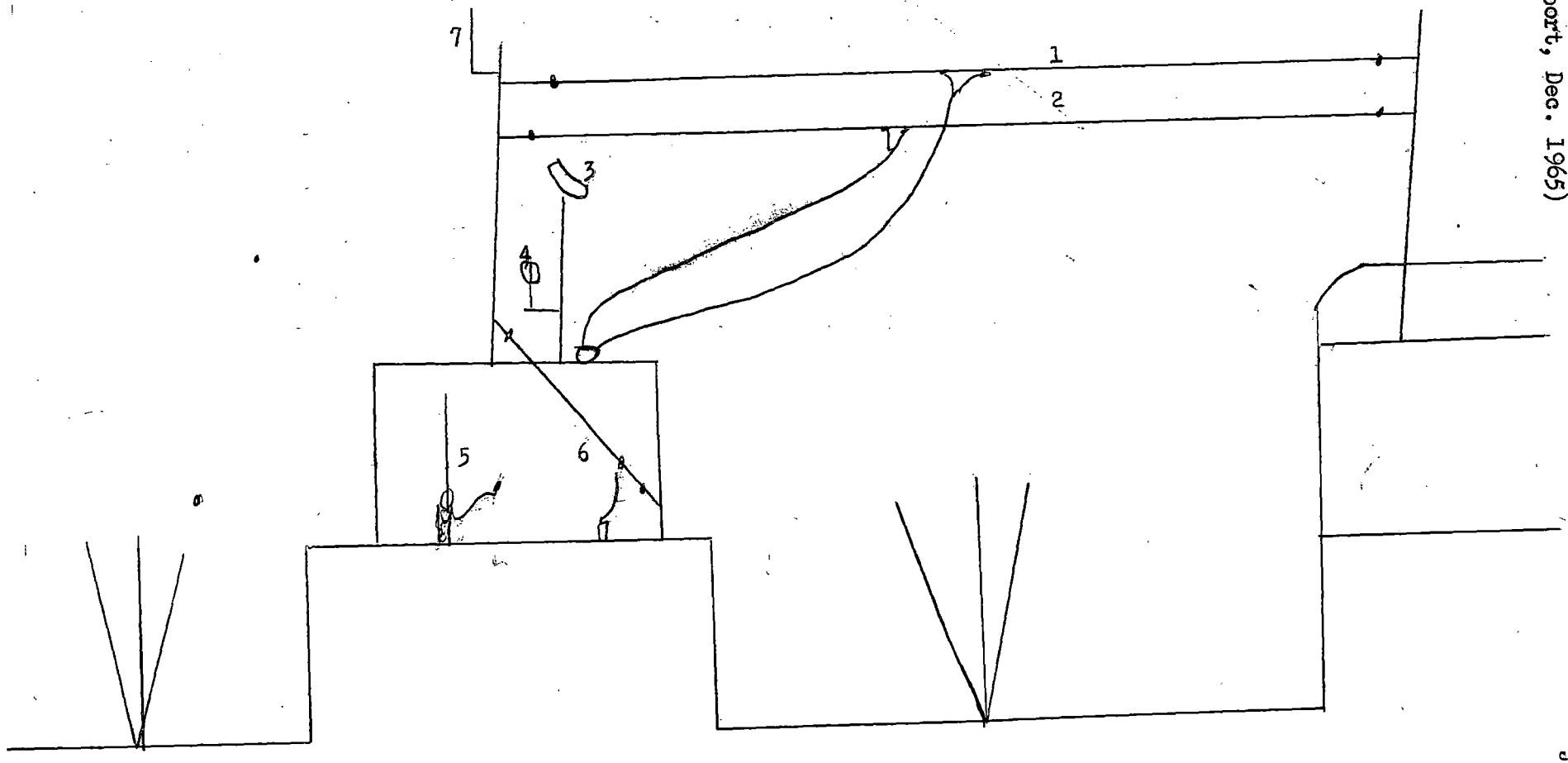

FORE

1. LONG WAVE
2. HF
3. RADAR
4. DF
5. HF
6. REC
7. WHF

SECRET
JIB(CAN) 5/66

X(d) U.S.S.R.

SHIPPING - Electronic Reports
Mership KANEV, Halifax N.S.,
31 January 1966

1. The Soviet mership KANEV was inspected in Halifax, 31 January 1966. Her callsign is UEZB; port of registry, Leningrad; owners, USSR; tonnage, 9269 gross and 5163 net; 2 radio operators carried; safety radio certificate expires 16 September 1966.

Date of Report: 4 March 66
Source: DGI/INT S

VISUAL INSPECTION OF
ANTENNA SYSTEM

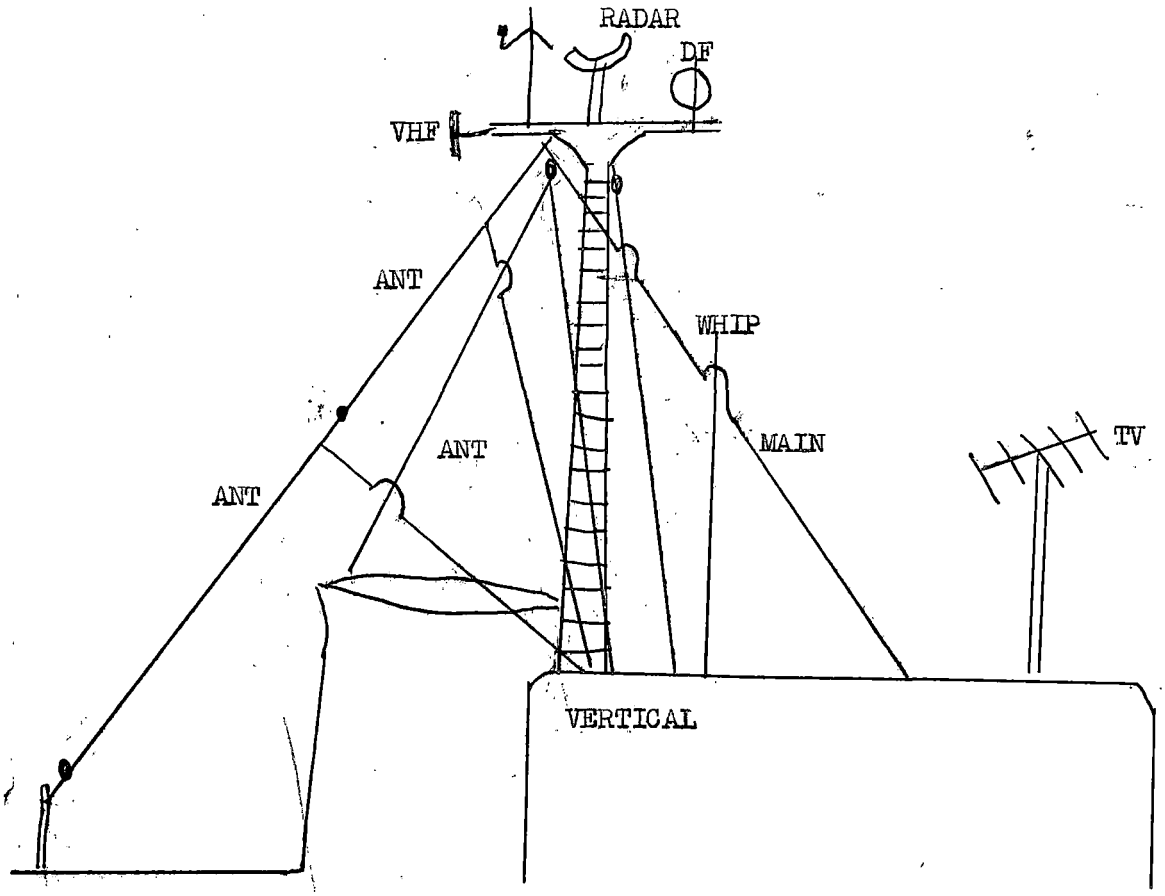

A.M.S.

SECRET

(Mership KANEV,
Electronic Report)

SECRET
JIB(CAN) 5/66

EQUIPMENT CARRIED

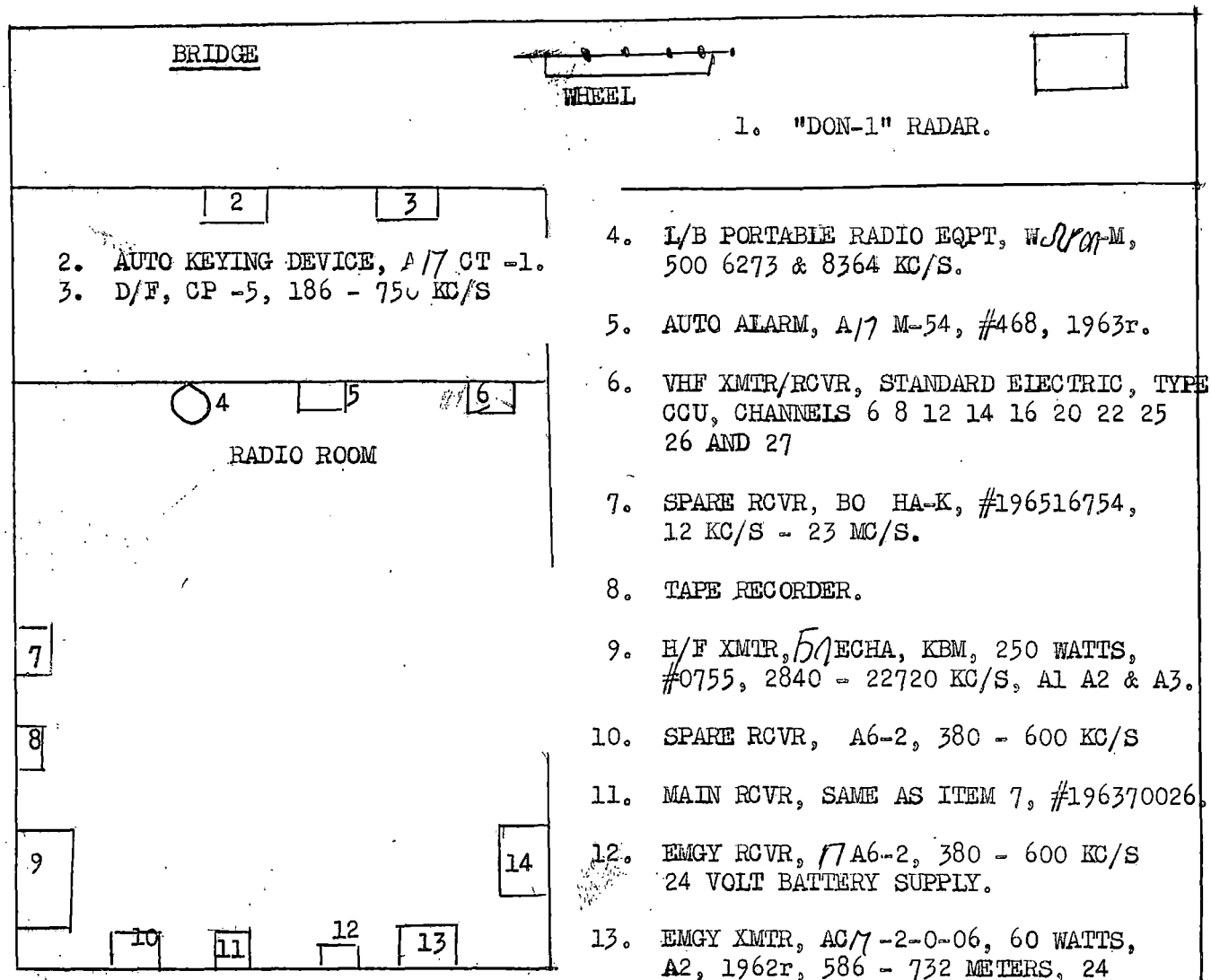

1. "DON-1" RADAR.

2. AUTO KEYING DEVICE, A/7 CT -1.
3. D/F, CP -5, 186 - 750 KC/S

4. L/B PORTABLE RADIO EQPT, WSR-M, 500 6273 & 8364 KC/S.

5. AUTO ALARM, A/7 M-54, #468, 1963r.

6. VHF XMTR/RCVR, STANDARD ELECTRIC, TYPE CCU, CHANNELS 6 8 12 14 16 20 22 25 26 AND 27

7. SPARE RCVR, BO HA-K, #196516754, 12 KC/S - 23 MC/S.

8. TAPE RECORDER.

9. H/F XMTR, BA ECHA, KBM, 250 WATTS, #0755, 2840 - 22720 KC/S, A1 A2 & A3.

10. SPARE RCVR, A6-2, 380 - 600 KC/S

11. MAIN RCVR, SAME AS ITEM 7, #196370026.

12. EMGY RCVR, A7 A6-2, 380 - 600 KC/S 24 VOLT BATTERY SUPPLY.

13. EMGY XMTR, AC/7 -2-0-06, 60 WATTS, A2, 1962r, 586 - 732 METERS, 24 VOLT BATTERY SUPPLY.

14. MAIN XMTR, BA ECHA, CB, #0679-A, 365 - 550 KC/S, 250 WATTS, A1 & A2.

SECRET

SECRET
JIB(CAN) 5/66

X(e)

U.S.S.R.

SHIPPING - Electronic Reports
Soviet Mership KASIMOV,
Montreal 7-22 December 65

1. The Soviet mership KASIMOV arrived in Montreal 7 December 65, from Havana with 1,321 tons of general cargo consisting of Terro Chrome. She sailed for Leningrad 22 December with 11,463 LT wheat embarked.

2. Her callsign is USLM; her register number, M-17052. Her port of registry is Leningrad; her gross tonnage, 9269.11; safety radio certificate expires 31 August 1966.

3. She carries one radio operator, is fitted with auto alarm, main and emergency installations, direction finder; and the main and emergency transmitters are electrically separated.

Date of Report: 15 Feb 66
Source: DGI/INT S

SECRET

SECRET
JIB(CAN) 5/66

X(f)

U.S.S.R.

SHIPPING - Electronic Reports
Mership KOMSOMOLETS UZBEKISTANA,
Halifax 18 Jan 66

1. The Soviet mership KOMSOMOLETS UZBEKISTANA was inspected in Halifax, 18 January 1966. Her callsign is ULBI; port of registry, Leningrad; owners, USSR; tonnage, 18,400 gross and 12,000 net; two radio operators carried; valid safety radio certificate aboard.

Date of Report: 16 Feb 66
Source: DGI INT/S

BRIDGE

WHEEL

2

1. VHF XMTR/RCVR, AKAШ, 25 WATTS, 125.00 126.00 & 132.00 MC/S.

2. RADAR, "DON" 3. L/B EQPT, WOЛНА-M, 500 6273 & 8364 KC/S.

3

1 8 9 10 11 12

12. MAIN XMTR, БЛЕСНА СВ, 250 W, #010418, 365 - 550 KC/S, A1 & A2.

13. EMGY XMTR, АСП-4, 60 WATTS, #378, 410 - 512 KC/S, 1965, A2.

14. EMGY RCVR, NO MODEL SHOWN, MATE FOR ITEM 13, 380 - 600 KC/S, #196515008.

15. AUTOALARM, АПМ-4, #1423, 1964г.

13 14 7 6 15

CHART ROOM

4. AKD, АМСТБ-1М.
5. D/F, SRP-4N, 240 - 530 KC/S
6. SWEDISH MADE TAPE RECORDER
7. HF XMTR, БЛЕСНА КВМ, 2840 - 22720 KC/S, 250 WATTS, A1, A2 & A3
8. MAIN RCVR, ВОЛНА-К, 12 KC/S - 23 MC/S.
9. AUTOMATIC KEY, ЗКт-2, #507.
10. ANTENNA C/O SWITCH.
11. VHF XMTR/RCVR, SWEDISH MADE, "STORNO", 25 WATTS, CHANNELS 1 TO 28.

4 9

SECRET

VISUAL INSPECTION ANNTENNA SYSTEM

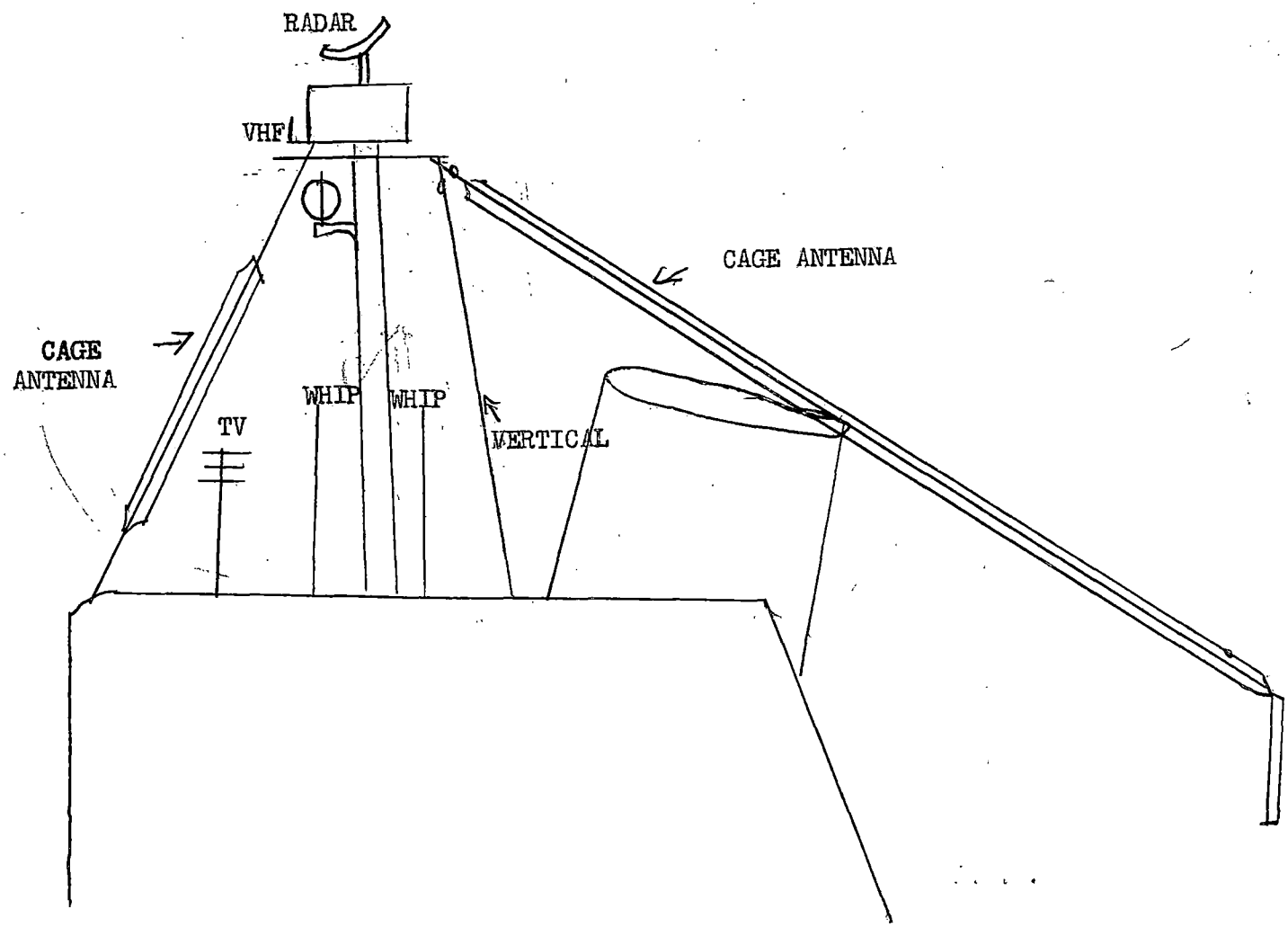

(KOMSOMOLETS UZBEKISTANA,
electronic report Jan 66)

SECRET
JIB(CAN) 5/66

Details of inspection at Saint John's, NB,
15 December 1965

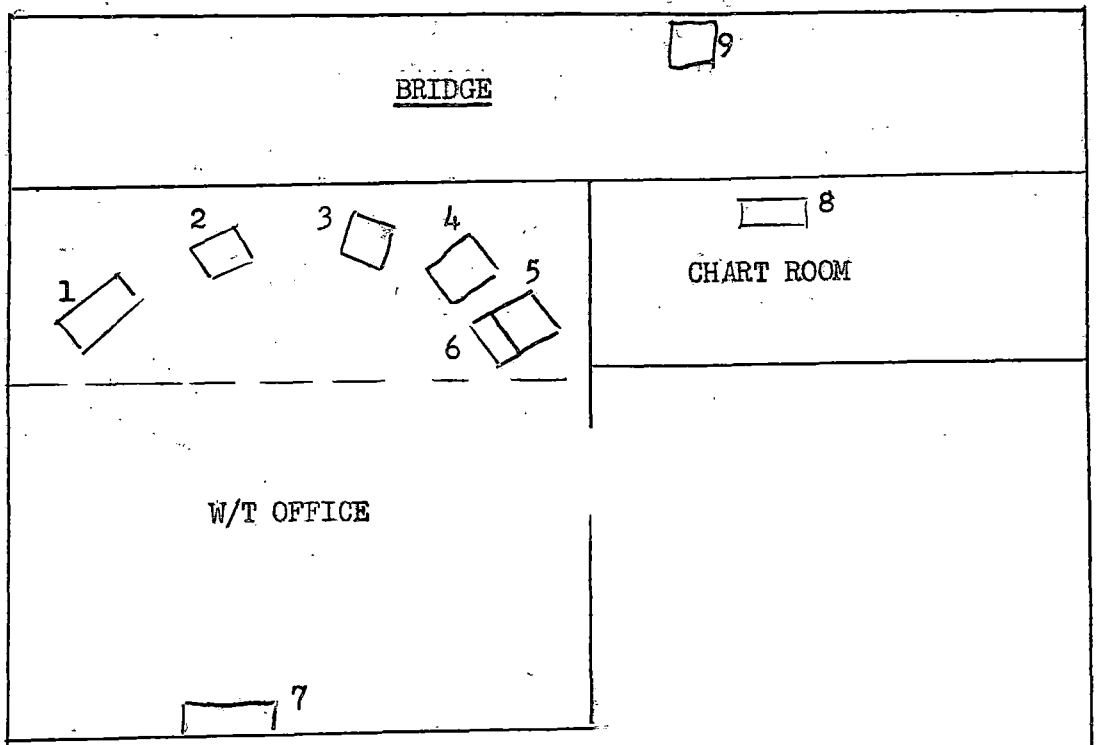

1. MAIN XMTR. BLESNA #01048 250W
2. VOLNA RCVR. K 1965 #015018
3. " " " " #013008
4. H.F. XMTR. BLESNA KBM #1082 250W
5. EMGCY XMTR. ACP 4 #378 60 W
6. EMGCY RCVR. PAS 1 M
7. AUTO ALARM APM 54 P
8. D.F. C.PISCH (HAMBURG) SEP 4 N
9. RADAR DON #30941

SECRET

(Further details of 15 Dec inspection)

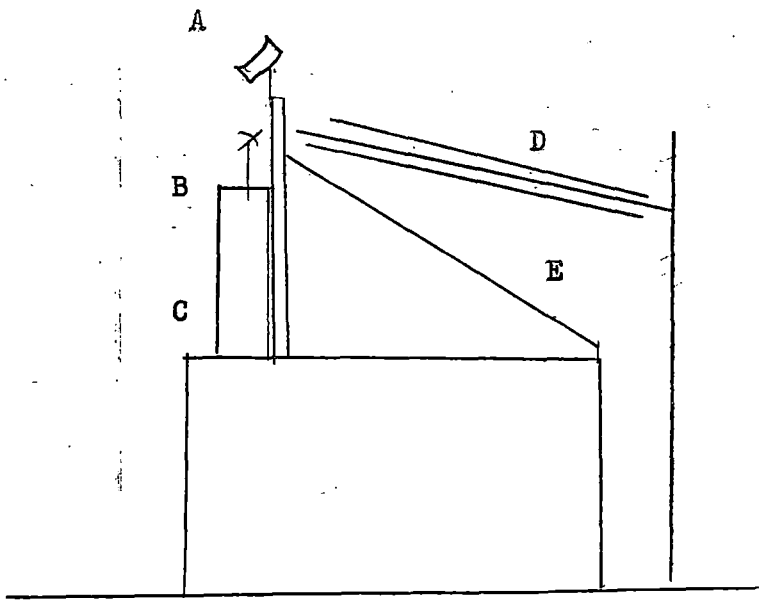

PROFILE

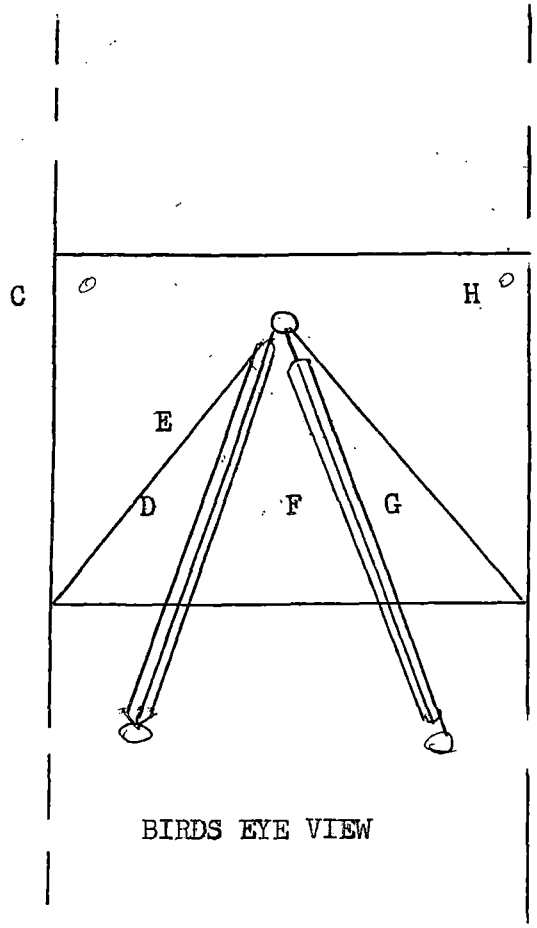

BIRDS EYE VIEW

A. RADAR

B. DIRECTION FINDER

C. HF WHIP TX

D. MAIN TX

E. RCVG MAIN.

F. EMGCY.

G. RCVG,

H. HF WHIP RCVG,

I. TELEVISION.

SECRET
JIB(CAN)5/66

X(g) U.S.S.R.

SHIPPING - Electronic Reports
Mership KRASNOGRAD, Saint John,
21 January 1966

1. The Soviet mership KRASNOGRAD was inspected in Saint John, N.B., on 21 January 1966. Her callsign is UQOX; owners, Baltic Sea SS Line; reg'd Leningrad No. 1226; gross tons 9254.41; mership safety certificate 17043/15 dated 2 November 1965.

Date of Report: 15 Feb 66
Source: DGI/INT S

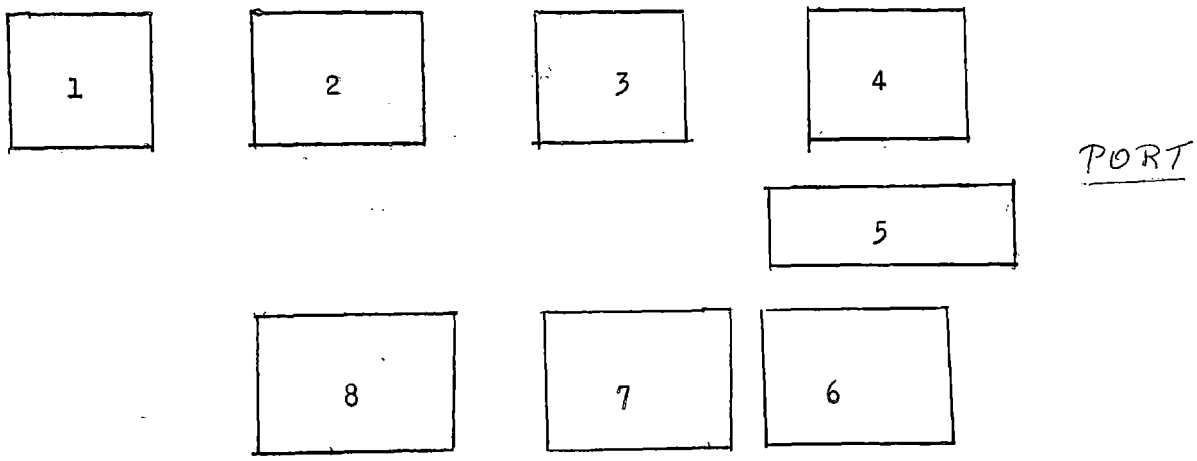

1....Blessna Trans. #0623 365-550 kc/s
2....Volna Rec'r. #19611770 60-23000 kc/s
3.... " "
4....ASP Emergency Trans. #935
5....PAS-2 Rec'r. Emergency
6....Blessna H.F. Trans. #0568 2840-22720 kc/s
7....P-670 Main Rec'r #0172460364 15 kc/s - 25 mc/s
8....Acacia VHF Rec'r. 132 mc/s #570812

On Bridge:

Radar	DOM-2
SRP-5	D.F. 186-750 kc/s
A/A	APCTB-IM #598

SECRET

(KRASNOGRAD electronic report, Jan 1966)

SECRET
JIB(CAN) 5/66

VISUAL INSPECTION ANTENNA SYSTEM

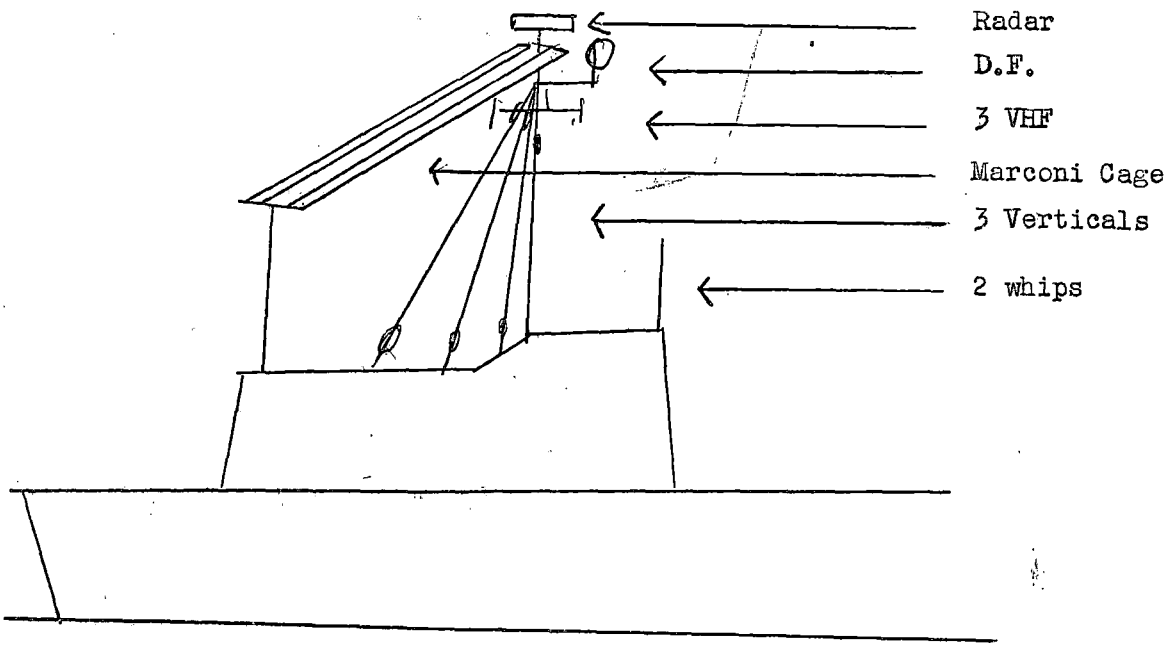

SECRET
JIB(CAN)5/66

X(h)

U.S.S.R.

SHIPPING - Electronic Reports
Mership VATUTINO,
Saint John NB, 21 Jan 66

1. The Soviet mership VATUTINO was inspected in Saint John, N.B., on 21 January 1966. Her callsign is UNSQ; port of registry, Leningrad; owners, Leningrad S/S Line; Gross tons, 9486.33; safety certificate 27008/15/65 September 15/65.

Date of Report: 23 Feb 66
Source: DGI/INT S

VISUAL INSPECTION
ANTENNA SYSTEM

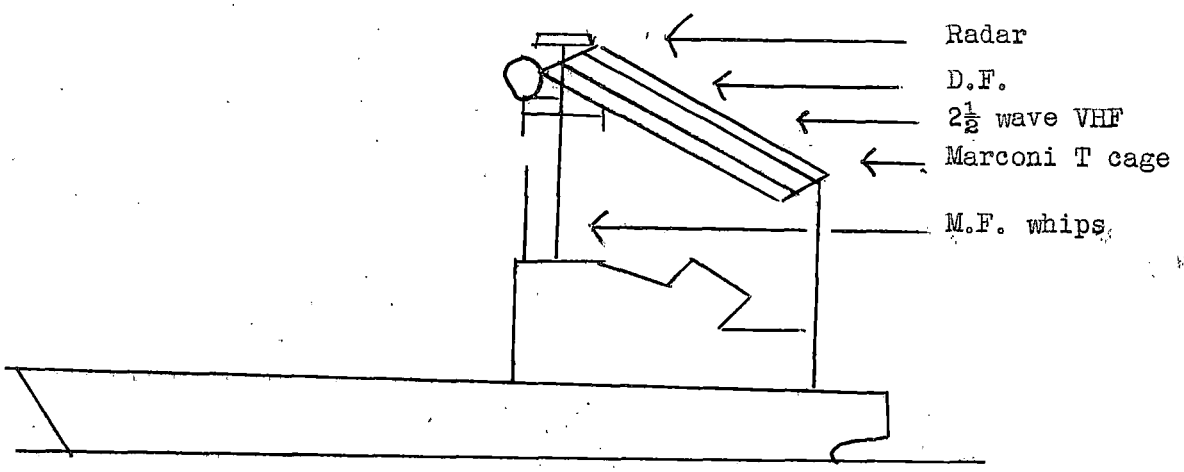

(Mership VATUTINO
electronic report)

SECRET
JIB(CAN)5/66

EQUIPMENT CARRIED

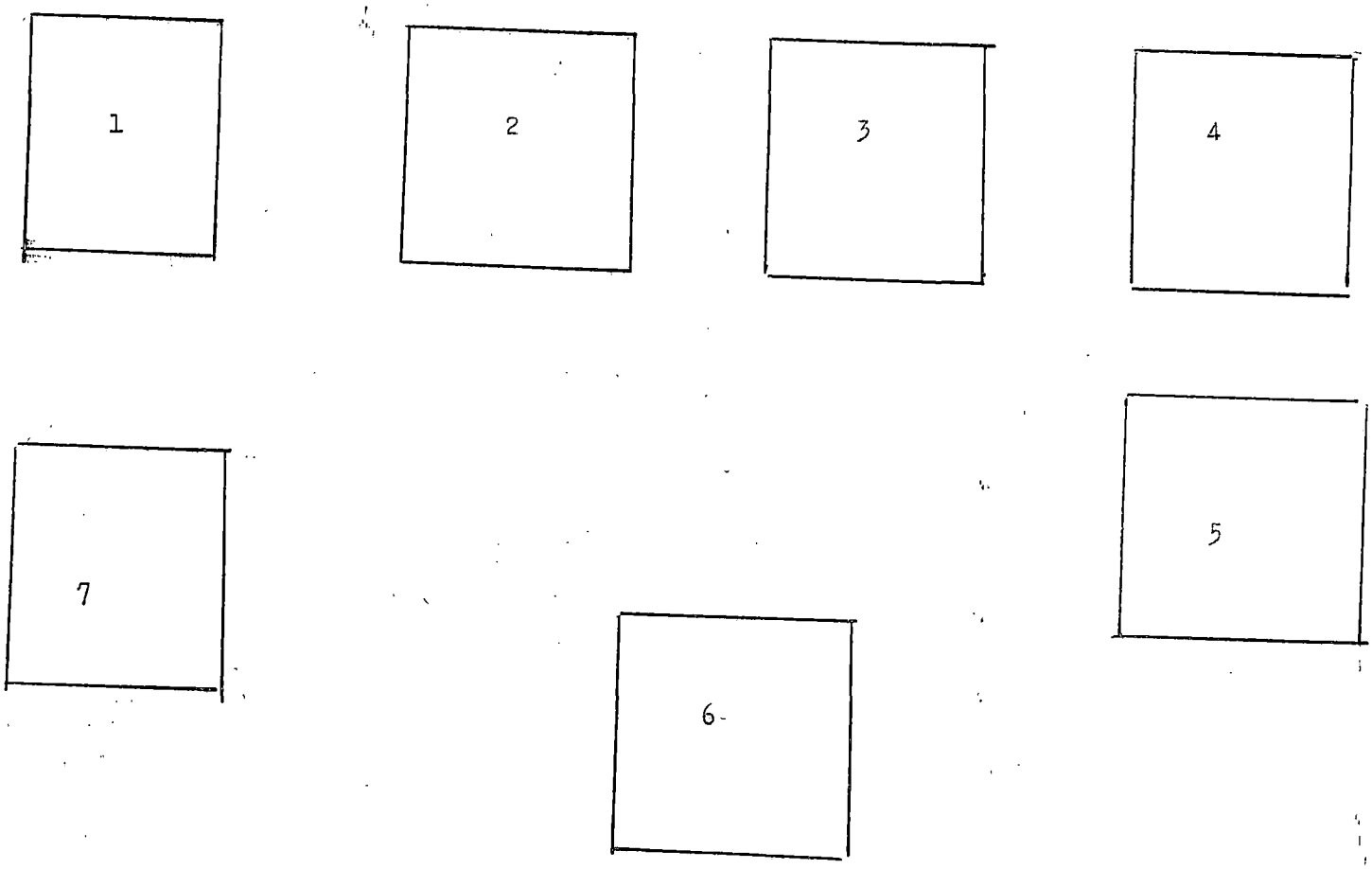

1...Volna Rec'r #19624798 12 kc/s - 23000 kc/s
2... " #196412110 "
3...PAS Emergency Trans. #179 400 - 550 kc/s
4...Volna Rec'r. #196412113 12 - 23000 kc/s
5...ILmen H.F. Trans. #0075 1500 - 24000 kc/s
6...Korabl VHF Trans. #000368 156 - 161 mc/s
7...Volkov M.F. Trans. #0108 410 - 512 kc/s

On Bridge:
Radar DOM-2
D.F. SRP-5 186-750 kc/s
A/A APSTB-IM

SECRET
JIB(CAN) 5/66

XI. U.S.S.R.

SHIPPING - Electronics Report
Supply Tanker BALTA,
Halifax 8 February 1966

1. The Soviet supply tanker, a sister ship of the PIRJATIN, was inspected in Halifax 8 February 1966. Her callsign is UBCL; port of registry, Riga; owners, USSR; net tonnage, 1575; two radio operators carried; valid safety certificate carried.

Date of Report: 22 Feb 66
Source: DGI/INT S

VISUAL INSPECTION ANTENNA SYSTEM

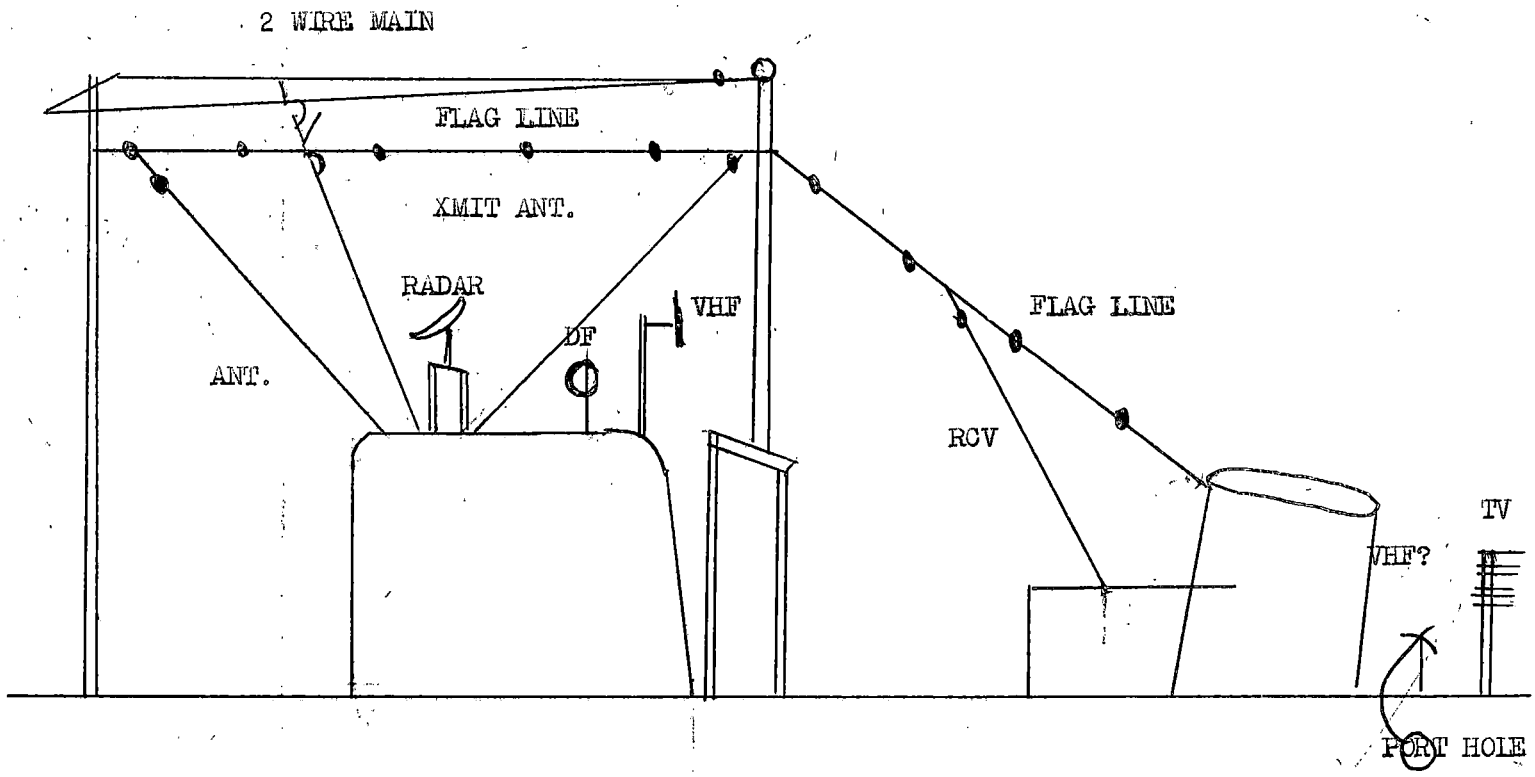

SECRET

(Supply tanker BALTA,
electronic report)

SECRET
JIB(CAN) 5/66

EQUIPMENT CARRIED

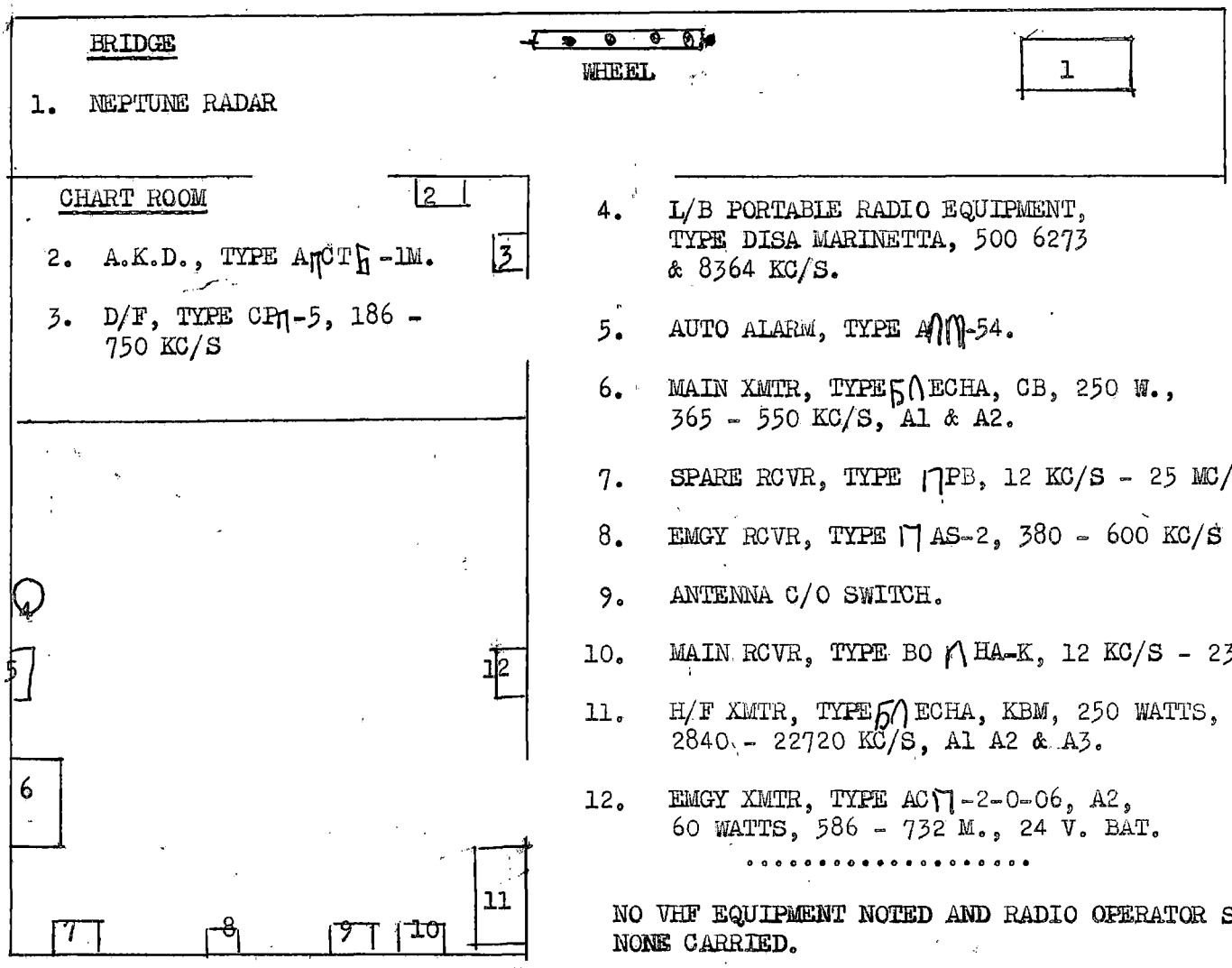

1. NEPTUNE RADAR

2. A.K.D., TYPE ACCT -1M.

3. D/F, TYPE CPM-5, 186 - 750 KC/S

4. L/B PORTABLE RADIO EQUIPMENT, TYPE DISA MARINETTA, 500 6273 & 8364 KC/S.

5. AUTO ALARM, TYPE AMM-54.

6. MAIN XMTR, TYPE BMECHA, CB, 250 W., 365 - 550 KC/S, A1 & A2.

7. SPARE RCVR, TYPE MPB, 12 KC/S - 25 MC/S.

8. EMGY RCVR, TYPE MAS-2, 380 - 600 KC/S

9. ANTENNA C/O SWITCH.

10. MAIN RCVR, TYPE BOMHA-K, 12 KC/S - 23 MC/S.

11. H/F XMTR, TYPE BMECHA, KBM, 250 WATTS, 2840 - 22720 KC/S, A1 A2 & A3.

12. EMGY XMTR, TYPE ACM-2-0-06, A2, 60 WATTS, 586 - 732 M., 24 V. BAT.

.....

NO VHF EQUIPMENT NOTED AND RADIO OPERATOR SAYS NONE CARRIED.

SECRET

SECRET
JIB(CAN) 5/66

XI(b) U.S.S.R.

SHIPPING - Electronic Reports
Fish Transport BRIS, Halifax
8 February 1966

1. The Soviet refrigerated-fish transport BRIS was inspected in Halifax, 8 February 1966. Her callsign is UEZT; port of registry, Tallinn; tonnage, 4728 gross and 2667 net; owners, USSR; one radio operator carried; valid safety certificate.

Date of Report: 23 Feb 66
Source: DGI/INT S

VISUAL INSPECTION ANTENNA SYSTEM

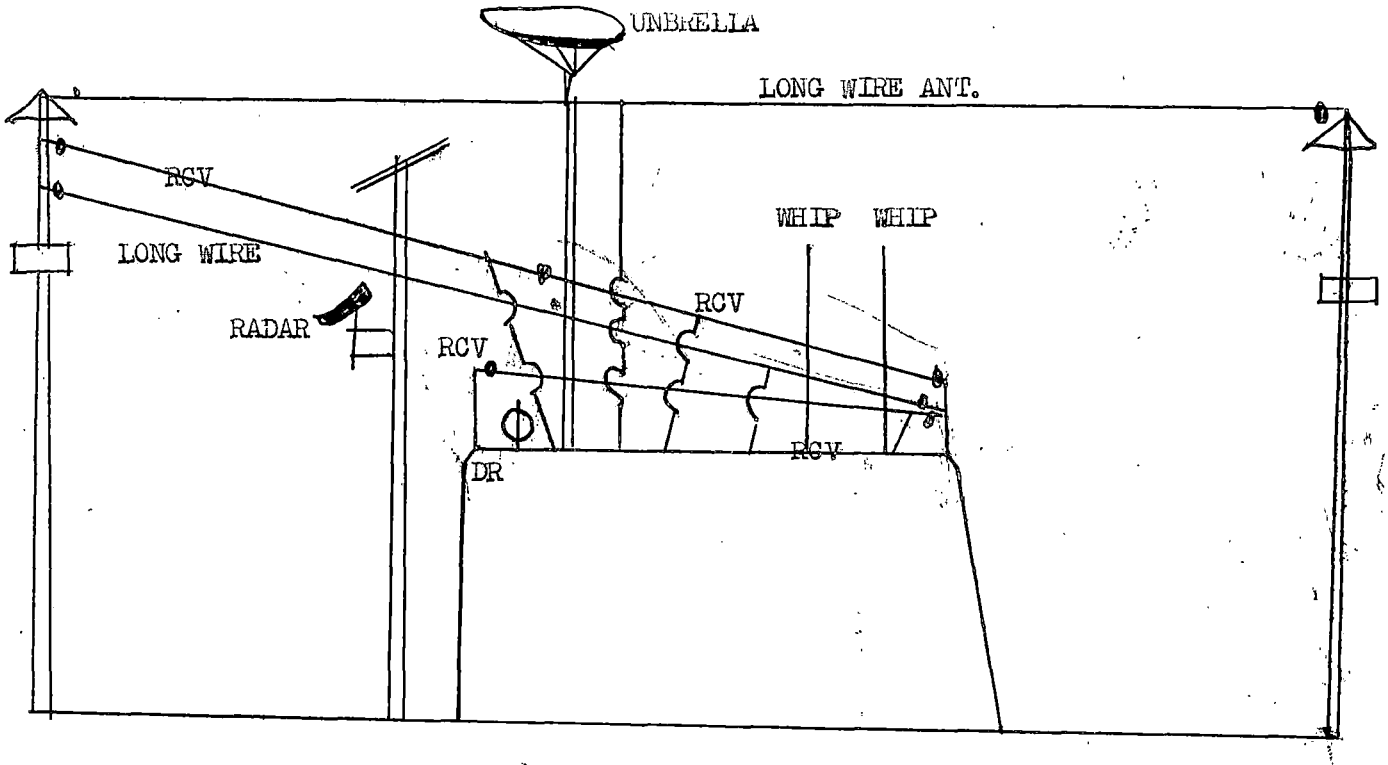

SECRET

(Fish Transport BRIS,
electronic report)

SECRET
JIB(CAN) 5/66

EQUIPMENT CARRIED

BRIDGE

WHEEL

1

1. DECCA RADAR (DISPLAY UNIT TYPE 669)

CHART ROOM

2. D/F, TELEFUNKEN, TYPE PE39/3, 280 - 320 & 1600 - 400 KC/S.

2

7 8 9 10 11 12 13

14

RADIO ROOM

6

13. VHF TRANSCEIVER, DEBEG, NO TYPE OR #, CHANNELS 1 TO 28 INCL.

14. PORTABLE L/B EQPT, WALTON M, 500 6273 & 8364 KC/S.

5

4

3

3. RUSSIAN MADE XMTR, TYPE R-6YID, #W40005, 1000 WATTS, 3 - 24 MC/S, A1 A2 & A3.

4. H/F RCVR, TYPE P-670, 1.5 - 24 MC/S 410 - 512 KC/S, 24 VOLT BAT. SUPPLY.

6. A.K.D., DEBEG, NO TYPE SHOWN.

7. MAIN RCVR, SIEMENS, TYPE E566, 14 KC/S - 30.3 MC/S.

8. MAIN XMTR, TELEFUNKEN, TYPE S-519/2-50, #621452, A1 & A2, 300 W., 410 - 500 KC/S.

9. HF XMTR, TELEFUNKEN, S-526/3, #621491, 375 WATTS, A1 & A3, 4 - 22 MC/S

10. EMGY XMTR, TELEFUNKEN, SM227, #036, 70 WATTS, A1 A2, 410 - 512 KC/S.

11. R/T XMTR, TELEFUNKEN, S509, #W6/79058, 100 WATTS, 1.6 - 3 MC/S.

12. AUTO ALARM, LORENZ, TYPE LO-672, #6/82209-63, 500 KC/S.

SECRET
JIB(CAN) 5/66

XI(c) U.S.S.R.

SHIPPING - Electronic Reports
Trawler NADIR, Halifax
7 February 1966

1. The Soviet refrigerator trawler NADIR (RTM 7024) was inspected in Halifax 7 February 1966. Her callsign is UITD; port of registry, Kaliningrad; owners, USSR; tonnage, 3170 gross and 1070 net; one radio operator; valid safety radio certificate aboard.

Date of Report: 23 Feb 66
Source: DGI/INT S

VISUAL INSPECTION ANTENNA SYSTEM

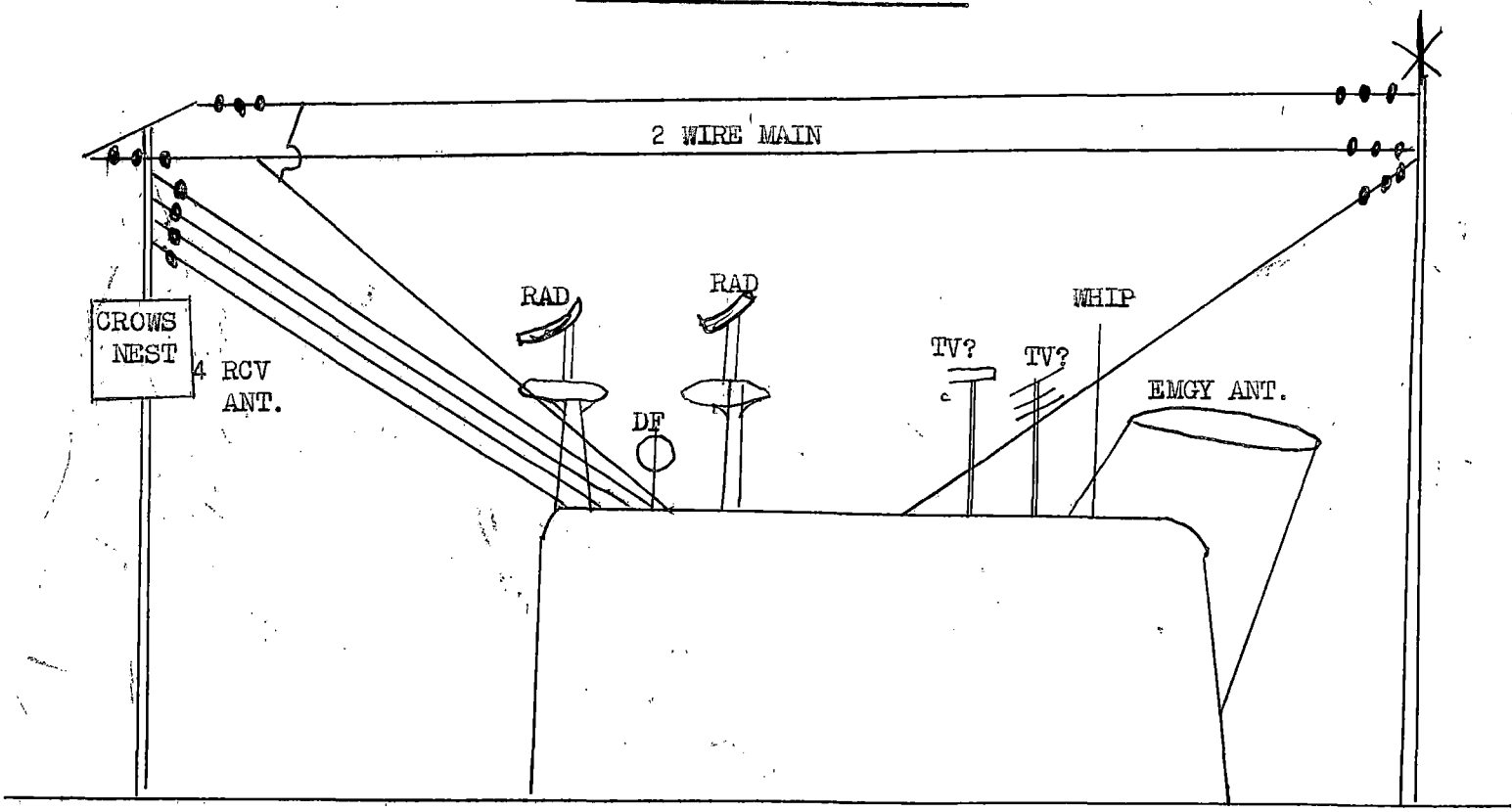

SECRET

(Trawler NADIR,
Electronic report)

SECRET
JIB(CAN) 5/66

EQUIPMENT CARRIED

BRIDGE

WHEEL

1

1. "DONETS" RADAR.
2. "DON" RADAR.
3. D/F, RFT, TYPE 1350.17A, 62, 200 - 540 KC/S & 500 - 3000 KC/S
4. L/B PORTABLE RADIO EQPT, W -M, 500 6273 & 8364 KC/S

5 6 7 8 9 10 11 12

RADIO ROOM

13. SPARE MF RT AND H/F XMTR, "RFT" 100 WATTS, A1 A2 & A3, 410 - 512 KC/S, 2 - 4 MC/S AND HF 2 - 16 MC/S.

14. CONTROL AND CHARGING PANEL.

NO VHF EQPT SEEN AND OPERATOR CLAIMS NOEN CARRID.

13 14

2

5. MAIN XMTR, 5A ECHA, CB, #0822, 250 WATTS, A1 & A2, 365 - 550 KC/S.
6. MAIN RCVR, BO/7HA-K, #19625778, 12 KC/S - 23 MC/S
7. SPARE RCVR, SAME AS ITEM 6 #19612564.
8. ANTENNA C/O SWITCH
9. EMGY XMTR, AC/7-4, #788, 60 WATTS, 410 - 512 KC/S, 24 VOLT BAT SUPPLY, A2.
10. EMGY RCVR, 17AC-2, 380 - 600 KC/S, 24 VOLT BAT.
11. AUTO ALARM, A7M-54, #813, 1963r, 500 KC/S.
12. AUTO KEYING DEVICE, NO MARKINGS OR TYPE SHOWN.

3 4

SECRET

SECRET
JIB(CAN) 5/66

XI(d) U.S.S.R.

SHIPPING - Electronic Reports
Trawler ZARAJZK, Halifax N.S.,
31 January 1966

1. The Soviet refrigerator trawler ZARAJSK (RTM 7065) was inspected at Halifax 31 January 1966. Her callsign is UTKH; port of registry, Kaliningrad; owners, USSR; tonnage, 2435 gross and 1070 net; one radio operator carried; safety radio certificate expires Nov. 31 (sic), 1966.

Date of Report: 4 March 66
Source: DGI/INT S

VISUAL INSPECTION OF
ANTENNA SYSTEM

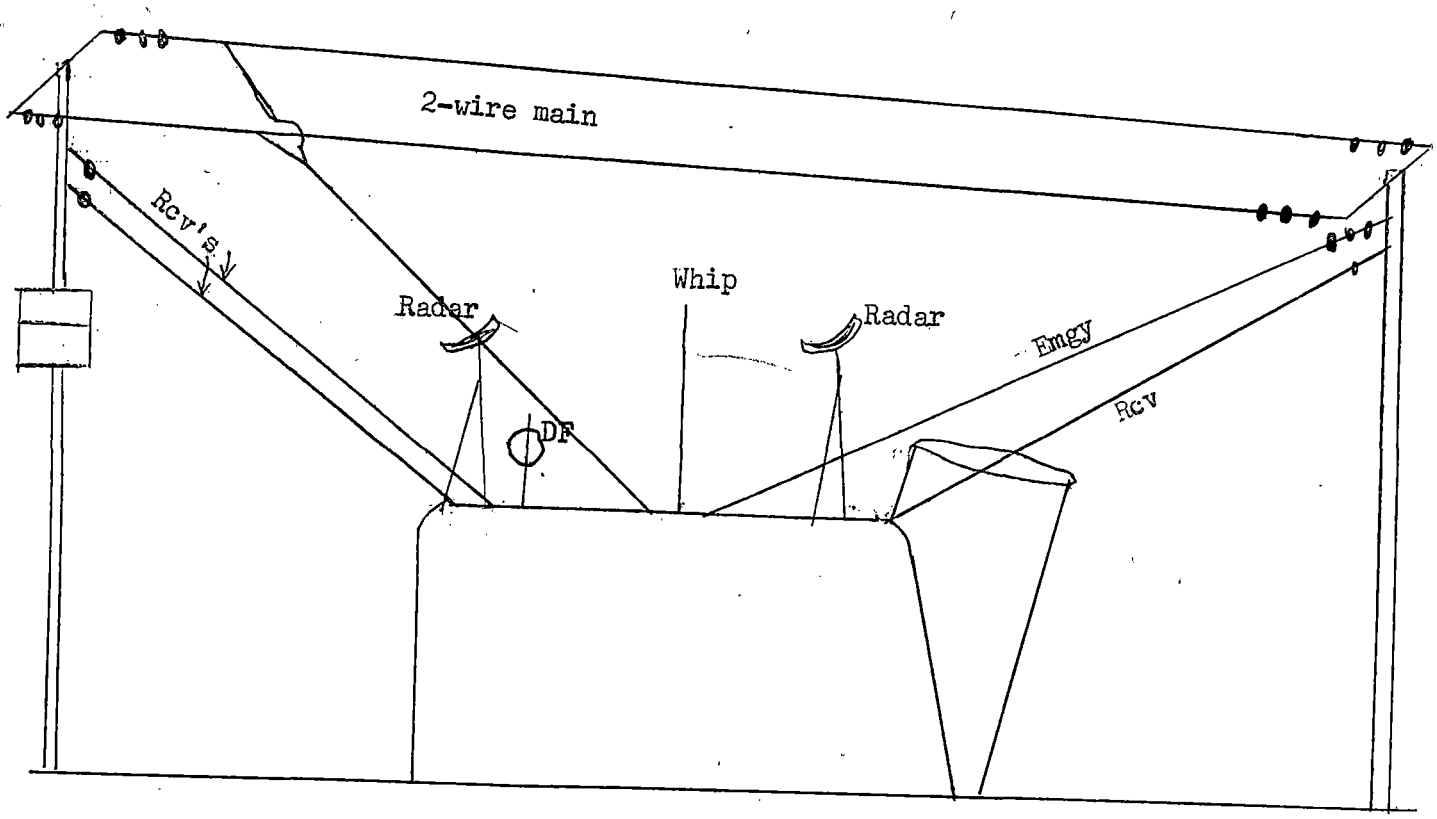

SECRET

(Trawler ZARAJSK
electronic report)

SECRET
JIB(CAN) 5/66

EQUIPMENT CARRIED

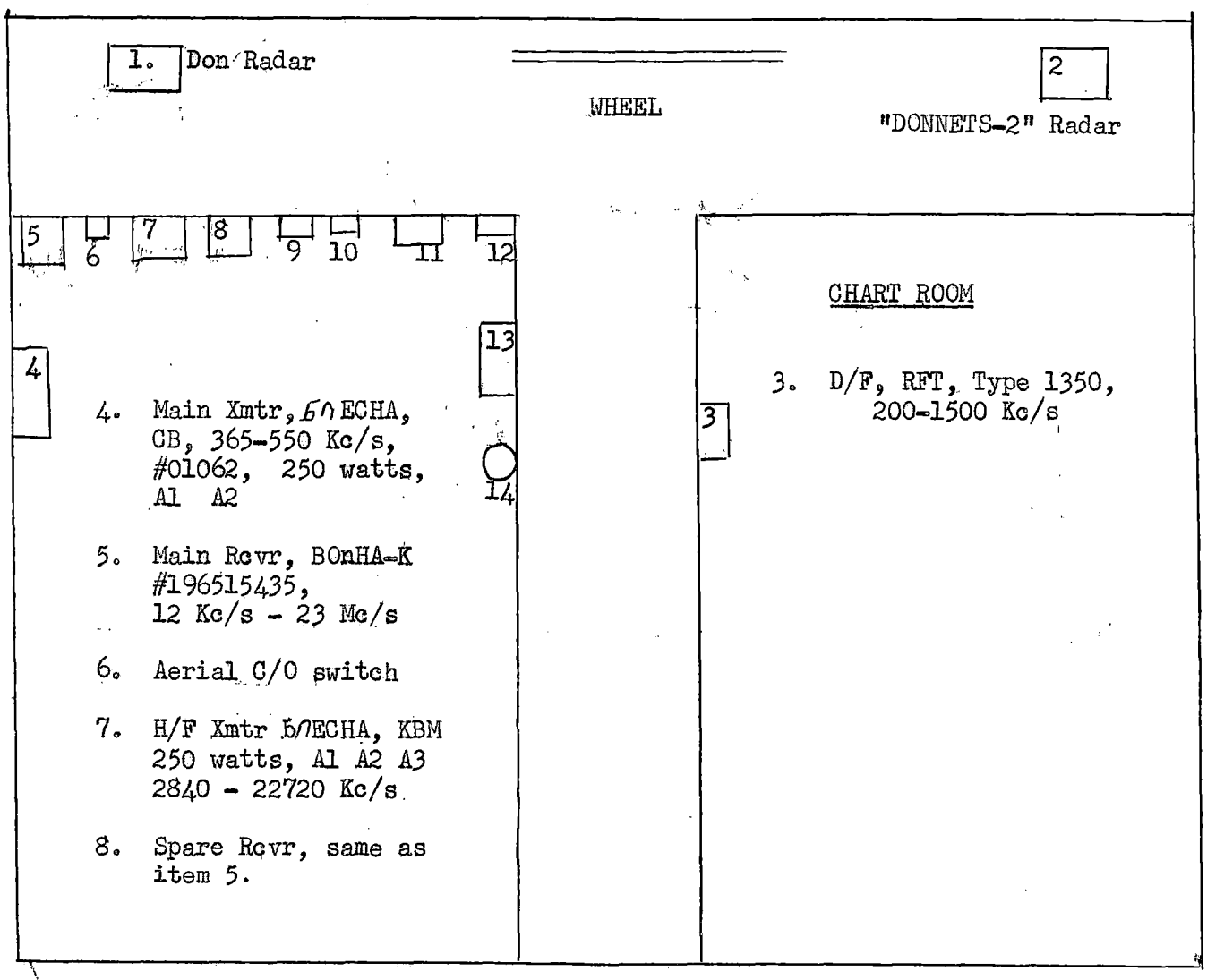

(9) Auto Alarm, AnM-3

(10) Auto keying device, Russian made, no model or number

(11) Emgy xmtr, ACn-4, 60 watts, A2, 410-512 Kc/s, 24 volt battery supply

(12) Emgy rcvr, ПА..?., 400-512 Kc/s, 24-volt battery supply

(13) Spare xmtr, rft, 100 watts, 1510.7F2, 405-3000 Kc/s, 3000-24000 Kc/s, A1 A2 A3

(14) Lifeboat portable radio equipment, War 3.M, 500 6273 8364 Kc/s, three additional units carried

CAN UK US EYES ONLY

JIB/CAN 6/66

SECRET

Copy No 19

JIB(CAN) 6/66

DATE 30 March 1966

JOINT INTELLIGENCE BUREAU
Ottawa

Communist Economic and Military Aid

Activities in the Less Developed Areas

February - 1966

JOINT INTELLIGENCE BUREAU

Department of National Defence

OTTAWA, CANADA

DISTRIBUTION

External Affairs (2 for D.L.2) (2 for Econ. Div)	1 - 3	Sec/EIC	13
Finance	4	JIB(O)LO(L)	14
Trade & Commerce	5 - 7	JIB(O)LO(W)	15
External Aid Office	8	RCMP	16
Bank of Canada	9	DGI/DSTI	17
National Defence College	10	JIB(O)	18
CBNRC (Library)	11	File	19
DGI (Library)	12	Spares	20 - 26

SECRET

CAN UK US EYES ONLY

Communist Economic and Military Aid Activities in the Less Developed Areas

February - 1966

Special Article

Communist Economic and Military Aid to Algeria

ECONOMIC AID

1. During a visit to Moscow in late 1965 by President Boumedienne of Algeria the Soviet Union reportedly assured him that it would continue to develop its economic aid programme in Algeria. Up to the present time Algeria has received a total of about $300 million in economic aid extensions from the communist countries, including $230 million from the Soviet Union, $50 million from Communist China, $14 million from Czechoslovakia and $6 million from Bulgaria. Of this sum, only $12 million has been drawn and the $6 million Bulgarian credit has been fully utilized to purchase plant for a textile mill and a tannery. The Soviet Union has provided some agricultural machinery and equipment for technical schools and Czechoslovakia has begun to supply equipment for a shoe factory. Czechoslovakia has also agreed to provide two 50 kilowatt transmitters and three of 150 kilowatts each. The 150 kilowatt stations are to be located in Algiers and reportedly will cover Europe and the Middle East as well as Africa.

2. The Soviet Union's aid consists of two credits. The first, valued at $100 million, was extended in 1963 and is being obligated for a wide variety of projects connected with agriculture and industrial development, as well as education and transportation. The second Soviet credit was extended in 1964 and is valued at $127 million. This loan is to be used to finance the provision of Soviet equipment and technical assistance in the establishment of a steel plant at Bone. Construction of the steel plant is expected to start this year. The Soviet Union has also agreed to provide financial and technical aid for a large irrigation project and to construct 28 small dams as its contribution to the irrigation scheme.

.../2

3. Algeria's trade with the communist countries is small when compared with its trade with France (about 80 percent of Algeria's total trade is with France) but it has increased during the past few years. For example, Algeria's trade with the Soviet Union has risen from $6 million in 1963 to $20 million in 1964. Algeria's exports to the Soviet Union in both of these years represent less than one-third of its imports from the Soviet Union and it is likely that there are similar trade deficits with some of the other communist countries. An interesting development in Algeria's export trade with the communist countries has been the sale of Berliet trucks manufactured in Algeria to Communist China.

4. It is estimated that close to 1,900 communist non-military technicians are currently employed in Algeria of which a considerable number are medical personnel. About 1,200 of the technicians employed in Algeria are from the Soviet Union, 600 are Bulgarians and the Chinese number about 100.

Military Aid*

5. During the period 1961-1963 the Soviet Union provided Algeria with an estimated $10 million worth of military equipment, most of it on a grant basis. This was followed by a major arms credit in October, 1963 valued at $100 million. In May, 1965 a further arms loan, estimated to be valued at $70 million, was extended by the Soviet Union. We have no information concerning the terms of the 1963 and 1965 loans but believe that the value of some of the military hardware purchased may have been discounted as much as two-thirds or may even have been extended as grant aid. In February, 1965 Communist China supplied sufficient arms to equip Algeria's militia forces. The value of this aid is roughly estimated at $5-$10 million and was provided as a grant. The total value of Soviet and Chinese Communist military aid to Algeria is estimated at about $185 million(US).

6. Deliveries of arms, contracted for under the October, 1963 agreement, reached their peak in 1964. There was an apparent hiatus in shipments in mid-1965 about the time of the overthrow of Ben Bella, but it is not known whether this pause was the result of a temporary political dislocation or merely represented the completion of deliveries under the 1963 agreement. Although the detailed provisions of the May, 1965, agreement have not been
/disclosed

.../3

.....

* See Table I for estimate of communist arms deliveries to Algeria

disclosed it is believed that it covered additional tanks, armoured personnel carriers, aircraft, naval vessels and surface-to-air missiles. Two of these missiles were displayed in November, 1965 during Algeria's Independence Day parade. Naval deliveries have included SO-1 class sub-chasers and PT-6 MTBs. Some KOMAR missile patrol boats reportedly may also be supplied under the 1965 agreement. An Algerian request in late 1965 for two submarines, a destroyer and a destroyer escort was apparently not approved by the Soviet Union.

7. Five or six CUB(AN-12) heavy transport aircraft were delivered to the Algerian Air Force early in 1965 and some helicopters may have been supplied at that time. There were no other aircraft deliveries noted apart from a gift of four COLT(AN-2) light aircraft from Communist China.

8. With the continuing deliveries of military aid from the Soviet Union to Algeria the number of communist military technicians in Algeria has almost certainly increased but we have no accurate information concerning the number currently located in Algeria. On the other hand it is known that at least 600 Algerian trainees were enrolled in military training programmes in the communist countries.

9. In the context of communist economic and military aid commitments in the less developed countries, particularly in the case of the Soviet Union, Algeria has assumed a fairly substantial role. Only five countries, the UAR, Indonesia, India, Afghanistan and Iran have received communist economic aid credits valued at more than Algeria's $300 million and out of a total of 24 countries receiving communist military aid only five recipients, UAR, Iraq, Syria, Indonesia and Afghanistan, have received more than Algeria's total of $185 million.

Part I Economic Aid

AFRICA

Kenya

10. A Kenyan government official announced recently that Kenya has rejected Soviet aid for the reason that this aid was offered in the form of goods which were unsaleable in Kenya. It is believed that this comment on Soviet aid probably applies to consumer goods offered by the Soviet Union for sale on local Kenyan markets to help finance the local costs of Soviet sponsored development projects. In addition, there are also signs that Kenya is dissatisfied with Soviet aid in general and some projects to be constructed under a $44 million credit extended in 1964 have been cancelled. (SECRET)

.../4

Guinea

11. Under an agreement signed in Conakry in February, 1966 the Soviet Union has agreed to provide assistance for Guinea's fishing industry including fishing vessels and experts to train Guinean fishermen. Guinea will also send 60 men to train in the Soviet Union. (UNCLASSIFIED)

MIDDLE EAST

UAR

12. Additional information has been received concerning the UAR's recent review of the economic feasibility of planned development projects (see JIB(CAN) 4/66 dated 22 February 1966). At least thirteen projects scheduled to be constructed under communist credits have been cancelled out or have been suspended indefinitely. Included are five Soviet projects as well as projects sponsored under credits extended by Poland, Czechoslovakia and Roumania. Other modifications desired by the UAR in planned projects were discussed with a Soviet economic delegation headed by the Chairman of the State Committee for Foreign Economic Relations in Cairo during January, 1966 and a forthcoming protocol may result in more changes. The cancelled Soviet projects include an agricultural machinery plant and four factories expected to produce roadbuilding machinery, electrical equipment and towers to carry electrical transmission lines. Equipment for three of these projects was to be provided under a Soviet commercial credit for $110 million extended in September 1964. The UAR expressed dissatisfaction concerning the high interest this credit carried and, so far, only a small portion of it has been utilized. At Soviet insistance plans to expand the capacity of the Helwan iron and steel plant have been cut back and instead of reaching a capacity of 1.5 million tons by 1970, one blast furnace will be added to increase the plant's capacity to 900,000 tons by 1969. The total capacity of 1.5 million will be reached in 1975 when a second blast furnace will be installed. (CONFIDENTIAL)

13. A compromise has been reached on the suspension of two sugar refineries to be constructed by Czechoslovakia, for which machinery had already been manufactured and shipped. One refinery will now be built and the other cancelled outright. (CONFIDENTIAL)

Turkey

14. According to Soviet press reports Turkey and the Soviet Union recently signed a trade protocol for the period April 1966 - March 1967. It was reported that trade turnover in 1966 will be doubled as compared with 1965. The value of trade between the two countries in 1965 is not available but in 1964 the turnover was valued at about $19 million(US) compared with about $20 million in 1958.

.../5

15. Under the protocol, the Soviet Union will supply Turkey with machinery and equipment, petroleum products, chemical fertilizers, cement, timber and newsprint. Turkish exports to the Soviet Union will include cotton, dried fruits, wool and tobacco. (UNCLASSIFIED)

Iraq

16. An Iraqi government official has announced plans for the construction of the Euphrates Dam at Hadissa with Soviet aid. According to a recent agreement the Soviet Union is to provide the material and equipment. The cost of the dam is estimated at about $140 million. When completed the project will allow for the irrigation of about 2.5 million acres. The scheme also provides for a hydroelectric power station. (UNCLASSIFIED)

Iran

17. The National Iranian Oil Company (NIOC) is to start delivering crude oil to Bulgaria in March, 1966. The NIOC will supply Bulgaria with 300,000 tons of oil annually in return for industrial equipment. One report indicates that Bulgaria intends to increase its crude oil imports from Iran to 500,000 tons during the next few years. In October, 1965 Roumania concluded a trade pact with Iran under which it agreed to purchase $100 million worth of Iranian oil over a ten year period. Iran is reported to be negotiating the sale of oil to other East European countries and to Japan and Pakistan. (UNCLASSIFIED)

ASIA

India

18. According to a US report Hungary has extended India a $50 million credit for India's Fourth Five Year Plan. Part of the Hungarian credit is believed to have been allocated for the construction of a large aluminum project in central India. Czechoslovakia is also reported to be prepared to discuss further aid commitments to India, in addition to a credit for $84 million extended at the end of 1964, for the fourth plan period.

19. Up to the present the Soviet Union has not committed itself to a specific sum but is reported to have agreed to provide aid for ten new large scale projects. The range and size of these projects would tend to confirm that substantial Soviet aid is likely to be forthcoming for the fourth plan. (SECRET)

20. The total value of communist economic aid to India is estimated at about $1.3 billion including $1 billion from the Soviet Union and $300 million from the East European communist countries. By way of contrast western countries have extended aid to India valued at about $9 billion, including foodstuffs, since 1957. (SECRET)

.../6

Singapore

21. Communist China recently purchased about 8,000 tons of rubber on the Singapore market and is expected to make additional purchases in the near future. (CONFIDENTIAL)

22. An eight man Soviet delegation visited Singapore on 10 March 1965 to discuss a trade agreement and to explore tha possibilities of participating in Singapore's industrial development programme. So far the reaction of the Singapore government to the Soviet Union's initiative has not been revealed. (UNCLASSIFIED)

LATIN AMERICA

Cuba

23. The Soviet Union and Cuba have announced the signing of an agreement under which the Soviet Union has agreed to extend a credit valued at $13.3 million to be used to expand the exploration for oil in Cuban territorial waters. Under the terms of the agreement the Soviet Union will provide a seismic exploration vessel to be used in a two-year geological study along the Cuban coastline. A previous geological study for the years 1964-1965 was financed out of a $100 million development loan extended to Cuba in 1960. (UNCLASSIFIED)

24. The 1966 trade protocol between Cuba and the Soviet Union was concluded in February, 1966 and is reported to have called for a 20 percent increase in trade between the two countries for a total of about $900 million. As in previous years the Soviet Union has provided a credit, $91 million in 1966, to cover the anticipated trade deficit. The Soviet Union has now provided Cuba with a total of about $1,350 million in credits including $950 million in trade credits and $400 million in development loans. (CONFIDENTIAL)

Part II - Military Aid

MIDDLE EAST

Iraq

25. More information has now been revealed about a Czech arms offer to Iraq. It was previously reported that they intended to offer 50 T-54 tanks but the /Iraqis are now

.../7

Iraqis are now reported to be in the market for 70 T-54s. In addition to the tanks a considerable range of small arms and artillery is said to have been offered, including 85 mm. anti-aircraft guns and associated radar and other equipment. It is also reported that the Czech Deputy Minister of Foreign Trade invited the Iraqi chief of staff to visit Czechoslovakia at any time. (SECRET - CANUKUS EYES ONLY)

ASIA

Pakistan

26. It has now been reliably reported that 32 Pakistani Air Force pilots and an unknown number of ground crew personnel have returned from training in China. The 32 pilots undoubtedly comprise the two groups of 16 each who went to China for MIG-19 training in October and December 1965. The first group returned in December and the second has apparently just arrived back in Pakistan. (SECRET)

TABLE I

Estimate of Communist Arms

Deliveries to Algeria

NAVAL SHIPS	
Motor Torpedo Boats	10
Patrol Craft	3
AIRCRAFT	
Light Jet Bombers	12
Jet Fighters	40
Piston Fighters/Trainers	20
Transport Aircraft	7
Helicopters	21
LAND ARMAMENTS	
Medium Tanks	240
Armoured Personnel Carriers	250
Self-Propelled Guns	50
Artillery Pieces	850
Rocket Launchers	450
MISSILES	
GUIDELINE (SA-2) SITES	some*

*TRAINING EQUIPMENT

TABLE II

Communist Economic Aid Extensions

February 1966

(million US$)

By	To	Project Aid	Other Loans	Total
Soviet Union	Iran	290.0		290.0
	Pakistan	20.0		20.0
	*Turkey	33.0		33.0
		343.0		343.0

*The value of the Soviet loan to Turkey in 1965 has been revised upward to $200 million, an increase of $33 million.

JIB/CAN/66/9

SECRET

Copy No 72

JIB(CAN) 7/66

DATE 30 April 1966

JOINT INTELLIGENCE BUREAU
Ottawa

ITEMS OF ECONOMIC AND TOPOGRAPHICAL

INTELLIGENCE FROM CANADIAN SOURCES

APRIL 1966

(Unevaluated Information)

JOINT INTELLIGENCE BUREAU

Department of National Defence

OTTAWA, CANADA

DISTRIBUTION

External Affairs (D.L.2)	1 - 2
DGI (DIA, 20	3 - 36
(NSA via DIA, 5)	
DGI/DSTI	37
CBNRC (Library)	38 - 39
DIS via JIB(O)LO(L)	40 - 44
FORD via JIB(O)LO(L)	45
JIB(A)	46 - 47
CIA	48 - 61
INR (State Dept)	62 - 63
Senior Military Advisor ICCS(Saigon) Indochina	64
JIB(O)LO(L)	65
JIB(O)LO(W)	66 - 70
JIB(O)	71
File	72
Spares	73 - 77

SECRET

SECRET
JIB(CAN) 7/66

SECRET
JIB(CAN) 7/66

ITEMS OF ECONOMIC & TOPOGRAPHICAL INTELLIGENCE FROM CANADIAN SOURCES.

March/April 1966

/(ii)

The Director JIB (Ottawa) would be grateful for any suggestions or comments that the recipients of this Summary may care to make.

NOTE: High grade prints of photographs in this publication may be obtained, or negatives borrowed, from the Director JIB (Ottawa)

EVALUATIONS

A. Completely reliable	1. Confirmed from other sources
B. Usually reliable	2. Probably true
C. Fairly reliable	3. Possibly true
D. Not usually reliable	4. Doubtful
E. Not reliable	5. Probably false
F. Reliability cannot be judged	6. Truth cannot be judged

SECRET
JIB(CAN) 7/66

I. ALBANIA

SHIPPING - Boarding Report
DURRES, 2 December 1965

1. While at DURRES, 2 December 1965, Source observed one destroyer, approximately 175 feet in length and 8 sub-chasers.

2. The eight vessels appeared to be active, entering and departing harbour intermittently. However, Source said that their ship handling was pathetic to observe.

Report & Date: WC/DBR 12/66 of February 1966
Source: DGI/INT S

SECRET
JIB(CAN) 7/66

II. BULGARIA

SHIPPING - Merships
Tanker ISKAR, Vancouver,
2 Feb 66

1. The Bulgarian Tanker ISKAR (callsign LZEV) was in Vancouver 2 February 1966.

General Impressions of Ship and Crew

2. The crew is composed of 43 Bulgarians and a Japanese Overseer, who is the liaison officer for the Osaka Shipyards which had recently constructed this vessel.

Date of Report: 7 April 1966
Source: DGI/INT S

SECRET
JIB(CAN) 7/66

III. CHINA

SHIPPING - Boarding Report
CHONG JIN, 30 Jan-14 Feb 66

1. CHONG-JIN is adjacent to SEISEN-KO. The Chart used in this report is BA Chart 1271.

Port Information

2. Source was of the opinion that Kimchat Steel Works (Appendix "A") had been blitzed during the Korean War, was in full operation and probably the largest steel works in Korea.

Security

3. All ship's navigational aids such as radar and echo sounder were prohibited. The use of binoculars, sextants, cameras, etc., was forbidden and they were required to be locked up.

Report & Date: WC/DRB 10/66 of 23 March 1966
Source: DGI/INT S

SECRET
JIB(CAN) 7/66

Appendix "A"

(CHONG JIN)

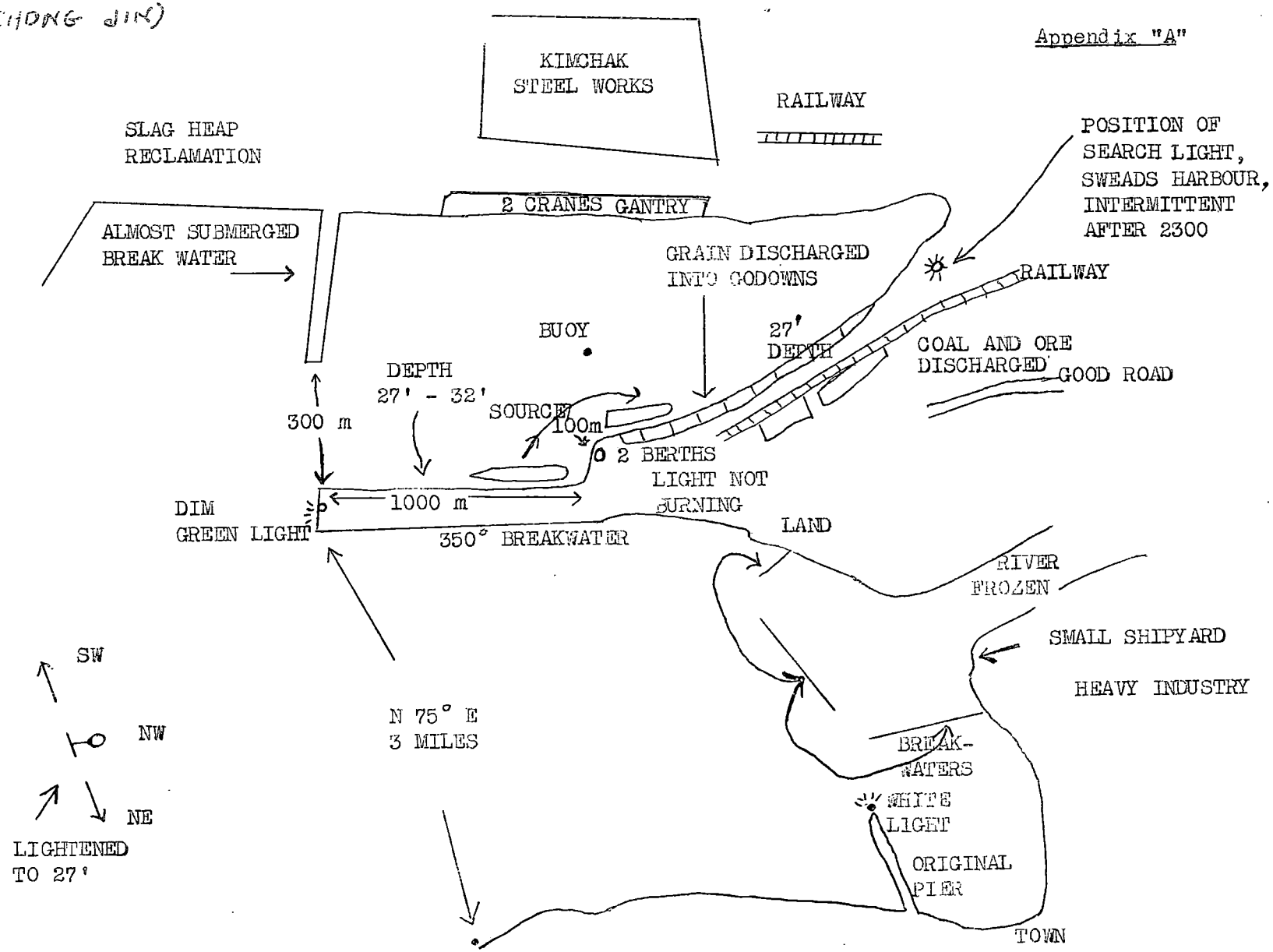

NOT TO SCALE

SECRET
JIB(CAN) 7/66

IV. CHINA

SHIPPING - Boarding Report
SHANGHAI, 30 Dec-4 Jan 66
and 9-18 Feb 66

Period of Time
30 Dec 65-4 Jan 66

Port Information

1. Source observed that the concrete pier is being completed from CHANG-HUA-PANG dockyard to the creek, YUEN-TSAO-PANG. This wharf is located on the South side several miles upriver from Woosung.

2. Discharge was effected at CH'I-CH'ANG West Wharf. This wharf is located one down from the ferry slip. Storage space for the shed on this wharf is estimated at 30,000 tons. Source is of the opinion that this grain storage wharf appears to be the only one in the Shanghai area capable of storing in excess of 25,000 tons.

3. Twenty-five to thirty small unit evacuuators were utilized to discharge source's ship and one floating unit. The floating unit discharged the grain into approximately a 9,000-ton double barge. When the barge was loaded it proceeded up river, destination unknown.

Shipping Information

4. During source's stay in port he observed 3 Chinese coastal vessels approximately 6,000 tons. The remainder of the merships in port were of foreign registry.

5. Source also observed that numerous small coastal vessels have been stripped to the hull. The hull however was being utilized and a new superstructure was being added to replace the old one.

Period of Time
9-18 February 1966

Sightings

6. Sighting "A". Only coastal merships in KIANG-NAN Shipyard

7. Sighting "B". At CHU'IU-HSIN SHIPYARD. (JIB Plate IV - Shanghai). A vessel approximately 175 feet, Type Hull #113 was observed. Lying alongside was a submarine approximately 200 feet in length. Source could not further elaborate.

(Shanghai 9-18 Feb 66)

SECRET
JIB(CAN) 7/66

Sighting Cont'd

8. Sighting "C". At TUNG-CHIA-T'U UPPER WHARF. (JIB Plate IV - Shanghai). This wharf are appeared to be naval; 12 small escort ships and one LST, doors opening in front - conning tower aft approximately 300 feet in length.

9. Sighting "D". At HUA-TUNG SHIPYARD. Source observed a depot ship in excess of 300 feet. In addition he is of the opinion small armed craft are constructed in this area.

Report & Date: WC/DBR 7/66 of 28 Feb 66
WC/DBR 12/66 of Feb 66

Source: DGI/INT S

SECRET
JIB(CAN) 7/66

V. CHINA

SHIPPING - Boarding Report
TSINGTAO, 5-7 Feb 66

1. During 5-7 February 1966, Source made the following observation:

Sighting "A" - Supply Ship at #5 Mole (JIB Port Plan TSINGTAO)

Sighting "B" - LST at #5 Mole

Sighting "C" - Four submarines. These were all larger than the one observed at SHANGHAI a week later. The last digit was observed - #6, and was on the outboard submarine

Sighting "D" - There were 5 Flying Boats just north of YUNUI SHAN. Two were at the base depot and three at the hangar area.

Report & Date: WC/DBR 12/66 of Feb 66
Source: DGI/INT S

SECRET
JIB(CAN) 7/66

VI. CZECHOSLOVAKIA

INDUSTRY - Chemical Works
Semtin, 15 March 1966

1. The British and Canadian Air Attaches made the following observation during a tour on 15 March 1966.

SEMTIN Chemical Works (Q12) (WR530460)

2. At 1350 hours, it was not possible to linger in this area because there were many people and vehicles moving about. The plant is fairly big and appears to be quite operational. There are two or three large, several-storied brick buildings and some smaller buildings. One stack was emitting a green-coloured effluent. At the West side of the plant there is considerable construction going on.

Evaluation: A-2
Report & Date: IR 6/66 of 16 March 66
Source: CAA/Prague

SECRET
JIB(CAN) 7/66

VII. U.A.R.

MARKINGS - Aircraft
AN-12s, 17 March 1966

1. There have been some recent changes in UARAF holdings of AN-12s. There are now 20 of this type which have been identified by the Arabic numbers on the sides. The five aircraft on loan from the USSR numbered 1208 - 1212 have disappeared. These were painted differently from those of the UARAF and were easily distinguishable.

2. Numbers held as of this date are:

1201, 1202, 1206 and 1215 through 1231 making a total of 20.

Evaluation: A-2
Report & Date: IR 19/66 of 17 March 66
Source: CFA/Cairo

SECRET

SECRET
JIB(CAN) 7/66

VIII. U.S.S.R.

AGRICULTURE
Baku area, 16-18 March 66

1. The Canadian Naval Attache made a trip to BAKU, 16-18 March 1966, accompanied by two Australian Naval Attaches.

2. No foot and mouth precautions were observed in Baku. It was said to be an early Spring. Market was visited and had spinach, water cress, some tomatoes and cucumbers, apples, carrots, spring onions. There was no shortage of meat or eggs. Very few flowers. An enquiry revealed no cotton is grown locally.

Report & Date: IR N43/66 of 21 March 66
Source: DGI/INT S

SECRET
JIB(CAN) 7/66

IX. U.S.S.R.

ECONOMICS - New Housing
Baku, 16-18 March 1966

1. The Canadian Naval Attache was in Baku on a trip, 16-18 March 1966.

2. Some 100-200 new apartment blocks were seen in the micro rayons to the NW and W of the city. The taxi driver said they were 2 and 3-room apartments each with bathroom and kitchen. The newer are made of precast cement forms and walled with a local easily quarried stone.

3. Some years back a French Company built flats and the results were appalling even by Russian standards. Locally anything described as "French" means "Badly built". Source observed inwardly that some 3-year old flats of the good type seemed 20 years old. No landscaping is provided for these flats and effect is very much skid row.

Report & Date: IR N43/66 of 21 March 66
Source: DGI/INT S

SECRET

SECRET
JIB(CAN) 7/66

X. U.S.S.R.

ECONOMICS - Oil
Baku, 16-18 March 1966

1. While the Canadian Naval Attache was in BAKU on a trip, 16-18 March 66, with two accompanying Naval Attaches (Australian), he observed oil fields in the area.

2. The haphazard way oil derricks are strewn, operated or discarded in this large field is incredible. About ½ of derricks seemed to require pumping, the remainder were abandoned or possibly still yielding by gas pressures. No gas venting was seen however. Some new wells, (or old wells being reamed out) were being drilled. The taxi driver pointed out the factory that makes the famous fast drilling oil equipment exported to many countries; it is located on ULITISA CHAPAEV.

Report & Date: IR N43/66 of 21 Mar 66
Source: CNA/Msocow

SECRET

SECRET
JIB(CAN) 7/66

XI. U.S.S.R.

INDUSTRY - Factory
Viborg, 3 Dec 65

1. The Canadian Military and Naval Attaches made a routine visit to Leningrad, then proceeded to Helsinki, 2-3 December 65.

2. Between VIBORG and the border, an unlisted installation was observed paralleling the tracks on the left hand side some 6-8 kilometers North West of Vyborg. From all outward appearances it is a construction materials factory. In those areas not hidden by a high wooden fence large quantities of precast concrete slabs and various other forms were observed as well as a creosoting operation (large poles). What is interesting is that it appears to be operated by construction troops of whom several were observed. Some 10 - 12 cargo vehicles with military VRNs were also observed in the complex. At the far end, lying on a siding was observed what is believed to be an overhead travelling, shop-type, crane estimated sixty feet in length. It is understood that it has been lying exposed in this location for approximately two months.

Report & Date: M86/65 of 14 Dec 65
Source: CMA/Moscow

SECRET

SECRET
JIB(CAN) 7/66

XII. U.S.S.R.

TOPOGRAPHICAL INTELLIGENCE
Military Train, Moscow,
18 March 1966

1. On the Leningrad Highway, just where it crosses the Moscow River, a military train was observed at 1815 hours on 18 March 1966.

2. It was proceeding parallel to river at high speed, proceeding in a NE direction (away from city) a fleeting view was obtained but could not be prolonged as the driver was Russian.

3. However weapons, one to a flat car, and at least three of them, were seen.

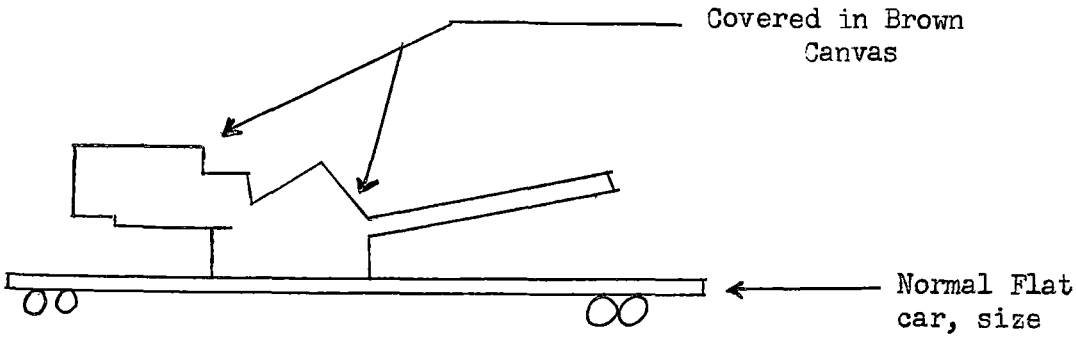

4. There were associated trailers on other flat cars; it is tentatively assessed as SAM 2 projector or transporter.

Report & Date: IR N43/66 of 21 March 66
Source: CNA/Moscow

SECRET

XIII.

U.S.S.R.

TOPOGRAPHICAL INTELLIGENCE
Road Trip Moscow-Tashkent
30 Nov-5 Dec 1965

1. The Canadian Air Attache made a trip MOSCOW-ALMA ALTA-TASHKENT-SAMARKAND-TASHKENT-MOSCOW, 30 November-5 December 1965.

Flight SU331, 2100 hrs - MOSCOW-ALMA ATA, 30 Nov-1 Dec.

2. Source drove much of the way to Domadyevo airport in thick fog and was escorted out to his aircraft about 2040 hrs. It was dark and misty enough that little could be seen. On the way to the aircraft he passed several IL-18s, one bearing the number 42 408, and one Camel. The number of his aircraft was effectively obscured. He was given a seat by a window over the wing, had a fairly pleasant but typically cramped trip with a plain slightly over-cooked meal, and saw nothing of interest.

3. He arrived at Alma-Ata also in darkness, made out a Colt, several Crates, and a Cab and was whisked away by Intourist to a waiting car, still without getting his aircraft number.

Alma-Ata, 1 - 2 Dec

4. He arrived at Alma-Ata at 0300 hrs Moscow time.

5. After a light breakfast about noon local time Source set out on foot to see some of the places of interest. JIB numbers included in this section of the report are keyed to Town Brief 125/63.

OBSERVATIONS

JIB	ITEM
52	Hotel Kazakhstan is on the corner of Ul. Pastera (name not checked) and the N-S street shown on map only as PROSPECT. The actual name of this street is roughly "Kommunistecchiskaya".
-	Jeep wr 89-54 was parked outside a government building on the E side of "Komm", between Gor'kogo and Oktyabr'skaya.
93	Saw only a single university building - believe sign on door said "agriculture". Through a basement window saw a number of young men, wearing head-sets, sitting at tables. Uncertain whether this is part of main university.

(Moscow-Tashkent trip
Nov-Dec 65)

SECRET
JIB(CAN) 7/66

JIB	ITEM
-	Looking S past the opera house (located just S of JIB 99) saw the top of a tall lattice tower. (This was later identified by an Intourist driver as a TV tower).
-	Looking just S of E past the Monument (located above JIB 113) saw a dark solid looking structure on top of a nearby mountain. It was in haze, appeared rectangular with a slightly peaked roof, and had no visible protuberances.
120	Could not clearly identify bounds of this serial. Shortly after heading S from Monument, passed by an extensive fenced park-like area, then came to a road going W from Pros. Lenina. Just S of this road were five barrack-type blocks, two of them apparently newer than the others. These were in groups of two and three, separated by an expanse of what looked like newly graded land. Just S of the buildings were a 30 - 40 foot mast with two circular dishes (facing roughly N and NNE) located near the top and a 50 foot mast with a short horizontal bar located near the top. In the vicinity was a stake truck bearing the number 20-25 HL, other vehicles with suffixes XE and OE.
123	Close to Lenina (on the W side opposite street number 160) in the northern part of the area were 2 FORKREST, 1 MERCURY GRASS. Visible further W was a PALM TREE. A little further S were a forest of masts, most plain, some with single horizontal members and a maze of horizontally strung wires and caged dipoles.
130	Source continued S along or past JIB 130. S of a building W side of street which contained in part a bread shop saw a further antenna farm, with its masts and wires only partly visible in the darkening early evening mist.
-	Back to the Monument on foot, then to the hotel by taxi.

6. The next morning Source walked W along Komsomol'skaya past the Foreign Languages Institute (JIB 86) and the Medical Institute (JIB 87) and, making a short detour to the S, saw several groups of students moving about in the area. Returning to Komsomol'skaya he walked W past the main university building on the S side of the street (or at least the one pictured in the current tourist pamphlet). He crossed the street, probably at Kosmonavtov and returned E on Komsomol'skaya. A new building being constructed across from the main university building was the only one seen on the N side of the street that had any university look about it.

7. After a short lunch he hired an Intourist car and driver to show the local sights. The tour also took us to a vast new housing development on the SW edge of town which lay immediately S of an extensive fabrichniy kombinat. The tour culminated in a run south down Lenina (along Bus route number 5) well past JIB 120, 123, and 130, past a cluster of 8 - 10 vertical masts grouped in no discernible pattern co-located with a small building (may have been JIB 131; the position is reasonable), past a barricade up into sunshine in the mountains. Nothing further of interest was seen from then till return to the hotel and onward transport to the airport.

Flight - SU-2202, 1440 hrs - Alma Ata to Tashkent, 2 Dec

8. At Alma Ata Airfield (JIB 5) saw:

16	IL 18, including 75812 and 75768 (in which we flew)
8	IL 14
6	Cab
2	streamlined twin-prop (looked like Friendships)
2	One Eye
2	Cross Out
1	possible HAY WAIN grouped with a few masts and other U/I equipment.

9. The flight left at 1740 hrs local time and the fight to Tashkent was completed in darkness with nothing seen except a number of IL-18s and IL-14s.

Tashkent - 2-3 Dec

10. An unproductive interlude.

Flight - Tashkent to Samarkand 3 Dec - Flight SUY33, 0740 hrs

11. At Tashkent Airfield South (JIB 90) Source saw no new construction or new aircraft types. Saw only many IL-18s, IL-14s and Cabs and one Cub. He travelled in IL-14 41896.

12. The flight departed at about 1640 hrs and although he got good seats because he was told to sit where he liked, he was above an unbroken layer of cloud all the way and saw nothing.

Semarkand 3-4 Dec

13. He stayed in the Hotel Samarkand (Intourist) which Source is unable to pinpoint definitely. It was one block WSW of Lenina, seaprated from Lenina by a park, with an idle ferris wheel and other midway rides immediately to the rear (ENE) of the hotel. He estimated that it is slight less than half-way between Uzbak and M. Gorikogo on the N side of the street (possibly Sovetskaya). Street names are based on map contained in an un-numbered town brief.

(Moscow-Tashkent trip
Nov-Dec 65)

14. In Samarkand, Source concentrated on looking for traces of the presence of tank forces in the area. On the evening of arrival from about 1800-1945 hrs local he strolled along Lenina (that he had been told was the main shopping area) for several blocks and into those shops that were open. He saw quite a number of soldiers, some in the shops, but most on the dark streets. Of the many who passed close enough, Source saw only one who might have been wearing the tank insignia. In a glass counter in the only military tailor shop, he saw a tray containing assorted lapel badges including about 12-16 tank badges, a quantity about equivalent to that of each of the other six or seven types also displayed.

15. The next day he took the Intourist tour and although again he saw a number of soldiers, saw none wearing the tank insignia, nor saw anything else from his travels or assorted vantage points that suggested the presence of a tank formation. The only thing of interest seen was what appeared to be an electronics installation on top of a ridge of hills several miles ENE of the ancient observatory of the grandson of Tamerlaine (Ulyubek). Later, on take-off from Samarkand he caught a brief glimpse of an installation that was thought might be the same one on top of a ridge of hills just S and perhaps one mile E of the airfield. He saw this as a dark, cylindrical tower about 30 feet high with 2 or 3 slightly higher masts close about it and a small hut with a cluster of 4 or 5 similar pole masts a short distance to the W, (he viewed it looking S) but was also seen as a low flat-roofed hut amidst a group of vertical masts, some with horizontal members.

16. On the drive to the airport a few minutes before reaching it, close by on the left side of the road he saw 2 BAR LOCK, 1 SPONGE CAKE and 4 FORK REST.

Flight - Samarkand to Tashkent - 4 Dec Flight ?, 1645 hrs

17. On the field source saw only a large number of Colts, a number of old, smaller monoplanes, similar in appearance to the Colt, and his IL-14 (number 61722).

18. There appeared to be three parallel runways on the field running roughly E-W. He was fairly sure he landed on a surfaced strip which he would identify as the centre one. The one to the S, only a few yards removed from the centre one, appeared under construction and was recently and only partially graded. The third was not a clearly defined strip but consisted of a slightly bumpy, rolled dirt area immediately on the N side of the centre strip - it was along this area that they took off.

19. Once again he had a window seat, at the front on the starboard side, but saw nothing of interest for the few minutes before being again over a solid layer of cloud.

Tashkent, 4-5 Dec

20. In Tashkent with his car laid on to leave the Tashkent Hotel at 1030 hrs the next morning he decided the only thing he would try to do was visit the cemetary for a look at Tashkent (East) Airfield. Later he was able to identify the Tashkent Hotel as JIB 134, Town Brief 126/63, street number 50, Ul. Lenina.

Flight SU 416, 0845 hrs - Tashkent to Moscow, 5 Dec

21. The aircraft composition at Tashkent seemed basically the same as previously. Source flew in IL-18 75818 (the last digit being uncertain because of partial shielding). IL-18s 75565 and 75570 were also noted. He was assigned seat with one next to a window just at the trailing edge on the port side (seat 11a), the take off was at 1200 hrs local, nothing of interest was seen even during the occasional short stretches when there was no cloud below.

Part III - Administration and Surveillance

22. Generally speaking, apart from the few delays and inconveniences mentioned in Part II, the Intourist service was excellent. On the two occasions when Intourist cars were not provided, they obtained taxis for him. His large suitcases were checked, claimed, and carried for him at all air terminals and a porter usually helped carry at the hotels. On several occasions the Intourist representative helped to order meals and probably would have done so oftener if requested.

23. Surveillance, if present, was extremely discreet. On two occasions in Alma-Ata he thought he identified shadows but on each occasion they did not stay with

Report & Date: IR-A200/65 of 9 December 65
Source: CAA/Moscow

SECRET
JIB(CAN) 7/66

XIV. U.S.S.R.

SHIPPING - Shipyards
Parizhskaya Communa Shipyard, 16-18 March 1966

1. The Canadian and two Australian Naval Attaches made a trip by air, MOSCOW-BAKU-MOSCOW, 16-18 March 1966, during which they made the following observation.

PARIZHSKAYA COMMUNA Shipyard, Baku

2. Observed were two 5000-tons, one 2000-tons, passenger ship, 8 cargo ships from 8000 tons to 2000 tons (all in overhaul), naval auxillary (possible SEKSTAN No. 7200) in drydock. Large floating dock had a ship of 2-3000 tons with large crane as superstructure. Shipyard foundry had just cast a number of approximately ½ ton admiralty-type anchors.

3. No submarine activity was seen. It would be most difficult to hide such work in this shipyard, since it is very visible from the KIROV monument.

Report & Date: IR N43/66 of 21 Mar 66
Source: CNA/Moscow

SECRET
JIB(CAN) 7/66

XV.

U.S.S.R.

SHIPPING - Merships
Cargo Ship BIJESK,
Halifax 10-26 March 66

1. The Soviet cargo ship BIJSK (callsign UYEQ) was in Halifax 10-26 March 66.

2. The ship was described as being beautifully furnished inside even in comparison with the well appointed accommodation of modern merchantmen.

3. All the crew, both officers and men, were very well dressed in good quality clothing, and had above average deportment. One competent observer remarked that the ship's personnel appeared to be as military men rather than merchant seamen.

4. The ship's number 4 hatch and hold are much larger than is usual for such a ship. When the cargo of flour was loaded 3,658 tons were embarked in this hold.

Personalities - Captain

Name:	EVGENY LYSENKO
Height:	5 ft. 8 in.
Weight:	150-160 lbs.
Eyes:	hazel
Hair:	dark blonde-long, bushy and curly
Complexion:	swarthy
Facial Features:	deep furrowed forehead - silver filling front upper teeth
English:	good
Other features:	Extremely well groomed - very smart in appearance and bearing.

Date of Report: 7 April 1966
Source: DGI/INT S

SECRET

SECRET
JIB(CAN) 7/66

XVI.

U.S.S.R.

SHIPPING - Fishing Fleets
Water Tanker GROZNIY,
Halifax, March 1966

1. The Soviet water tanker GROZNIY (callsign UQNZ) was in Halifax 12-13 March, 20-22 March and on 28 March 1966.

Personalities:

2. The Captain on the first and second visit was Ermolin METODY.

Name:	ERMOLIN METODY
Height:	5 ft. 8 in.
Weight:	150 lbs.
Eyes:	dark blue
Hair:	light brown - very thin on top
Complexion:	reddish, weather-beaten appearance
Facial Features:	gaunt, very thin-2 gold teeth upper left - 2 teeth missing lower front
English:	fair

3. This Captain, between the first and second visits, whilst at sea, received an injury to the head at the temple. During the second visit he attended the DVA Hospital at Halifax for examination and treatment. After proceeding to sea after the second visit he was relieved by another Captain, the injured Captain being transferred to a vessel proceeding to the USSR.

4. The Captain on the third visit was Alexy VEPREZ. He stated that he had been fishing on the Georges Bank area since 1951.

Name:	ALEXY VEPREZ
Height:	5 ft. 8 in.
Weight:	150 lbs
Hair:	blonde-thin on top receding at temples
Complexion:	light
Other Features:	attractive appearance
English:	fair

Date of Report: 7 April 1966
Source: DGI/INT S

SECRET
JIB(CAN) 7/66

XVII.

U.S.S.R.

SHIPPING - Fishing Fleets
Visit of Refrigerated-Fish
Transport SAJDA, Halifax, 18-20 March 66

1. The Soviet refrigerated-fish transport SAJDA (RR 1279) was in Halifax 18-20 March 1966.

Personalities

2. The Captain is Mikhail OTVODENKO, formerly Chief Mate of the Soviet Water Tanker KARTALY.

Name:	MIKHAIL OTVODENKO
Height:	5 ft. 8 in.
Weight:	165 lbs.
Hair:	Dark
Facial Features:	Sallow complexion. Thin pointed nose; 2 upper eye teeth are bold
English:	Fair

Date of Report: 7 April 1966
Source: DGI/INT S

SECRET

SECRET
JIB(CAN)7/66

XVIII. U.S.S.R.

SHIPPING - Electronic Report
Mership VEREIA, Halifax, 25 Feb 66

1. The Soviet mership VEREIA was inspected in Halifax 25 Feb 1966. Her callsign is UKXG; port of registry, Leningrad; Official No., M-27633; owners, USSR; and gross tonnage 17,900.

2. On the following pages are diagrams of visual inspection of antenna system, and placement and listing of equipment.

Date of Report: 14 April 1966
Source: DGI/INT S

(Soviet mership VEREIA
Halifax 25 Feb 66)

SECRET
JIB(CAN) 7/66

VISUAL INSPECTION ANTENNA SYSTEM

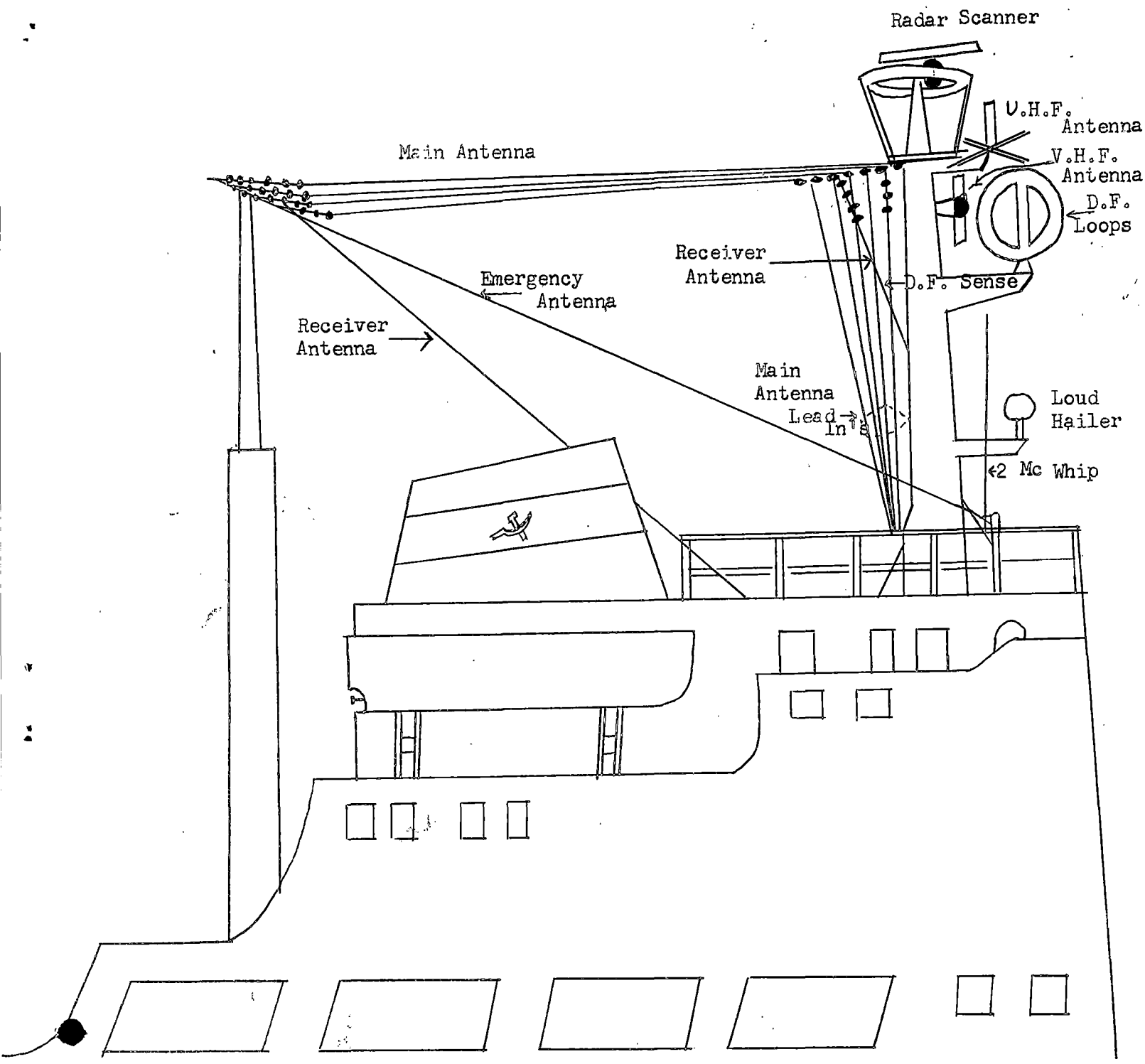

SECRET

(Soviet mership VEREIA,
Halifax 25 Feb 66)

SECRET
JIB(CAN) 7/66

EQUIPMENT

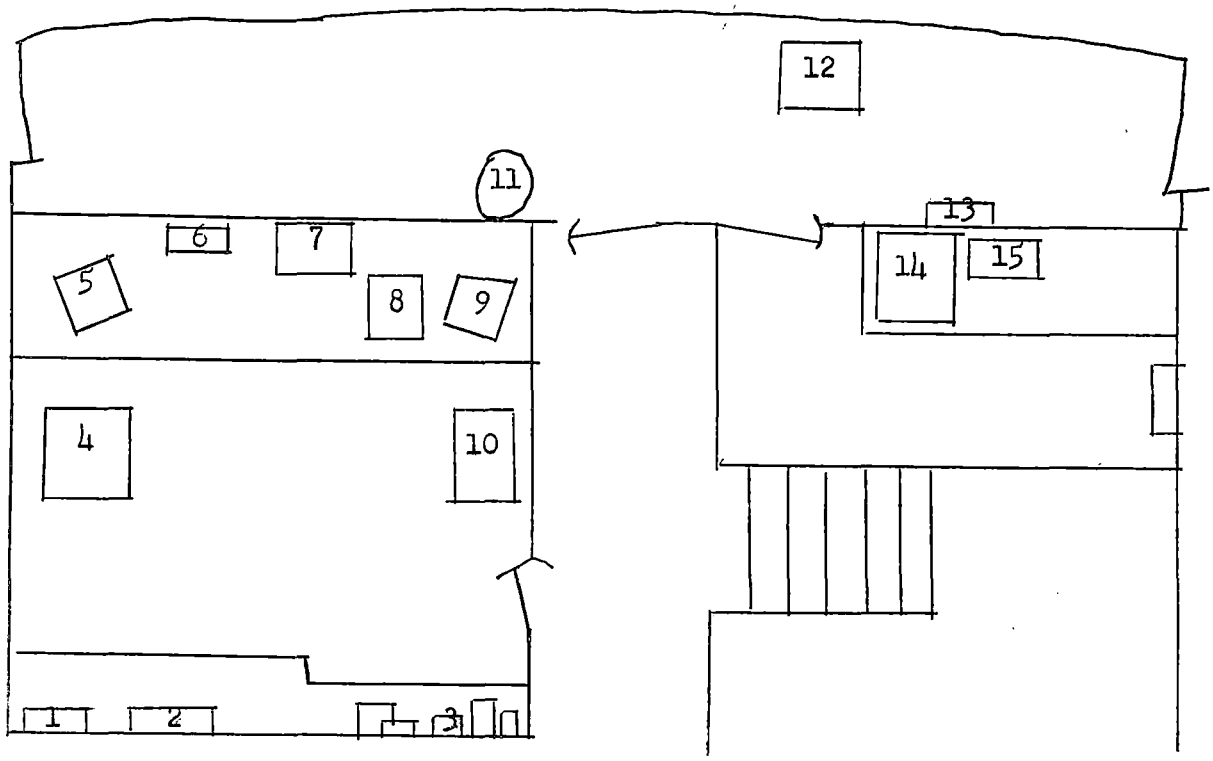

1. BATTERY CHARGING AND EMERGENCY POWER CONTROL PANEL.
2. AUTOMATIC ALARM, MAKE: NOT SHOWN, MODEL: АлМ-54п.
3. V.H.F. TRANSMITTER, RECEIVER & POWER SUPPLY, MAKE: NOT SHOWN, MODEL: AM-A.
4. MAIN TRANSMITTER, MAKE: СУАОВОЛЕРЕАДАТУИК, TYPE: ВОЛХОВ, NO. 0132, 400 - 535 Kc/s, 300W. A1, A2.
5. MAIN RECEIVER, MAKE: СССР, TYPE: ВОЛНА-К, 12 Kc - 23 Mc., NO. 196515475.
6. EMERGENCY RECEIVER, MAKE: НАСТРОЙКА, САЕЛАНО, В СССР, TYPE: ЛАС - 3, N440, 400 - 550 Kc/s.
7. EMERGENCY TRANSMITTER, MAKE: РАДИОП ЕРЕАДАТУИК, TYPE: АСП - 4, N217, 80 W. 410 - 512 Kc/s.
8. SPARE RECEIVER. SAME AS NR. 5 ABOVE. NO. 196515456.
9. EXPERIMENTAL RECEIVER. SAME AS NR. 5 ABOVE, NO. 196516785.
10. SHORT WAVE TRANSMITTER, MAKE: СУАОВОЛЕРЕАДАТУИК, TYPE: ИПБ МЕНБ, 300 W., NO. 0119, 3 - 24 Mc/s OR 1.5-24 N
11. LIFE BOAT TRANSCEIVER, MAKE: NOT SHOWN, TYPE: ШЛЮП - M, 500, 6273 & 8364 K.
12. RADAR, MAKE: NOT SHOWN, TYPE: ЛА.
13. U.H.F. TRANSMITTER & RECEIVER, MAKE AND MODEL NOT ON THE UNIT.
14. REPEATER UNIT FOR NR. 11. ABOVE.
15. DIRECTION FINDER, MAKE: NOT SHOWN, TYPE: СРП - 5. 186 - 750 Kc/s.
16. AUTOMATIC KEYING DEVICE AND POSITION KEYER, TYPE: АПСТ - 1M.

ONE RADIO OPERATOR CARRIED.
ALL CERTIFICATES VALID.

SECRET
JIB(CAN) 7/66

XIX

YEMEN

SHIPPING - Boarding Report
Hodeida, 24 October 1965

1. At HODEIDA, on 24 October 1965, Source observed a Soviet mership discharging 6 torpedo boats.

2. These boats were observed to be approximately 50 feet in length with single mounted torpedo tubes. An armed sloop and 4 small submarine chaser-type craft were also observed. Source could not elaborate.

Report & Date: WC/DBR 12/66 of Feb 66
Source: DGI/INT S

SECRET

SECRET

CANUKUS EYES ONLY

Copy No 19

JIB(CAN) 8/66

DATE 15 April 1966

JOINT INTELLIGENCE BUREAU
Ottawa

Communist Economic and Military Aid

Activities in the Less Developed Areas

March - 1966

JOINT INTELLIGENCE BUREAU

Department of National Defence

OTTAWA, CANADA

DISTRIBUTION

External Affairs (2 for D.L.2) (1 for Econ. Div)	1 - 3	Sec/EIC	13
Finance	4	JIB(O)LO(L)	14
Trade & Commerce	5 - 7	JIB(O)LO(W)	15
External Aid Office	8	RCMP	16
Bank of Canada	9	DGI/DSTI	17
National Defence College	10	JIB(O)	18
CBNRC (Library)	11	File	19
DGI (Library)	12	Spares	20 - 26

SECRET

CANUKUS EYES ONLY

Communist Economic and Military Aid

Activities in the Less Developed Areas

March - 1966

Special Article

Communist Economic and Military Aid to Tanzania

Economic Aid

1. The Republics of Tanganyika and Zanzibar became the object of a major communist economic offensive almost immediately following independence and the subsequent union of the two states into the Republic of Tanzania. Despite unification Communist China and East Germany have continued to deal directly with Zanzibar on some issues involving economic aid.

2. Up to the present time Tanzania has received economic aid valued at about $90 million including $28 million from the Soviet Union, a $42 million interest-free loan from Communist China and a total of $21 million from East Germany, Poland and Czechoslovakia.

3. Early in 1965 Communist China initiated several projects under its aid agreement with Tanzania including a broadcasting station, a textile mill, some state farms and a farm implement factory. A Chinese survey team is reported to have completed an inspection of the country to be traversed by the Tanzanian section of the Tanzam railroad. It is not clear, however, whether the Chinese have committed themselves to more than an inspection of the route. In addition to project aid Communist China also extended a $3 million grant to Zanzibar for budget support. So far only $6-7 million of the Chinese aid has been drawn, including the grant to Zanzibar.

4. Up to the present time little has been done concerning utilization of Soviet aid. Agreement reportedly was reached on the construction of two hospitals, schools and a telephone network. In addition, Soviet assistance for the development of Tanzania's marine fisheries was also discussed but no agreement appears to have been reached. In fact, discussions between Tanzania and the Soviet Union concerning Soviet aid have been long and bitter, with Tanzania reportedly rejecting the Soviet credit. According to a UK report, Tanzania has been holding out for easier repayment terms, adoption of some projects of its own choosing and the inclusion of local costs in the credit agreement. In December, 1965 Vice President Kawawa of Tanzania visited Moscow and the question of Soviet aid to Tanzania was reviewed. The Soviet Union apparently agreed to resume talks /but emphasized that

.../2

but emphasized that the same terms would apply as outlined in earlier talks with Tanzanian government officials. No further steps have been taken by the Soviet Union but the Tanzanian government is now reported to be considering asking the Soviet Union to resume discussions.

5. The aid extended by the East European communist countries has been obligated for a wide variety of projects including the establishment of a sugar estate and a sugar refinery by Poland, a shoe factory and a ceramics industry by Czechoslovakia and a housing development in Zanzibar by East Germany. We have no confirmed information concerning the progress being made on these projects, but believe that the housing development by East Germany is well underway.

6. At present the Chinese appear to be more active and influential in Tanzania, particularly in the Zanzibar Region, than the Soviets, and towards the end of 1965 it was estimated that about 100 Chinese technicians were located in Zanzibar compared with about 20 Soviet technicians and 50 from East European communist countries. However, Tanzania's earlier expectations of communist economic aid have not materialized and there now appears to be considerable disillusionment with the Soviet and Chinese programmes. In the case of the Soviet Union, Tanzanian government officials have been frustrated by the Soviet Union's refusal to accede to the loan terms requested by Tanzania. Enthusiasm for Communist China's interest-free "unselfish" aid is also waning now that the government is aware of what China has to offer through its aid programme. In addition, there is growing concern in Tanzania about the large number of Chinese workers now in the country, with the possibility of more to come, and the genuine fear that many of them may engage in subversive activities.

Military Aid

7. Zanzibar received arms deliveries from the Soviet Union and Communist China immediately following the revolution in 1964.* Arms aid has since been extended to the United Republic and frequent shipments of arms from Communist China and the Soviet Union were noted in 1964 and 1965. The respective military aid activities of the Soviet Union and Communist China in Tanzania are kept separate and there is a distinct element of competition involved in the supply of military equipment.

8. Deliveries by both countries are made by ship and are unloaded at Dar-es-Salaam and Zanzibar. On at least one occasion a Chinese ship delivering arms to Tanzania, also unloaded 75 tons of military equipment for Uganda. In addition to supplying arms to the armed forces of Tanzania, China and the Soviet Union are reportedly training and providing arms to various African dissident organizations in Tanzania, but we are unable to assess the scale of these activities.

.../3

* See Table I for estimate of arms delivered.

9. Most of the military equipment has been provided without cost to Tanzania although some items will probably be paid for out of budgeted expenditure. The value of Chinese military aid, included in an aid agreement with Tanzania in June, 1964 is estimated at about $4 million and the value of Soviet aid the same. Deliveries by both the Soviet Union and Communist China have included small arms, artillery, armoured personnel carriers, transport vehicles, small naval vessels and substantial quantities of small arms, mortar and artillery ammunition. A COLT(AN-2) light aircraft has been supplied.

10. The latest estimate we have concerning numbers of Chinese and Soviet military advisers in Tanzania include a total of 46 Chinese with about 20 of them at Camp Kigoma (for the Congo rebels), 11 at a military training school on the mainland and 15 at Mtoni Barracks, Zanzibar. About 28 Soviet military advisers are reported in the Republic of Tanzania, all of whom are stationed in Zanzibar. According to a recent statement by Vice President Kawawa 5 additional Chinese military advisers are scheduled to arrive in Tanzania.
(SECRET/CANUKUS)

PART I - ECONOMIC AID

GENERAL

Major Trends and Developments in Communist Economic Aid Programmes in the First Quarter of 1966

11. The communist economic aid programme for 1966 was ushered in by the extension of a $290 million (US) loan to Iran by the Soviet Union. The loan, which is repayable over 12 years with interest at 2.5 percent, has been obligated for the construction of a steel plant, a machine tool factory and for assistance in laying a natural gas pipeline from Iranian oil fields to the Soviet Union. Other communist aid extensions in the period included a $52 million Hungarian loan to India for its next development plan and credits to Pakistan from Czechoslovakia and the Soviet Union valued at $70 million and $20 million respectively for a total of $432 million in new aid extensions in the first quarter of 1966. Communist China did not extend new aid in the period.

12. A major setback was suffered by both the Russians and the Chinese as a result of the coup in Ghana when an estimated 500 Soviet and 20 Chinese technicians and Embassy personnel were asked to leave. While a recent report suggests that some of the Russians may remain, a number of Soviet and Chinese aid projects are likely to be affected.
(SECRET)

.../4

ASIA

India

13. Following the conclusion of a new trade agreement between India and Hungary it was announced that Hungary had offered India a $52 million credit for its next development plan. Previously Hungary had granted a $16 million loan to India in 1961 for an aluminum works and other projects. Recent talks have been held concerning a new and larger alumina plant and some of the new credit is likely to be used for this project. (UNCLASSIFIED)

Malaya and Singapore

14. According to recently published statistics, communist countries took 253,530 tons or nearly one-quarter of total Singapore and Malayan rubber exports in 1965. The Soviet Union was Malaya's biggest customer with 195,470 tons, appreciably more than the United Kingdom import figure (110,233 tons) and that of the United States (123,195 tons). The East European countries and China took 44,585 tons and 13,475 tons respectively. Chinese imports, which virtually ceased in 1964 (only 114 tons were purchased), were not resumed till November 1965 but the year's total was the highest since 1960. (RESTRICTED)

15. The 85 percent increase in Soviet imports of Malayan rubber in 1965 restored them roughly to the levels of 1962 and 1963. It is likely that the large rubber imports of 1961 and 1962 caused an accumulation of stocks which could be drawn down in 1964 when imports were much reduced, affording some relief no doubt in the foreign exchange situation brought about by the unusually large grain purchases of 1963-64. The additional re-exports to the Soviet Union of Malayan rubber purchases on the London market have meanwhile declined from 104,000 tons in 1961 to a negligible amount (112 tons) in 1965. In 1964 (the last year for which Soviet figures are available) direct imports from Malaya and Singapore accounted for about 58 percent of total Soviet imports of natural rubber, the other major suppliers being Indonesia and Ceylon. (RESTRICTED)

Pakistan

16. Recently Czechoslovakia offered Pakistan a $70 million (US) economic development credit, the largest-single communist credit extended to Pakistan. According to press reports a Pakistani delegation will visit Prague in April to formally accept the Czech credit offer which reportedly will be used in the construction of power plants and other industrial projects. More Soviet economic aid for Pakistan's third five-year plan is also expected in the near future. At the end of 1965 Pakistan had received a total of $184 million in economic aid from the communist countries, including $74 million from the Soviet Union, $90 million from Communist China and $20 million from the East European communist countries excluding the recent Czech aid offer. (SECRET)

.../5

17. Despite the increased communist effort to provide substantial aid to Pakistan during the past two years its aid programme is small when compared with the $4.3 billion (US) extended by Western countries since 1948. (SECRET)

18. As a result of increased trade between Pakistan and the communist countries trade authorities from both sides are now considering the establishment of a special trading organization to regulate trade exchanges. This organization would provide the centralized bargaining machinery to be used by the public and private sectors. Another result of the increased trade with the Soviet Union is an agreement to open an overland trade route through Afghanistan to the Soviet Union, in the hope of reducing transport costs. (UNCLASSIFIED)

MIDDLE EAST

Cyprus

19. Cyprus and Bulgaria will exchange goods to the value of almost $2 million on each side this year under a trade agreement between the two countries, which was recently renewed. (UNCLASSIFIED)

20. The principal goods to be exported to Bulgaria are citrus, wines, carobs, raisins, tobacco, almonds, fruit juices, olive oil and minerals. (UNCLASSIFIED)

21. Bulgarian imports will include machinery, timber products, textiles, carpets, glass and glassware, meat, china-ware and porcelainware. (UNCLASSIFIED)

Kuwait

22. During a recent visit to Kuwait by the Premier of Hungary agreement was reached by the two countries on the expansion of economic and financial relations and cooperation in technical and scientific fields. (SECRET)

23. During the past two years Kuwait has discussed closer economic relations with Poland, Communist China and the Soviet Union, but, so far, the results have been negligible. (UNCLASSIFIED)

Jordan

24. According to recent reports the USSR is making a strong effort to obtain a concession for oil exploration in Jordan. A US company currently holds concessionary rights in Jordan but has not been successful in finding oil and may discontinue exploration activities. (SECRET)

.../6

Syria

25. Czechoslovakia is reported to have concluded an agreement with Syria under which Czechoslovakia has agreed to construct a petroleum refinery in north-eastern Syria near oil deposits that have been discovered there. According to a report the refinery will have an annual capacity of 1.2 million tons. Under a previous aid agreement with Syria, Czechoslovakia constructed a petroleum refinery at Homs in 1957 at a cost of $9.5 million. (RESTRICTED)

26. Bulgaria has offered to finance some development projects in Syria including one to exploit Syrian phosphate deposits. Previous Bulgarian economic aid to Syria was valued at $22 million and was used to help finance various Syrian irrigation projects. (UNCLASSIFIED)

Turkey

27. A Czech foreign trade delegation visited Turkey recently and held preliminary talks with Turkish government officials on the possibilities for a long-term economic agreement. In recent years Turkey has received several light industrial plants from Czechoslovakia that were financed by commercial credits. However, the new economic agreement discussed would likely involve a standard-type Czech credit. (UNCLASSIFIED)

UAR

28. During a recent visit to the UAR by the Premier of Hungary several agreements were concluded, the most important of which concerned air transport, the establishment of a joint economic relations committee and the extension of a $42 million credit to the UAR. This loan was negotiated in November, 1965.

29. Hungary is currently delivering equipment, including railway rolling stock and river boats under a previous loan valued at $35 million. Details concerning the utilization of the new credit are not yet known, but it is believed that a pharmaceutical plant may be one of the projects undertaken. (UNCLASSIFIED)

Yemen

30. Under an agreement concluded with Yemen in January, 1966 East Germany will construct a long-distance telephone communications system joining a number of cities and towns in Yemen. The cost of the project is estimated at about $2 million and will be financed under a previous East German credit of $2 million repayable over a 10-15 year period. (CONFIDENTIAL)

.../7

AFRICA

Ghana

31. Although the full impact of the recent coup on Ghana's relations with the communist countries has not yet been fully determined it is clear from the evidence so far that such relations are to be drastically reduced. Since the coup on 24 February Ghana's quasi-diplomatic relations with East Germany have ceased and relations with Communist China confined to a substantially reduced diplomatic representation and perhaps a limited volume of trade. A large number of Soviet technicians have also been expelled from Ghana although recent press announcements indicate that some Soviet personnel may be asked to return including about 100 school teachers. (CONFIDENTIAL)

32. The new Ghanaian government has announced that it intends to honour all international commitments, including bilateral trade pacts but some of the latter arrangements may be reviewed. However, the recently announced cocoa deal with the Soviet Union has been confirmed by the Ghanaian government. In addition, it is believed that the new regime will wish to continue the moratorium on debt repayments to the communist countries which the N'krumah government negotiated in 1965. (CONFIDENTIAL)

33. Ghana has received a total of $232 million in economic aid from the communist countries, including $90 million from the Soviet Union, $42 million from Communist China and about $100 million from the East European communist countries. Up to the present time about $40 million of the aid extended has been drawn. (SECRET)

34. It is now reported that $2.2 million (US) worth of Ghana's favourable clearing balance with the Soviet Union (see JIB(CAN) 4/66 dated 22 January 1966) was disposed of to a Swiss bank at 9 percent discount. On the other hand Czechoslovakia and Bulgaria have favourable clearing balances with Ghana and the Czechs are reported to have attempted to dispose of their balance, but were unsuccessful. (SECRET)

Kenya

35. Recently the Kenyan government requested the Soviet Union to cancel and suspend a number of projects scheduled to be implemented under a Soviet loan extended to Kenya in 1964. Only two gift projects will be undertaken including a hospital at Kisumu and two secondary technical schools. The local costs of these projects are being covered by the sale of Soviet sugar in Kenya. Projects cancelled included the Kano Plains irrigation scheme, a sugar refinery and a land clearing project. Four projects were suspended including a fruit cannery, a textile mill, a fish cannery and a radio station. (UNCLASSIFIED)

.../8

36. According to a Kenyan government statement its main problems concerning the utilization of Soviet economic aid have been the Soviet Union's unwillingness to cover the local costs of projects and the difficulty Kenya has experienced in raising the funds through the sale of Soviet goods in Kenya. (UNCLASSIFIED)

Liberia

37. According to a US report Poland has offered to build a complete cement grinding mill in Liberia and to supply technical aid for assembly and operation of the plant for a period of five years. At the end of the five-year period Liberians would take over operation of the mill. (RESTRICTED)

LATIN AMERICA

Argentina

38. According to a UK report the Soviet Union has offered to help finance a hydro-electric complex which Argentina is to construct at a cost of $400 million. The value of the Soviet aid contribution for the project was not disclosed but the offer may have some connection with a $100 million credit offer made by the Soviet Union to Argentina in 1965. (CONFIDENTIAL)

Uruguay

39. In late January there were reports that the Soviet Union had offered Uruguay a $30 million credit repayable in five years with interest at 3.5 percent. Uruguay could use the loan to buy crude oil, agricultural machinery and other products from the Soviet Union. In return the Soviet Union would buy rice, wool, shoes and textiles from Uruguay. (SECRET)

TABLE I

TANZANIA - ESTIMATED COMMUNIST ARMS DELIVERIES

Type of Equipment	Total Arms Delivered
NAVAL	
Small Patrol Boats	6
GROUND	
Armour	
BTR-152 armoured personnel carriers	15+
BTR-40 armoured personnel carriers	30
ARTY Fd	
76 mm Fd GUN	6+
57 mm Fd GUN	4+
ARTY Anti-Aircraft	
37 mm AA GUN	24+
MORTARS	
120 mm	12+
TRANSPORT VEHICLES	
Various	400
AIR	
COLT (AN-12)	1

TABLE II

Communist Economic Aid Extensions

1 January - 31 March 1966

By	To	(Million US$) Project Aid	Other Loans	Total
Soviet Union	Iran	290.0		290.0
	Pakistan	20.0		20.0
	Turkey*	33.0		33.0
		343.0		343.0
Czechoslovakia	Pakistan	70.0		70.0
		70.0		70.0
Hungary	India	52.5		52.5
		52.5		52.5
TOTAL		465.5		465.5

* The value of the Soviet loan to Turkey in 1965 has been revised upward to $200 million, an increase of $33 million.