50048- AF-40 Pt.1

Document disclosed under the *Access to Information Act*
Document divulgué en vertu de la *Loi sur l'accès à l'information*

Document disclosed under the *Access to Information Act*
Document divulgué en vertu de la *Loi sur l'accès à l'information*

[redacted]

SECRET

RED REGISTRY

D

Department of External Affairs

Subject: SECURITY ARRANGEMENTS AT THE CANADIAN PERMENENT DELEGATION TO THE UNITED NATIONS

File No. 50048-AF-40

Volume ONE

From JANUARY 26, 1948

To ~~[redacted] Feb 8, 1963~~ DEC. 31 1961

GENERAL FILE

Date	Referred To	Returned	Date	Referred To	Returned

Closed

XP

PUBLIC ARCHIVES
REFERENCE LIBRARY
BIBLIOTHÈQUE DE RÉFÉRENCE

DECLASSIFIED

ACCESS TO INFORMATION
L'ACCES A L'INFORMATION
EXAMINED BY / EXAMINÉ PAR:
DATE / DATE: 26/12/88

Document disclosed under the *Access to Information Act*
Document divulgué en vertu de la *Loi sur l'accès à l'information*

FOR SUBSEQUENT CORRESPONDENCE SEE NEXT PART OF FILE

Document disclosed under the *Access to Information Act*
Document divulgué en vertu de la *Loi sur l'accès à l'information*

DEPARTMENT OF EXTERNAL AFFAIRS, CANADA

OUTGOING MESSAGE

DATE	FILE		SECURITY
DECEMBER 11 1961	50048-AF-40		SECRET
	55	50	

FM: EXTERNAL OTTAWA

NUMBER	PRECEDENCE	COMCENTRE USE ONLY	
DS356	PRIORITY		

TO: PERMIS N.Y.

INFO:

Ref.: YOUR TEL 3176 DECEMBER 7 1961

Subject: SECURITY CONTAINER

SHELLS ALL SET ON THIRTY ONE - SIXTY - FIFTY FIVE

CAL
STRIBUTION

ORIGINATOR	DIVISION	PHONE	APPROVED BY
E.KEYES/MLH	D.L. (2)	2-2817	SIG. J. TIMMERMAN NAME J. Timmerman

(12/56)

Document disclosed under the *Access to Information Act*
Document divulgué en vertu de la *Loi sur l'accès à l'information*

OMST062

EN103

PP OTT

DE NYK

P 072201Z

FM PERMISNY DEC7/61 UNCLAS

TO EXTERNAL 3176 PRIORITY

SECURITY CONTAINERS

WE HAVE NOW RECEIVED SIX SECURITY CONTAINERS WITH SHELLS.WE ARE UNABLE TO OPEN THEM ON USUAL FACTORY COMBINATIONS.PLEASE CONTACT SUPPLIER AND INFORM US OF COMBINATION SETTINGS AS SOON AS POSSIBLE.

072205Z

GR40

Mr Keyes:

7/12

NNNN

Document disclosed under the *Access to Information Act*
Document divulgué en vertu de la *Loi sur l'accès à l'information*

DEPARTMENT OF EXTERNAL AFFAIRS, CANADA. *(FILE COPY)*

NUMBERED LETTER

TO: The Permanent Mission of Canada to the United Nations, New York.

FROM: THE UNDER-SECRETARY OF STATE FOR EXTERNAL AFFAIRS, OTTAWA, CANADA.

Reference:

Subject: Department of External Affairs Manual of Security Instructions

Security: SECRET

No: DS-475

Date: October 10, 1961.

Enclosures: 1

Air or Surface Mail: Air

Post File No:

Ottawa File No. 50048-AF-40

55 | 57

References

Internal Circulation

Distribution to Posts

With this letter you are being sent Copy No. 99 of the new Department of External Affairs Manual of Security Instructions.

2. This manual establishes the basic principles and minimum security standards to be applied by all members of the service at home and abroad for the protection of classified information. It aims to provide common standards of protection throughout the service, and to ensure maximum security with minimum inconvenience.

3. This manual does not contain an answer for every security problem which may arise. Because of the great variety of conditions encountered in the many countries in which our Foreign Service is serving, it has not been possible to include rules and instructions applicable to all conceivable circumstances. These security instructions, therefore, have been expressed for the most part in general terms, and their application to specific cases abroad has been left to the good judgement of individual Heads of Posts.

4. Under the direction of the Head of Post the Security Officer at your post will find it necessary to prepare local security standing orders to supplement the security instructions and to apply them to your particular circumstances.

5. Good security practices are based on a high standard of personal behaviour and sound administration. For this reason this manual, which will be used as both a reference document and a training manual, places much emphasis on a number of administrative routines which must be followed if basic security principles and practices are to be observed and enforced properly as a matter of course.

6. I trust you will find the manual instructive and useful. Any comments you may make concerning it or amendments you may care to suggest will be most welcome.

Under-Secretary of State
for External Affairs

Ext. 181A (Rev. 2/52)

Document disclosed under the *Access to Information Act*
Document divulgué en vertu de la *Loi sur l'accès à l'information*

11625-A

ACTION CO

To:
SEP 28 1961
To:

50048 AF-4
55 50

FM PERMISNY SEP27/61 RESTD

TO EXTERNAL 1994

SARGENT AND GREENLEAF PADLOCKS

WE HAVE NOW RECEIVED OUR SHIPMENT OF FOUR NEW FILING CABINETS WITH BAR AND HASP BUT UNFORTUNATELY ONLY HAVE TWO SARGENT AND GREENLEAF PADLOCKS AVAILABLE FOR USE ON THEM.WE HAVE ENQUIRED FROM SILVER HARDWARE NY AND CAN OBTAIN THESE LOCKS AT DOLLARS 7.87 EACH.WE SHOULD BE GRATEFUL TO RECEIVE YOUR AUTHORITY FOR LOCAL PURCHASE OF SIX OF THESE PADLOCKS.THESE WOULD PROVIDE US WITH FOUR EXTRA PADLOCKS FOR USE AS SPARES.....

EA 11625-A

SUPPLIES AND PROPERTIES
FOR FILE
ACTION TAKEN
TELEGRAM
LETTER
ORDERD
BY:
DATE Oct 2/61

agreed - G. Rigg
Sept 29/61

OK
2/10/61

SEP

Document disclosed under the Access to Information Act
Document divulgué en vertu de la Loi sur l'accès à l'information

D.C. Arnould/tc

File AFD

New York, September 18, 1961.

RESTRICTED

MEMORANDUM FOR ALL MEMBERS OF THE DELEGATION

SUBJECT: SECURITY

50048-AF-Fa
101

During the course of the General Assembly a great many classified papers and documents are distributed containing confidential material on all questions before the General Assembly. This material may contain the underlying factors bearing upon Canadian policies, or, perhaps critical references to opinions and proposals of our close friends, as well as other members of the Assembly. If this material receives any currency at all outside the Delegation, either by a paper being left about or by reference to the contents on the telephone or in a public place, it could have serious effects on what Canada is seeking to do at the current session of the Assembly.

2. In order to safeguard this sensitive material, the first rule is: Keep as much material as you can on the Delegation premises. Material which must be taken to meetings or which members of the Delegation wish to study in their rooms must never leave the hand of the person responsible for it.

3. The following are a number of points which should be borne in mind at all times on the question of security:

(a) The members of other delegations and the press are always interested in getting confidential information. The lounges and corridors will be full of people attempting to seek views and information on sensitive questions. The Soviet Bloc has a number of officials constantly in the lounges and in the corridors for the express pur-

...2

Document disclosed under the *Access to Information Act*
Document divulgué en vertu de la *Loi sur l'accès à l'information*

pose of picking up information, either by overhearing or by acquiring papers which have been left behind.

(b) All telephones are unsafe, especially those at the United Nations. Do not repeat any information which is sensitive over the telephones since it is taken for granted that conversations can ~~are monitored.~~ be overheard.

(c) Classified material should never be left unprotected in hotel rooms, nor should brief cases be checked at the U.N. or in any other place except the Delegation office. After the Delegation left last year, a great deal of classified ~~information~~ material was ~~discovered~~ found in hotel rooms.

(d) No one but members of the Delegation should be allowed free access to the Delegation offices. If someone is calling on you, it is your responsibility to meet ~~him~~ a visitor at the door after the receptionist has notified you of ~~a visitor's~~ his arrival, and escort him to your room. The visitor should then be escorted back to the main door of ~~at~~ the Mission after the meeting has been concluded.

(e) Visitors should not be allowed to remain in offices alone. There is invariably classified material ~~on desks~~ left on desks and which can easily be read.

(f) Classified material should not be put in the waste baskets. The waste baskets are checked by the security staff; however, the building cleaning staff has access to the offices, although under surveillance, and papers left in the basket may be picked up by them. Classified waste should be so marked and sent to the Registry for proper disposal.

Document disclosed under the *Access to Information Act*
Document divulgué en vertu de la *Loi sur l'accès à l'information*

(g) Pigeon holes in mail rooms should be cleared every night and classified material placed in security containers.

(h) The fire doors on the 28th floor should not be used and should be locked at all times from the outside.

4. If you are aware that a breach of security has ~~been made~~ occurred, or if you have lost some classified material, this should be reported immediately to me.

W. H. Barton.

Document disclosed under the Access to Information Act
Document divulgué en vertu de la Loi sur l'accès à l'information

D.I.(R)/R.J.Andrews/df

DEPARTMENT OF EXTERNAL AFFAIRS, CANADA. **(FILE COPY)**

NUMBERED LETTER

TO: The Permanent Mission of Canada to the United Nations, New York

FROM: THE UNDER-SECRETARY OF STATE FOR EXTERNAL AFFAIRS, OTTAWA, CANADA.

Reference: Your letter 502 of Aug. 24, 1961

Subject: Security Arrangements

Security: CONFIDENTIAL

No: DS-407

Date: September 12, 1961

Enclosures:

Air or Surface Mail:

Post File No:

Ottawa File No.	
50048-AF-40	
55	50

References

Due to other commitments we are unable at the present time to undertake the task you suggested. However, following the completion of alterations in your new area the matter will be reconsidered and you will be further advised.

J. TIMMERMAN

Under-Secretary of State
for External Affairs.

Internal Circulation

Communications Division

Distribution to Posts

Ext. 181B (Rev. 2/52)

Document disclosed under the Access to Information Act
Document divulgué en vertu de la Loi sur l'accès à l'information

Ottawa, September 12,1961.

FROM: THE DEPARTMENT OF EXTERNAL AFFAIRS, CANADA

TO: Permanent Mission of Canada to the United Nations,
NEW YORK.

66 Sept 12

We are forwarding by (Surface) the following:

500-18-AF-10	
14	—

500 Security Guard Log sheets

Please refer to your letter No.589 of August 17/61.

file

When the above has been received and checked, would you kindly sign and return the original form Ext. 27 R.

Under-Secretary of State
for External Affairs

Return to rm.319,D.L.(2) E.B.

This is to certify that the above mentioned items have been received in good order.

Place Date Signature

Ext. 27 R (Rev. 2/53)

Document disclosed under the *Access to Information Act*
Document divulgué en vertu de la *Loi sur l'accès à l'informatio*

DEPARTMENT OF EXTERNAL AFFAIRS, CANADA.

NUMBERED LETTER

TO: THE UNDER-SECRETARY OF STATE FOR EXTERNAL AFFAIRS, OTTAWA, CANADA.

FROM: THE PERMANENT MISSION OF CANADA TO THE UNITED NATIONS

Reference: Our letter No. 613 of August 28, 1961.

Subject: COMBINATIONS OF SECURITY CONTAINERS

Security: SECRET

No: 639

Date: September 7, 1961.

Enclosures: 1

Air or Surface Mail: AIR

Post File No:

Ottawa File No.
50048-AF-40
14 | 50

References

D-2
1
2
3
4
5
6
7
13
SEP 12 1961

Internal Circulation

D

Distribution to Posts

9:14

File
Defer on DL 2 with
enclosure

Attached is a sealed envelope containing the combinations of the security containers in the Communications section of this Mission, which were changed today.

Permanent Mission

Document disclosed under the Access to Information Act
Document divulgué en vertu de la Loi sur l'accès à l'information

Supplies and Properties Division/J. A. Zoubie/EB

DEPARTMENT OF EXTERNAL AFFAIRS

MEMORANDUM

Mr Keyes to see
file
9/19

TO: Defence Liaison (ii) Division.

Attn: Mr. Timmerman.

FROM: Supplies and Properties Division

REFERENCE: Telephone conversation Mr. Timmerman/Mr. Zoubie

Security CONFIDENTIAL

Date September 1, 1961.

File No. 50048-AF-40 ~~9722-P-1-40~~

55

SUBJECT: CDUN Office Premises.

As requested please find attached a copy of the plan of the floor of the building in which the CDUN offices are located. We have outlined in red the office accommodation first taken. The cross-hatched area is the new area which we have just taken over and it represents the remaining available space on that floor.

2. As mentioned to you in the telephone conversation the present plan is to make no change in the partitioning on this floor. The Mission has suggested that they will operate with the new area in its present condition. We believe that they will be requesting at least two new locks, one for the doorway marked D-1 and one marked for the doorway D-2.

3. At a later date (probably sometime following the forthcoming Session of the General Assembly) we will be discussing with you proposals for repartitioning and reallocation of space on this floor.

4. You may keep this copy of the plan if you wish.

J. A. Zoubie

Supplies and Properties Division.

CIRCULATION

26A (6/56)

Document disclosed under the *Access to Information Act*
Document divulgué en vertu de la *Loi sur l'accès à l'information*

DEPARTMENT OF EXTERNAL AFFAIRS, CANADA.

NUMBERED LETTER

TO: THE UNDER-SECRETARY OF STATE FOR EXTERNAL AFFAIRS, OTTAWA, CANADA.

FROM: THE PERMANENT MISSION OF CANADA TO THE UNITED NATIONS

Reference: Our letter No. 422 of June 14

Subject: COMBINATIONS OF SECURITY CONTAINERS

Security: SECRET

No: 613

Date: August 28, 1961.

Enclosures: 1

Air or Surface Mail: AIR

Post File No:

Ottawa File No.	
50048-AF-10	
14	58

References

D-2

1
2
3
4
5
6
7
8
9
10
11

AUG 29 1961

Duplicate + enclosure removed. DL.2

File

30/8/61

Attached is a sealed envelope containing the combinations of the security containers in this Mission, with the exception of those in the Communications Section, which are forwarded separately.

W H Barton
Permanent Mission

Internal Circulation

D

Distribution ts

Rev. 2/52)

Document disclosed under the Access to Information Act
Document divulgué en vertu de la Loi sur l'accès à l'information

DEPARTMENT OF EXTERNAL AFFAIRS, CANADA.

NUMBERED LETTER

UNCLASSIFIED

Security:

No: 589

Date: August 17, 1961

Enclosures: 1

Air or Surface Mail: Air

Post File No: 13-1-2

Ottawa File No.	
50048-AF-40	
14	50

TO: THE UNDER-SECRETARY OF STATE FOR EXTERNAL AFFAIRS, OTTAWA, CANADA.

FROM: PERMANENT MISSION OF CANADA TO THE UNITED NATIONS, NEW YORK.

Reference:

Subject: Security Guard Log

Attn: Mr. F.K.E. Keyes

References

D-2

1
2
3
4

14 AUG 21 1961

It should be appreciated if 500 sheets of the enclosed "Security Guard Log" could be provided at your earliest convenience.

Sent 12/9/61

File

Permanent Mission.

Internal Circulation

D

Distribution to Posts

Ext. 182A (Rev. 2/52)

Document disclosed under the *Access to Information Act*
Document divulgué en vertu de la *Loi sur l'accès à l'information*

Mrs Keyes, 500. Sheets,

DEPARTMENT OF EXTERNAL AFFAIRS

SECURITY GUARD LOG

PERIOD: From 0600 Hrs To 0600 Hrs 195

SPECIAL TASKS AND/OR INSTRUCTIONS

DUTY ROSTER

NAME	TIME ON	TIME OFF	SIGNATURE

OCCURRENCES AND DUTIES

TIME	DETAILS

Document disclosed under the *Access to Information Act*
Document divulgué en vertu de la *Loi sur l'accès à l'information*

Continued from Page 1

OCCURRENCES AND DUTIES

TIME	DETAILS

Document disclosed under the Access to Information Act
Document divulgué en vertu de la Loi sur l'accès à l'information

Supplies & Properties Div/G.E.Wright/sg

DEPARTMENT OF EXTERNAL AFFAIRS, CANADA

(DUPLICATE)

File

NUMBERED LETTER

To: The Permanent Mission to the United Nations, New York.

From: THE UNDER-SECRETARY OF STATE FOR EXTERNAL AFFAIRS, OTTAWA, CANADA.

Reference: Your Letter 469 of June 27,1961.

Subject: Security Shells and Inserts and Bar and Hasp Cabinets

Security: Restricted

No.: F-

Date: July 11,1961

Enclosures:

Air or Surface Mail: Air

Post File No.:

Ottawa File No. 50048-AF-40 ~~9722-C-1-40~~

55

References

Arrangements have been made to supply six security shells and inserts and four filing cabinets with bars and hasps.

2. The bar and hasp cabinets should be in New York by August 30 at the latest. However, we cannot be sure of delivery of the security containers and inserts before September 30 at the earliest because of production time and shipping arrangements.

ORIGINAL SIGNED BY
H. A. HUNTER

Under-Secretary of State
for External Affairs

July 12. 1961

D.L.II
Your memo of July 7/61 (50048-AF-10)
refer
G.

Internal Circulation

D.L. II ✓

Distribution to Posts

Ext. 181C (Rev. 2/52)

Document disclosed under the *Access to Information Act*
Document divulgué en vertu de la *Loi sur l'accès à l'information*

DEPARTMENT OF EXTERNAL AFFAIRS, CANADA.

NUMBERED LETTER

TO: THE UNDER-SECRETARY OF STATE FOR EXTERNAL AFFAIRS, OTTAWA, CANADA.

FROM: Permanent Mission of Canada to the United Nations, New York

Reference: Your Letter DS-196 of April 27

Subject: Security Arrangements

Security: Secret

No: 502

Date: July 8, 1961

Enclosures:

Air or Surface Mail:

Post File No:

Ottawa File No.	
50048-AF-40	
14	50

References

D-2

JUL 11, 1961

Internal Circulation

D

Distribution to Posts

We are grateful for the helpful observations and recommendations contained in your letter under reference and in the attached report prepared by Mr. Andrews on the basis of his visit to this Mission in February. We very much regret that previous suggestions have not been implemented as quickly as they should have been. It is true that the pressure of other duties has made it difficult for the Security Officer, who is at the same time Head of Chancery, to undertake the thorough review of security arrangements that was required. This review is now in hand, however, and we shall report in due course on the implementation of the detailed recommendations contained in your letter under reference. Responsibility for this will rest with the Administrative Officer of the Mission, who is acting as Assistant Security Officer.

2. At the same time it should be pointed out that our security arrangements will require further review after the Mission has taken over additional office space. As you know, it is planned to acquire the remainder of the floor on which the Mission is situated. It is expected that the present tenants will vacate some time during the summer but it is unlikely that we will be able to move in much before the next session of the General Assembly begins in September, and any structural changes will have to be made after the session is over. It may therefore be advisable to defer implementation of the more important measures you have recommended until after the turn of the year, when the layout of the whole floor can be considered as a unit and when such new partitioning as may be necessary can be planned with due regard to the security aspects.

Mr Timmerman 14/7

J. H. Halstead
Permanent Mission

Ext. 182A (Rev. 2/52)

Document disclosed under the *Access to Information Act*
Document divulgué en vertu de la *Loi sur l'accès à l'information*

1961 JUL 11 AM 11:07

NO ENCLOSURES

Document disclosed under the Access to Information Act
Document divulgué en vertu de la Loi sur l'accès à l'information

D.L.(2)/R.C.Andrews

DEPARTMENT OF EXTERNAL AFFAIRS

MEMORANDUM

TO: Supplies and Properties Division

FROM: D.L.(2) Division

REFERENCE: Permis, New York letter 469 of June 27,1961

Security: RESTRICTED

Date: July 7, 1961

File No. 50048-AF-2

68	✓	✓

SUBJECT: Combination Security Containers and File Cabinets

6 @ $737.00 each

We are attaching a copy of the letter under reference in which the Mission requests six security shells with inserts and four bar and hasp file cabinets. We would concur with the request of the Mission. You will note that delivery is requested for September 15, 1961.

Order placed

6-shells 10853

6-inserts 10854

6-cases 10855

4-Bar & Hasp cabinets 10856

Defence Liaison (2) Division

CIRCULATION

SUPPLIES AND PROPERTIES
FOR FILE ✓
ACTION TAKEN
TELEGRAM
LETTER
ORDERD
BY:
DATE July 11/61

Ext. 326 (6/56)

Document disclosed under the Access to Information Act
Document divulgué en vertu de la Loi sur l'accès à l'information

DEPARTMENT OF EXTERNAL AFFAIRS, CANADA.

NUMBERED LETTER

Security: SECRET CANADIAN EYES ONLY

No: 488

Date: July 5, 1961.

Enclosures:

Air or Surface Mail: AIR

Post File No:

Ottawa File No. 50048-AF-40

55 | 50

TO: THE UNDER-SECRETARY OF STATE FOR EXTERNAL AFFAIRS, OTTAWA, CANADA.

FROM: THE PERMANENT MISSION OF CANADA TO THE UNITED NATIONS

Reference: Your letter DS-114 of February 12/59

Subject: CLANDESTINE LISTENING DEVICES

References

Mr Timmerman
Encl

JOHN STARNES

Your letter under reference and its attachments, which have been seen by authorized Canadian personnel on a strict "need to know" basis only, have now been destroyed as classified waste.

NO JUL 1961

J.H. Halstead
Permanent Mission

Internal Circulation

Mr Andrews:

Isn't this a bit late?

Have all posts now reported?

12/7

D

Distribution to Posts

This document was noticed during the security inspection of the Mission and brought to their attention

6/7

Ext. 182A (Rev. 2/52)

Document disclosed under the *Access to Information Act*
Document divulgué en vertu de la *Loi sur l'accès à l'information*

1981 JUL 7 AM 8:51

NO ENCLOSURES

Permanent Mission

your letter under reference and its attachments which have been seen by authorized Canadian personnel or a strict "need to know" basis only have been classified Secret.

THE PERMANENT MISSION OF CANADA
TO THE UNITED NATIONS

July 2, 1981

Your letter of 81-11-6 of September 15/80

CONFIDENTIAL LISTENING DEVICES

TOP SECRET
CANADIAN EYES ONLY

Document disclosed under the Access to Information Act
Document divulgué en vertu de la Loi sur l'accès à l'information

D.L.(2) R.J. Andrews/cf

DEPARTMENT OF EXTERNAL AFFAIRS

MEMORANDUM

TO: Supplies and Properties Division

FROM: D.L.(2) Division

REFERENCE:

SUBJECT: Destruction of Classified Waste -- PERMIS, New York

Security: RESTRICTED

Date: June 28, 1961

File No. 3607-40
50048-AF-40

55

At the present time the Permanent Mission to the United Nations in New York has no facilities for the destruction of classified waste. This has made necessary the packaging of all the Mission's classified waste and its transportation to our Embassy in Washington D.C. for destruction. This has placed an almost intolerable burden on Washington's inadequate facilities.

2. During a recent visit to Ottawa Mr. Holmes, the Administrative Officer of the U.N. Mission, had the opportunity to examine and operate a Bandashred Industrial Shredder. At the same time the manner in which the Department would require the waste to be processed was described to him. Mr. Holmes felt that the shredder would be most adequate for the requirements of the Mission and they have now written requesting that an order be placed. We concur with their request.

3. The Mission also advises that 220 volt three phase current is available in the building and that the cost of bringing this power into

....2

CIRCULATION

Ext. 326 (6/56)

Document disclosed under the *Access to Information Act*
Document divulgué en vertu de la *Loi sur l'accès à l'information*

their area would be between $250 and $300 if the horsepower of the motor is "small" and between $500 and $600 if the horsepower is "large".

4. If you will advise us when this equipment is to be delivered to the U.N. Mission we will prepare instructions for them concerning the manner in which classified waste is to be processed.

J. TIMMERMAN

Defence Liaison (2) Division

Document disclosed under the *Access to Information Act*
Document divulgué en vertu de la *Loi sur l'accès à l'information*

DEPARTMENT OF EXTERNAL AFFAIRS, CANADA.

NUMBERED LETTER

TO: THE UNDER-SECRETARY OF STATE FOR EXTERNAL AFFAIRS, OTTAWA, CANADA.

FROM: PERMANENT MISSION OF CANADA TO THE UNITED NATIONS, NEW YORK

Reference:

Subject: COMBINATION SECURITY CONTAINERS AND FILE CABINETS.

Security: RESTRICTED

No: 469

Date: JUNE 27, 1961

Enclosures:

Air or Surface Mail: AIR

Post File No:

Ottawa File No.	
50048-AF-10	
14	50

References

D-2

1
2
3
4
5
6
7
8
9
10
11

JUN 30 1961

Internal Circulation

D

Distribution to Posts

We have been reviewing our requirements for combination security containers and file cabinets with a view to both our present needs and also our future needs when we acquire the Asch Co. space later this summer.

2 We think it desirable that each officer be provided with a combination security container for storage of material overnight. At present three of our officers are without such containers. Furthermore, it will be necessary to provide at least three additional containers for use in the new office space during the General Assembly period by Delegates and Observers. The equipment we have in our offices at present is of two types:

(a) Containers manufactured by John C. Preston Limited, 37 Murray St., Ottawa, with 4 drawer file cabinet inserts manufactured by H.H. Popham Company, Ottawa.

(b) Containers manufactured by J. & J. Taylor Limited, Toronto, with file cabinet inserts manufactured by Lakow Furniture, New York City.

We wish to recommend that an order be placed for six of these containers with cabinet inserts. We have no particular preference for either the Preston or Taylor units. It is hoped that delivery of these items can be assured for September 15.

3 We also require four file cabinets with bar and hasp for use in our Registry Section. Two of these cabinets are for use as replacements for exisiting ones whose drawer tracks are worn out. The other two cabinets are required to provide extra space for current files. The cabinets provided last year were manufactured by Office Specialty Company and were grey in colour. It would be appreciated if you would place an order for four similar cabinets to match those in our office.

Memo to Supplies & Prop. concurring 7/7/61

W. H. Holmes.
Permanent Mission

Ext. 182A (Rev. 2/52)

Document disclosed under the *Access to Information Act*
Document divulgué en vertu de la *Loi sur l'accès à l'information*

1961 JUN 29 PM 3:06

NO ENCLOSURES

Document disclosed under the Access to Information Act
Document divulgué en vertu de la Loi sur l'accès à l'information

DEPARTMENT OF EXTERNAL AFFAIRS, CANADA.

NUMBERED LETTER

Mr Smith

Security: SECRET

No: 422

Date: June 14, 1961.

Enclosures:

Air or Surface Mail: AIR

Post File No:

Ottawa File No. 50048-AF-40

33 | 57

TO: THE UNDER-SECRETARY OF STATE FOR EXTERNAL AFFAIRS, OTTAWA, CANADA.

FROM: THE PERMANENT MISSION OF CANADA TO THE UNITED NATIONS

Reference: Our letter No. 17 of January 11, 1961

Subject: COMBINATIONS OF SECURITY CONTAINERS

References

Internal Circulation

Distribution to Posts

D

D-11

1
2
3

11

JUN 19 1961

Attached is a sealed envelope containing the combinations of the security containers in the Communications section of this Mission, which were changed today.

J.H. Halstead
Permanent Mission

File

Ext. 182A (Rev. 2/52)

Document disclosed under the Access to Information Act
Document divulgué en vertu de la Loi sur l'accès à l'information

D.L.(2) Div./J. Timmerman/mc

DEPARTMENT OF EXTERNAL AFFAIRS, CANADA. *(FILE COPY)*

NUMBERED LETTER

TO: The Permanent Mission of Canada to the United Nations, NEW YORK.

FROM: THE UNDER-SECRETARY OF STATE FOR EXTERNAL AFFAIRS, OTTAWA, CANADA.

Reference:

Subject: Security Arrangements - PERMIS, New York.

Security: SECRET

No: DS-196

Date: April 27, 1961.

Enclosures: 1

Air or Surface Mail: Air

Post File No:

Ottawa File No. 50048-AF-40

14 | 50

References

Internal Circulation

Distribution to Posts

We attach for information and action or comment, a copy of a memorandum dated April 19, 1961 from Mr. R.J. Andrews of Defence Liaison (2) Division on his recent visit to your post.

2. Subject to the observations which follow, we agree with the recommendation set out in Mr. Andrews' report. We should be glad if you would take action to implement these recommendations without delay or let us have your comments on them as the case may be.

3. Our own observations follow:

(a) Maintenance of Security Guard Log
(Reference para. 6 of attached report)

We think that the log maintained by the security guards should be kept in the greatest detail and contain an account of everything that occurred during the guards' tour of duty. For example, details of any visitors or staff who came to the office after hours, telephone calls received, checks of the premises by the guard, security infractions discovered in the course of such checks and departures by the guard from the premises, should all be entered in the log in the greatest possible detail. In addition, the log should be examined and initialled each morning by the Post Security Officer or some other responsible person designated by the Post Security Officer. These requirements should be spelled out in the post's Standing Security Guard Orders.

(b) Entrance Door
(Reference para. 9 of attached report)

An equally acceptable alternative would be to equip the main entrance door with a strong and well mounted anti-intrusion chain

(c) The Sensitive Area
(Reference para. 10 of attached report)

Provided you adopt the recommendation set out in para. 17 of the report (i.e., that individual offices be equipped with a Yale 048 lock), the recommendation that the archway between the reception room and the hallway giving access to offices and the sensitive area of the chancery may be dispensed with.

/ ...2

Ext. 181B (Rev. 2/52)

Document disclosed under the *Access to Information Act*
Document divulgué en vertu de la *Loi sur l'accès à l'information*

(d) Key Box
(Reference para. 11 of attached report)

We support the recommendation that a key box be installed for use during those times when a two-guard schedule is in effect. However, if offices are equipped with security locks as recommended, they could be left locked when the chancery is unoccupied, thus increasing your security defence in depth.

(e) Communications Center and Registry
(Reference paras. 13 and 15 of attached report)

We agree with the recommendation that the Communications center and the Registry should be provided with peepholes to allow the guard to inspect these rooms without having to enter them, provided this may be done without too much inconvenience and at too great a cost. Inspection ports are expensive units and difficult to install.

(f) Registry
(Reference para. 16 of attached report)

We urge strongly that some system be devised of reducing the number of people who apparently have access to your Registry and the classified material it contains, particularly during the General Assembly. This might be done in any number of ways, e.g., by providing a distribution rack for unclassified correspondence outside the Registry and Communications area and ensuring that classified correspondence is delivered to individual offices at specified times.

J. TIMMERMAN

Under-Secretary of State
for External Affairs

Document disclosed under the *Access to Information Act*
Document divulgué en vertu de la *Loi sur l'accès à l'information*

DEPARTMENT OF EXTERNAL AFFAIRS, CANADA.

NUMBERED LETTER

Security: SECRET

No: 305

Date: April 25, 1961.

Enclosures: 1

Air or Surface Mail: AIR

Post File No:

Ottawa File No.
50048-AF-40
33 S

TO: THE UNDER-SECRETARY OF STATE FOR EXTERNAL AFFAIRS, OTTAWA, CANADA.

FROM: THE PERMANENT MISSION OF CANADA TO THE UNITED NATIONS

Reference: Our letter No. 9 of January 6

Subject: COMBINATIONS OF SECURITY CONTAINERS

References

D-2

1
2
3
4
5
6
7
8
9
10
11

APR 27 1961

J8

In accordance with Circular Document 8/56 you will find attached a list of the new combinations of the security containers in this Mission, with the exception of those in the Communications Section, which are forwarded separately.

J. H. Halstead
Permanent Mission

Internal Circulation

Mr. Andreas

D

Mr Sauvé

file

Distribution to Posts

82A (Rev. 2/52)

Document disclosed under the Access to Information Act
Document divulgué en vertu de la Loi sur l'accès à l'information

D.(2)Division/R.J. Andrews/cm

DEPARTMENT OF EXTERNAL AFFAIRS

MEMORANDUM

File 27/5

TO: MR. TIMMERMAN

FROM: R. J. ANDREWS

REFERENCE:

Security: SECRET

Date: April 19, 1961

File No. 50048-AF-40

14		

SUBJECT: Security Inspection - Permanent Mission of Canada to the United Nations in New York - Feb. 20-24, 1961.

The Security Officer Mr. Halstead, was absent from New York during my recent visit to the mission, although I did have the opportunity of an hour's discussion with him on the afternoon before I left New York. During my stay I dealt primarily with Mr. Holmes who proved to be most helpful and cooperative as were all members of the mission with whom I had occasion speak.

2. It is unfortunate that few of the recommendations contained in the previous report of the security inspection have as yet been carried out and much of this report must therefore be iteration of previous suggestions which remain valid.

SECURITY GUARDS

3. I spoke with Mr. Hammond, Mr. Broughal and Mr. Elms individually.All expressed satisfaction with their posting and with their relations with other members of the post. Their appeared to be no friction among the three security guards although Mr. Broughal (a grade II guard) expressed dissatisfaction with serving under a grade II guard and hoped this situation would change with the eventual posting of Mr. Hammond. A similar situation had existed with he and Mr. Slater in Lisbon and he felt it could lead to a difficult relationship. He indicated a desire to eventually obtain a position in the department which hold opportunities beyond those open to security guards. Both Mr. Holmes and Mr. Halstead expressed their general satisfaction with the conduct and performance of the guards and both felt that Mr. Broughal was the outstanding of the three.

CIRCULATION

Ext. 326 (6/56)

Document disclosed under the *Access to Information Act*
Document divulgué en vertu de la *Loi sur l'accès à l'information*

(a) HOURS OF WORK

4. The guards were working a week-day shift from 1730 to 0930 hours the following day. This had originally been adopted because of the hardships which would have been imposed on previous guards through their having to travel long distances at difficult hours. I spoke with all three guards on this subject and all agreed that transportation to the mission during the early morning hours would not present unusual difficulties. It is strongly recommended therefore that a normal three guard schedule be adopted, similar to that contained in the specimen security guard standing orders. Further that guards posted to the mission in the future, should be advised against acquiring accommodation which would present early morning commuting difficulties.

(b) ABSENCE OF GUARDS FROM POSTS

5. Because of the long shifts worked by the guards their leaving the mission for the purpose of eating a late lunch or early breakfast has been tolerated. During Mr. Leclerc's tour of duty this privilege led to its inevitable abuse. At the present time only Mr. Hammond, who does not bring a lunch, takes advantage of the privilege.

It is strongly recommended that the guards no longer be permitted to leave the mission during a tour of duty.

I certainly agree.

(c) MAINTENANCE OF GUARD LOG

was log seen and initialled by P.S.O.?

6. When speaking with Mr. Hammond the necessity of reporting in detail all security procedures carried out by the guards and all events of an unusual nature was stressed.

LOCAL SECURITY ORDERS

7. Neither local security orders nor standing orders for security guards have as yet been composed. A set of instructions written by Mr. Hammond was noted but found to be inadequate. (see copy attached) When speaking with Mr. Halstead, the necessity for the early promulgation of these orders was stressed. It might be suggested in this regard, that matters of this nature and other routine

agree!

Document disclosed under the *Access to Information Act*
Document divulgué en vertu de la *Loi sur l'accès à l'information*

security administrative problems could be profitably delegated to another member of the staff who would cope with them under Mr. Halstead's supervision. With many other duties demanding of Mr. Halstead's time, routine problems of this nature cannot but impose, an additional and unnecessary hardship.

PHYSICAL SECURITY

8. The physical security of the Mission is complicated by the periodic increase of staff and visitors occasioned by meetings of the General Assembly and by the Mission's location on the 28th floor of a public building. The presence of one of the Asian Missions to the U.N. in a suite of offices directly over the chancery is an example of the security problems raised by this type of tenancy. An illustration of its vulnerability to eavesdropping is provided by an aperture in the floor behind the radiator covers of the conference room through which a pipe passes and through which also, the false ceiling of the office below may be observed. A probe type microphone could be inserted and removed at will. Disregarding such inherent weaknesses however, it is felt that the following suggestions would considerably improve the missions security.

(A) ENTRANCE DOOR

9. Despite the fact that the building housing the mission has a staff of guards, it is my understanding that a number of felonies, attempted felonies have taken place within it. It is suggested therefore that the door be equipped with a peep-hole or inspection port which the guard on duty could use during the quiet hours and thus not expose himself to the risk of being overpowered when alone

chain lock?

(B) THE SENSITIVE AREA

10. At the present time there is no door which may be secured thus closing the area containing the offices of Canadian staff from the outer public reception room. It is suggested that the present archway between the reception room and the sensitive area be converted to receive a wooden door equipped with a security lock.

This might be difficult.

...4/

Document disclosed under the *Access to Information Act*
Document divulgué en vertu de la *Loi sur l'accès à l'information*

(C) KEY BOX

11. In order to obtain the full advantage of the change suggested in (b) above, the reception room should be equipped with a key box in which all security keys could be kept. This would be particularly advantageous during those times when a two guard schedule must be followed and the front door key must be carried from the mission by the guards and by Communications personnel. At the present time, theft or other compromise of this Key would give access to the entire Sensitive Area short of the Registry and Com-Centre.

Not if offices are equipped with locks as suggested in 17.

(D) COMMUNICATIONS CENTRE

12. The hatch into the line room still requires strengthing, either by the addition of bars or grill or by the replacement of the present thin plywood with ¾ inch material in a strongly mounted track and secured with an approved lock.

13. There is still a need for the guards to be provided with the means to check the interior of the communications room and to achieve this, it is suggested that an inspection port or peep-hole be mounted in the common wall between it and the line room.

This will be expensive — perhaps a simple periscope would serve.

14. The grill door of the Comcentre still requires modification, as the present inner catch deprives the lock of any security value.

(E) REGISTRY

15. At the present time the Registry is left unlocked in the evening under the control of the guards who place there any material left exposed. It is recommended that the registry be locked by registry personnel and that the guards should not have access to it or to the combination of the vault door. An inspection port should also be provided and, if deemed expedient, a night depositry.

16. Material being distributed from registry to various officers of the mission is placed in a pigeon hole cabinet in the outer registry office. Access to such material is virtually unlimited by all personnel of the mission. This procedure is particularly undesirable during the meetings of the General Assembly, when the mission is

Agree!

Document disclosed under the *Access to Information Act*
Document divulgué en vertu de la *Loi sur l'accès à l'information*

visited by an abnormal number of guests. I spoke with the registry staff about this matter and they felt that to place the cabinet within the registry and serve the various persons through the grill would require another member in registry. It is recommended nevertheless that the cabinet be placed within the registry confines or that a procedure of personal rounds of delivery by the registry staff be instituted at least during the General Assembly.

or collection at regular hours –

As with the grill door of the Comcentre, the registry grill requires modification.

(F) SECURITY OF INDIVIDUAL OFFICES

17. As was previously recommended, offices should be equipped with a yale 048 lock so that security of files and papers may be maintained during brief absences without the necessity of locking them in security containers. The guards would also be assisted in maintaining effective control over char staff in the sensitive area.

(G) TAYLOR SAFE

18. At the present time the mission is obtaining little or no advantage from its most secure container, the Taylor safe. It contained the one time pads, packaged and sealed, but is used mainly by the guards to store their logs, seizures, keys etc. It is seldom locked by the Registry staff who leave it open for use by the guards who have its combination.

It is recommended that the safe be put into use by the registry staff for the storage of Top Secret material presently held on files in less secure containers. This will of course, require the systematic removal of such material from present files and the segregation of incoming material.

(H) SECURITY CONTAINER FOR USE BY SECURITY GUARDS

19. It is urged that the recommendation contained in the previous inspection report for the provision of a security container for use of the guards be implemented. This will be essential if other recommendations contained here are carried out.

(I) KEY CONTROL

20. Registry and Communications personnel carry keys

Document disclosed under the *Access to Information Act*
Document divulgué en vertu de la *Loi sur l'accès à l'information*

when? for the day grills and line room away from the mission. The utilization of the guards for the maintenance of a key control system as described in the specimen security orders would make this risk unnecessary.

21. It is again recommended that a sealed key to the front door security lock be left with the Canadian Consulate for use in an emergency.

(J) SECURITY OF COMBINATIONS

22. A record of all combinations is kept by the security guards, unsealed, in the Taylor Safe. This in effect gives the guards access to all containers in the mission and is incompatible with good security and the very basic but important "need to know" principle.

It is urged that this practice be discontinued, that the guards retain only the combination to their own container and that procedures for setting and reporting combinations as contained in Circular Document Admin. No. 8/56 be followed.

23. It is also the practice to place the same combination on all the security containers in the registry with the exception of the Taylor Safe. It is recommended that identical combinations should be placed on not more than four containers. Such combinations may be then encoded by the addition of an arbitrary additive and kept in a drawer of one of the security shells. The latter container should have a combination which is assigned to it alone and which of course must be memorized.

(K) WINDOW CLEANING

24. During my visit a cradle suspended from the roof and carrying several window washers was noted a few feet from the registry windows. Sensitive papers left exposed on a desk for a long period could be thus compromised and it is suggested that this be brought to the attention of the staff through local security orders.

25. It was noted that the documents marked for immediate destruction which had been forwarded with our letter DS-530 of September 14, 1959 were still held on the missions security file.

R.J. ANDREWS.

Document disclosed under the *Access to Information Act*
Document divulgué en vertu de la *Loi sur l'accès à l'information*

CONFIDENTIAL

Spot checks for two guard duty

1. Guard on duty will make a tour of all offices by 1230. hours he will remain on duty till everyone as left.
2. B efore leaving the mission guard will make a check of all the mission making sure everything is in good order.
3. Mission will be checked every three hours after. Untill 2300. hours when duty man will report and remain till 0900.hours.
4. When Comm. staff is in mission the top lock on main door will be locked only. When no one is in the mission the securty lock on main door will be locked at all times. This will mean that the securty guard on duty will have to carry a key for the securty lock of the front door. It is important that this key is not missed placed or lost and is in safe keeping at all times.
5. Duty guard will make sure that the duty officer as his phone number where he can be reach.
6. Duty guard will have phone number where Comm. duty man can be reached.

FOR XMAS & NEW YEARS HOLIDAYS GUARD WILL REPORT AT 2200 hrs TILL 0800 hrs. THIS IS FOR COM. CENTRE IT MUST BE COVERED FOR 24 HRS PER DAY.

Document disclosed under the *Access to Information Act*
Document divulgué en vertu de la *Loi sur l'accès à l'information*

DEPARTMENT OF EXTERNAL AFFAIRS, CANADA.

NUMBERED LETTER

TO: THE UNDER-SECRETARY OF STATE FOR EXTERNAL AFFAIRS, OTTAWA, CANADA.

FROM: PERMANENT MISSION OF CANADA TO THE UNITED NATIONS, NEW YORK

Reference: YOUR LETTER DS-35 OF JANUARY 30, 1961

Subject: EXPENDITURES FOR LOCKWORK AND TAXI FARES FOR SECURITY GUARDS.

Security: CONFIDENTIAL

No: 195

Date: MARCH 16, 1961

Enclosures: AIR

Air or Surface Mail:

Post File No:

Ottawa File No.	
50048-AF-40	
33	50

References

97

The two keys for the door to our comcentre, which were cut by Mr. Hammond, were required urgently for use by Mr. R. Lafortune, Communicator 2, who was added to our staff for the first part of the fifteenth session UNGA and by Mr. George Collins, Communicator 2, who was added to our staff as a supernumerary employee to assist in coping with the additional work-load resulting from extension of the working hours in the comcentre. The key used by Mr. Lafortune was retained here and re-issued to Mr. G. Matthews, Communicator 2, who has been added to our staff for the second part of the fifteenth session. No breach of security was committed by this action. However, we have noted your request for a certification to that effect in future cases of this kind.

2 With reference to petty cash voucher No. 29 covering a taxi fare for Mr. C.E. Elms, the following is an explanation of the necessity for this expenditure. On his previous shift Mr. Elms had changed the combinations on the locks on the filing cabinets in the Registry Section. The supervisor of the Registry Section did not attempt to open these cabinets before Mr. Elms had departed for the day. Difficulty was experienced in opening three of the locks concerned and Mr. Holmes, our Administrative Officer, asked Mr. Elms to return to the office premises immediately and authorized payment of his taxi fare for this purpose. The difficulty in opening the locks on the filing cabinets has been resolved.

Internal Circulation

D

D-2

J. H. Halstead
Permanent Mission.

Distribution to Posts

~~Mr. Andrews~~ Discussed para 2 in New York
Mr. Reyes for necessary action
and file

21/3/61

Ext. 182A (Rev. 2/52)

Document disclosed under the *Access to Information Act*
Document divulgué en vertu de la *Loi sur l'accès à l'information*

1961 MAR 21 AM 10:45 NO ENCLOSURES

Document disclosed under the Access to Information Act
Document divulgué en vertu de la Loi sur l'accès à l'information

50048-AE-40

SEEN BY THE MINISTER

MS

March 3, 1961.

Question No. 177 Mr. Martin March 2, 1961

(3). Answer Given by SSEA in House 8/3 Ca.

1. What precautions are taken by the Government and by the Department of External Affairs to ensure privacy and secrecy in long distance telephone calls between Ottawa offices and Canadian missions outside of Canada, particularly at the United Nations?

2. Has the Canadian Government a private telephone line to the Canadian Mission at the United Nations, or must long distance calls go through the United Nations switchboard?

3. Has any instance been reported to the Canadian Government of a leak of private or secret information as a result of telephone discussions between Government officials in Ottawa and Members of Canadian missions at the United Nations, or elsewhere?

4. If so, what were the circumstances, and the location, in any such instance?

Answer by: Honourable Howard C. Green, Secretary of State for External Affairs

1. Telephone communications, including those extending beyond Canada, generally are considered to be insecure. Users of the telephone, therefore, are cautioned not to discuss sensitive classified matters on this medium of communication. There are, of course, adequate and secure means by which the Canadian Government communicates with its representatives abroad including the Canadian Delegation to the United Nations.

2. The answer to both parts of this question is no. However, when delegates receive telephone calls at the United Nations Headquarters, these obviously go through the United Nations switchboard.

3. The answer to No. 3 is no.

4. The question in No. 4 has been answered by reply to question No. 3.

Gek

Document disclosed under the *Access to Information Act*
Document divulgué en vertu de la *Loi sur l'accès à l'information*

MINISTERE
7083
MAR 3 1961

Document disclosed under the *Access to Information Act*
Document divulgué en vertu de la *Loi sur l'accès à l'information*

MEMORANDUM

FROM THE OFFICE OF

THE SECRETARY OF STATE FOR EXTERNAL AFFAIRS

To D.L. (2) Division

March 2, 1961.

I should like to draw your attention to a question relating to this Department which has been asked in the House of Commons. This is Question No. 177 by Mr. Martin
For your ready reference, it reads as follows:-

1. What precautions are taken by the Government and by the Department of External Affairs to ensure privacy and secrecy in long distance telephone calls between Ottawa offices and Canadian missions outside of Canada, particularly at the United Nations?

2. Has the Canadian Government a private telephone line to the Canadian Mission at the United Nations, or must long distance calls go through the United Nations switchboard?

3. Has any instance been reported to the Canadian Government of a leak of private or secret information as a result of telephone discussions between Government officials in Ottawa and Members of Canadian missions at the United Nations, or elsewhere?

4. If so, what were the circumstances, and the location, in any such instance?

It would be appreciated if your Division could undertake the preparation of a reply (and if appropriate, coordinate the contributions from other Divisions) in accordance with the procedure outlined in Section 342.3 of the Departmental Manual of Regulations and Instructions.

JM Stanmore

Minister's Office

Document disclosed under the *Access to Information Act*
Document divulgué en vertu de la *Loi sur l'accès à l'information*

March 3, 1961.

Question No. 177 Mr. Martin March 2, 1961

1. What precautions are taken by the Government and by the Department of External Affairs to ensure privacy and secrecy in long distance telephone calls between Ottawa offices and Canadian missions outside of Canada, particularly at the United Nations?

2. Has the Canadian Government a private telephone line to the Canadian Mission at the United Nations, or must long distance calls go through the United Nations switchboard?

3. Has any instance been reported to the Canadian Government of a leak of private or secret information as a result of telephone discussions between Government officials in Ottawa and Members of Canadian missions at the United Nations, or elsewhere?

4. If so, what were the circumstances, and the location, in any such instance?

Answer by: Honourable Howard C. Green, Secretary of State for External Affairs

1. Telephone communications, including those extending beyond Canada, generally are considered to be insecure. Users of the telephone, therefore, are cautioned not to discuss sensitive classified matters on this medium of communication. There are, of course, adequate and secure means by which the Canadian Government communicates with its representatives abroad including the Canadian Delegation to the United Nations.

2. The answer to both parts of this question is no. However, when delegates receive telephone calls at the United Nations Headquarters, these obviously go through the United Nations switchboard.

3. The answer to No. 3 is no.

4. The question in No. 4 has been answered by reply to question No. 3.

Document disclosed under the *Access to Information Act*
Document divulgué en vertu de la *Loi sur l'accès à l'information*

File A 3/3

DEPARTMENT OF EXTERNAL AFFAIRS

50048-AF-40	
33	—

Subject

Date March 2/61 Publication GLOBE AND MAIL

1	
2	
3	
4	
5	
6	
7	
8	
9	
10	

MAR 3 1961

Martin to Ask If UN Phones Leak Secrets

From the Ottawa Bureau of The Globe and Mail

Ottawa, March 1—A report in The Windsor Star regarding a statement made by Philip Deane, a contributor to The Globe and Mail from the United Nations, has prompted Paul Martin (L, Essex East) to ask the Government if secret information relayed from Ottawa is being leaked through the UN switchboard.

Mr. Martin said today he is placing a question on the order paper tomorrow, which the Government will be required to answer next week. The MP said the question is based largely on the report of Mr. Deane's statement which he had read in the Windsor paper.

The Windsor Star report stated that Mr. Deane, speaking at a dinner in Toronto last week, had indicated it was possible to get confidential information through the main switchboard at the United Nations.

(Mr. Deane said last night that persons called at the UN delegates' lounge are paged over loudspeakers and that, in the press of work during a general assembly meeting, the paging and the response to paging could be revealing.

(Mr. Deane said that he made it his business to observe, where possible, who was calling whom. He said that he had made light-hearted references to this in his comments at a private dinner given by the directors of The Globe and Mail Feb. 21. He had made absolutely no claim to having any knowledge of the content of the calls.)

Mr. Martin is asking what precautions are taken by the Government and the Department of External Affairs to insure privacy and secrecy in long-distance calls to the UN. He wishes to know if the Government has a private line to the Canadian mission at the UN, or must long distance calls go through the UN switchboard.

The MP also wishes to know if the Government has received any reports of a leak of private or secret information as a result of telephone discussions between Government officials in Ottawa and members of Canadian missions at the UN.

Document disclosed under the *Access to Information Act*
Document divulgué en vertu de la *Loi sur l'accès à l'information*

File

DEPARTMENT OF EXTERNAL AFFAIRS, CANADA

OUTGOING MESSAGE

DATE	FILE		SECURITY
17/2/61	50048-AB-40		UNCLAS.
	55	50	

FM: EXTERNAL OTTAWA

NUMBER	PRECEDENCE	COMCENTRE USE ONLY	
DS- 220	PRIORITY		

TO: PERMIS NEW YORK

INFO:

Ref.:

Subject:

ATTENTION: MR. W. HOLMES

MR. ANDREWS ARRIVING NEWYORK AS SCHEDULED. PLEASE ARRANGE ACCOMMODATION AND ADVISE.

LOCAL DISTRIBUTION

ORIGINATOR	DIVISION	PHONE	APPROVED BY
SIG. (Sgd.) NAME. R.J. Andrews/mc	D.L.(2)	6-7996	SIG. NAME. J. Timmerman

EXT. 18 (REV. 12/56)

Document disclosed under the *Access to Information Act*
Document divulgué en vertu de la *Loi sur l'accès à l'information*

D.L.(2) Div/J. Timmerman/mc

Finance Division

CONFIDENTIAL

February 13, 1961.

D.L.(2) Division

50048-AF-40
55 | c

Visit to New York - Mr. Ross J. Andrews

Would you please make arrangements for Mr. Andrews to proceed to New York by air on Sunday, February 19 and to return from New York by air on February 25. This visit will be for the purpose of inspecting our United Nations Delegation chancery for security.

2. We should be glad if you would also make the necessary hotel reservation and provide a travel advance of $100.00.

D.L.(2) Division

Document disclosed under the Access to Information Act
Document divulgué en vertu de la Loi sur l'accès à l'information

DL(2)W.M. Agnes/af/rsc

DEPARTMENT OF EXTERNAL AFFAIRS, CANADA. *(FILE COPY)*

NUMBERED LETTER

TO: THE CANADIAN PERMANENT MISSION TO THE UNITED NATIONS, NEW YORK, N.Y.

FROM: THE UNDER-SECRETARY OF STATE FOR EXTERNAL AFFAIRS, OTTAWA, CANADA.

Reference: Mission's Accounts for October 1960

Subject: Expenditures for Lockwork and Taxi Fares for Security Guards

Security: CONFIDENTIAL

No: DS- 35

Date: January 30, 1961

Enclosures:

Air or Surface Mail: Courier

Post File No:

Ottawa File No. 50048-AF-40

33 | 50

References

We have noted from Petty Cash voucher No. 30 that three keys were purchased for the mission; one of these was reported not to be a security key while the other two for a door to your comcentre were cut by Mr. Hammond. We assumed, therefore, that no breach of security was committed but we should have liked to have certification to that effect from the Security Officer in accordance with the requirements in Circular Document Admin. 15/59 of April 19, 1959. It would be appreciated if you would bear this in mind in future when expenditures for lockwork and keys are reported.

2. We have also noted that Petty Cash voucher No. 29 reports expenditures incurred for taxi fare for Mr. C.E. Nelms, a security guard who apparently was called to the mission to open security containers in an emergency. Would you please inform us of the nature of the emergency and of the security containers that the security guard was called upon to open.

Internal Circulation

J. TIMMERMAN

Under-Secretary of State
for External Affairs

Distribution to Posts

Ext. 181B (Rev. 2/52)

Document disclosed under the *Access to Information Act*
Document divulgué en vertu de la *Loi sur l'accès à l'information*

DEPARTMENT OF EXTERNAL AFFAIRS, CANADA.

NUMBERED LETTER

TO: THE UNDER-SECRETARY OF STATE FOR EXTERNAL AFFAIRS, OTTAWA, CANADA.

FROM: THE PERMANENT MISSION OF CANADA TO THE UNITED NATIONS

Reference: Our letter No. 690 of October 20, 1960.

Subject: COMBINATIONS OF SECURITY CONTAINERS

Security: SECRET

No: 17

Date: January 11, 1961.

Enclosures: 1

Air or Surface Mail: AIR

Post File No: 11-4

Ottawa File No.	
50048-AE40	
33	50

References

D-2

JAN 12 1961

Attached is a sealed envelope containing the combinations of the security containers in the Communications section of this Mission, which were changed yesterday.

J. H. Halstead
Permanent Mission

Internal Circulation

D

Mr. Sauvé
Please speak.
MM
12/1/61

file

Distribution to Posts

Ext. 182A (Rev. 2/52)

Document disclosed under the Access to Information Act
Document divulgué en vertu de la Loi sur l'accès à l'information

DEPARTMENT OF EXTERNAL AFFAIRS, CANADA.

NUMBERED LETTER

TO: THE UNDER-SECRETARY OF STATE FOR EXTERNAL AFFAIRS, OTTAWA, CANADA.

FROM: Permanent Mission of Canada to the United Nations, New York

Reference: Our letter No. 605 of September 13/60.

Subject: Combinations of Security Containers.

Security: SECRET

No: 9

Date: January 6, 1960

Enclosures: 1

Air or Surface Mail: Air

Post File No: 11-4

Ottawa File No.	
50048-AF-40	
33	50

References

D-2

1 2 3 4 5 6 7 8 9 10 11

JAN 9

In accordance with Circular Document 8/56 you will find attached a list of the new combinations of the security containers in this Mission, with the exception of those in the Communications Section, which are forwarded separately.

J. H. Halstead
Permanent Mission

Mr. Sauvé
for discussion

File

MILOI

Internal Circulation

D

Distribution to Posts

Ext. 182A (Rev. 2

Document disclosed under the *Access to Information Act*
Document divulgué en vertu de la *Loi sur l'accès à l'information*

1961 JAN 11 : 13

Document disclosed under the *Access to Information Act*
Document divulgué en vertu de la *loi sur l'accès à l'information*

D.L.(2) Div./J. Timmerman/me

DEPARTMENT OF EXTERNAL AFFAIRS

MEMORANDUM

File

TO: Mr. R.J. Andrews,
D.L.(2) Division

FROM: J. Timmerman

REFERENCE:

Security SECRET

Date December 21, 1960.

File No. 50048-AF-40

55

SUBJECT: Security Arrangements - United Nations, New York.

I expect to see Mr. Dobell before he leaves on posting to New York early in the New Year. When I do, I shall speak to him about the attached memorandum from Mr. Gill to Mr. Starnes on the visit of the Liaison Team to the Permanent Mission, New York, dated August 15, 1960. I shall explain that we have been hoping to receive something from New York in reply to our letter DS-396 of 8 July 1959 to the mission, and letters of April 20, 1960 and May 25, 1960 to Mr. Halstead. I shall emphasize that unless we receive their local security orders and comments on the various points raised in correspondence, we shall not be able to delay longer but be compelled to send a harsh letter to the post signed by either Mr. Gill or the Under-Secretary. We appreciate that they have had their difficulties, especially during the last General Assembly. However, this matter has now been in the process of being dealt with for some 18 months.

2. Please bring up to me by the end of January, if we have not heard from New York ~~again~~.

J. Timmerman

CIRCULATION

Ext. 326 (6/56)

Document disclosed under the Access to Information Act
Document divulgué en vertu de la Loi sur l'accès à l'information

D.L.(2) Div./W.M. Agnes/J. Timmerman/mc

PERSONAL & CONFIDENTIAL

OTTAWA, December 16, 1960.

50048.AF-40
33 50

Dear Bill:

Thank you for your letter of December 14, 1960 which was in reply to our two communications of September 7 and November 15 on the subject of electric shredders for PERMISNY.

We agree with you that even with two machines the destruction of 60 pounds of material per day would place too great a strain on the staff of the mission. I should hasten to add that our proposal to send you two "Bandashred", Model 4, was a somewhat desperate solution to a problem which has been nagging us both for some time. However, we have just learned that the makers of the "Bandashred", probably because of the success they experienced with the smaller model, are introducing a more powerful industrial type shredder which is capable, we are told, of a capacity of 400 lbs. per hours. The problem regarding that machine is that the width of the cut is 1.9 mm., which is nearly double the maximum width we consider acceptable for security reasons. We have, therefore, suggested to the manufacturer that the length of the strip of paper be reduced substantially from some 3/4 of an inch to something under 1/4 of an inch, if at all possible. We are still negotiating with the agents in Canada and we have good hopes that this time we will be successful in securing an acceptable machine which will solve once and for all your problem of disposal of classified waste at your mission.

/ ...2

USS-1366

W.H. Holmes, Esq.,
Permanent Mission of Canada to
the United Nations,
NEW YORK, N.Y.

Document disclosed under the *Access to Information Act*
Document divulgué en vertu de la *Loi sur l'accès à l'information*

I should perhaps mention in reply to a point made in your letter of December 14 that it would be perfectly satisfactory to accumulate the classified waste during the day for the guards to destroy during the quiet hours of the night.

Thank you for your comments which were helpful. The ball is now in our court and we shall press the matter with all proper vigour to obtain a satisfactory solution in the near future.

Yours sincerely,

J. TIMMERMAN

(J. Timmerman)

Document disclosed under the Access to Information Act
Document divulgué en vertu de la Loi sur l'accès à l'information

PERSONAL AND CONFIDENTIAL

PERMANENT MISSION OF CANADA TO THE UNITED NATIONS
MISSION PERMANENTE DU CANADA AUPRÈS DES NATIONS UNIES

750 Third Avenue,
New York 17, N.Y.

December 14, 1960.

For Yours: Reply due 15/12.

500 45-AME 40
33

Dear Tim,

Please accept my humble apologies for not replying to your letters of September 7 and November 15 until now but, as you know, this session has been the most hectic and most unique in the history of the United Nations. On the Admin. side, when have we ever had 25-30 Heads of State at the U.N. at one time with all the strict security regulations and, in addition, we have had two visits of the Prime Minister and party and ten visits of the Minister and his party, all V.I.P. affairs.

With regard to your enquiry about the use of a "Bandashred", the unit ordered for Los Angeles had not yet arrived when I departed last June. I have never seen one in action and am wondering if there is a supplier in New York that could demonstrate this machine for us.

Our volume of waste is approximately 60 lbs. per day at the present time and in accordance with paragraph 6 of your letter of July 6 it would take five hours of an operators time each day for destruction. This would certainly place a strain on the time of our present administrative staff.

If a machine were installed here, would it be possible for the security guards to do this work during the quiet hours? The only assistance I could possibly offer otherwise to do this job would be to have a confidential messenger do some of it in his spare time. Of course, there is no such spare time during U.N. Assembly periods.

If I am ever in Ottawa, I shall be certain to drop in and see the "Bandashred" in operation. However, as things look now, it is unlikely that I will be visiting the Department before Spring.

Mr. J. Timmerman,
Defence Liaison (2) Division,
Department of External Affairs,
Ottawa, Canada.

...2

Document disclosed under the *Access to Information Act*
Document divulgué en vertu de la *Loi sur l'accès à l'information*

If I can be of any more assistance to you in this problem, please do not hesitate to let me know and I promise I shall give your enquiries more prompt attention.

Yours sincerely,

Bill

W. H. Holmes.

Document disclosed under the *Access to Information Act*
Document divulgué en vertu de la *Loi sur l'accès à l'information*

D.L.(2)Division/W.H. Agreed/dr

NSS-1143

PERSONAL & CONFIDENTIAL

50048-AF-40
33 | 50

Ottawa, November 15, 1960.

Dear Bill,

You will recall that we wrote you recently on the question of disposal of classified waste at your mission. I wonder if the hustle and bustle of the current United Nations General Assembly left you enough time to look into this problem. Please let us have a reply as soon as possible as we should like to settle this old and vexing problem.

Yours sincerely,

J. TIMMERMAN

(J. Timmerman)

W.M. Holmes, Esq.,
Permanent Delegation to the United Nations,
NEW YORK.

Document disclosed under the *Access to Information Act*
Document divulgué en vertu de la *Loi sur l'accès à l'information*.

50048-AF-4
331 50

D

ACTION COPY

Mr Keyes

What are those contai
please

FM PERMISNY OCT27/60 CONFD
TO EXTERNAL 1952

SARGENT AND GREELEAF PADLOCKS

WE HAVE RECEIVED A SHIPMENT OF FIVE NEW FILING CABINETS EQUIPPED WITH BAR AND HASP BUT DO NOT RPT NOT HAVE ANY SECURITY LOCKS FOR THEM. WE SHOULD BE GRATEFUL IF YOU WOULD FORWARD SIX SARGENT AND GREENLEAF COMBINATION PADLOCKS FOR THESE CABINETS BY EARLIEST

BAG. 0

D.2

SUPPLIES AND PROPERTIES
FOR FILE
ACTION TAKEN
TELEGRAM
LETTER
ORDERD
BY:
DATE

8247A

Document disclosed under the Access to Information Act
Document divulgué en vertu de la Loi sur l'accès à l'information

D.L.(2) Division

9118-E-40
50048-CA-40
50048-AF-40

Confidential

Personnel Division

Defence Liaison (2) Division

October 7, 1960.

PERMIS, New York Telegram 1461 of September 16, 1960.

Employment of Security Guard as Telephone Operator during United Nations General Assembly.

As you know we have agreed, despite our misgivings, to the posting of Mr. Parker to New York for the current general assembly of the United Nations.

2. We are not convinced that the Permanent Mission have made a satisfactory case for the use of an additional guard on security grounds. It is quite clear, however, that they have a real need for an additional telephone operator since, according to their telegram under reference, there are some 44 hours of extra work to cover during the session. Despite the mission's reference to "Limited telephone duties", it seems that, in addition to security duties, the extra guard will therefore spend a full work week at the switchboard. However, as we did not wish to prevent the mission from operating efficiently during the difficult period of the general assembly we agreed, with some reluctance to Mr. Parker's posting.

3. We understand the mission served notice that, if we could not send an extra guard, they could not guarantee the security of the mission during the assembly and that they would so inform the Minister. We cannot refrain from observing that this argument does not seem to stand up to examination since their real requirement is for an extra telephone operator/receptionist rather than a security guard who as he will be fully occupied on telephone duties obviously cannot contribute much to the security of the mission. We hope that the timely recruitment of a suitable telephone operator/receptionist for the next assembly will make unnecessary what is obviously a misuse of a security guard.

(orig. signed by Mr. Zimmerman)

Defence Liaison (2) Division.

Document disclosed under the *Access to Information Act*
Document divulgué en vertu de la *Loi sur l'accès à l'information*

DEPARTMENT OF EXTERNAL AFFAIRS, CANADA.

NUMBERED LETTER

TO: THE UNDER-SECRETARY OF STATE FOR EXTERNAL AFFAIRS, OTTAWA, CANADA.

FROM: The Permanent Mission of Canada to the United Nations, New York

Reference: Our letter No. 396 of June 10, 1960

Subject: Combinations of Security Containers

Security: SECRET

No: 690

Date: October 20, 1960

Enclosures: One

Air or Surface Mail: Air

Post File No: 11-4

Ottawa File No.	
50048-AF-40	
33	50

References

D-2

1
2
3
4
5
6
7
8
9
10

OCT 24 1960

Internal Circulation

D

Distribution to Posts

Attached is a sealed envelope containing the combinations of the security containers in the Communications section of this Mission, which have been changed following the departure of Mr. S. Lachapelle.

J H Halstead
Permanent Mission

Mr. Lacoste file
24/10/60

Ext. 182A (Rev. 2/52)

Document disclosed under the *Access to Information Act*
Document divulgué en vertu de la *Loi sur l'accès à l'information*

20 OCT 20 PM 12:27

Document disclosed under the *Access to Information Act*
Document divulgué en vertu de la *Loi sur l'accès à l'information*

EM PERMISNY SEP16/60 CONFD

TO EXTERNAL 1461 OPIMMED

REF YOURLET P355 SEP1

FIFTEENTH SESSION UNGA-ADMIN PERSONNEL

WE ARE GRATEFUL FOR THE STAFF YOU ARE PROVIDING TO DEL TO THE 15TH SESSION OF UNGA FOR STENOGRAPHIC, ACCOUNTING AND COMMUNICATIONS SVCS, AS OUTLINED IN YOUR REFLET. WE MUST POINT OUT, HOWEVER, THAT YOUR PROPOSALS WITH RESPECT TO REGISTRY AND SECURITY GUARDS WILL NOT RPT NOT MEET THE KNOWN DEL REQUIREMENTS AND WE HOPE YOU WILL GIVE THEM URGENT RECONSIDERATION, FOR WHICH THE FOLLOWING COMMENTS MAY BE HELPFUL.

REGISTRY

YOU WILL ALREADY BE AWARE, FROM THE ON-THE-SPOT ASSESSMENTS MADE BOTH BY MR LOGAN (HEAD OF REGISTRY) IN MAY AND THE VISITING LIAISON TEAM IN JUN AND FROM OURLET 588 AUG30, THAT THE VOLUME AND COMPLEXITY OF THE MATERIAL HANDLED AT THIS MISSION ARE ALREADY MORE THAN ENOUGH FOR OUR PRESENT REGISTRY STAFF. THIS STAFF INCLUDES A REGISTRY CLERK (LARKIN) WHO IS TECHNICALLY QUOTE SUPERNUMERARY UNQUOTE (BECAUSE HE HAS NOT RPT NOT YET BEEN APPROVED AS PART OF OUR PERMANENT ESTABLISHMENT) BUT WHO HAS BEEN RECOMMENDED FOR INCLUSION IN OUR ESTABLISHMENT PRECISELY BECAUSE THE PREVIOUS STAFF OF TWO WAS CLEARLY INSUFFICIENT FOR THE EXISTING WORKLOAD. THIS STAFF OF THREE WILL NOT RPT NOT BE SUFFICIENT TO HANDLE THE ADDITIONAL WORK RESULTING FROM THE ASSEMBLY SESSION AND THE PRESENCE OF THE ASSEMBLY DEL.

3. THE THREE CLERK-MESSENGERS YOU ARE PROVIDING FOR THIS ASSEMBLY SESSION WILL OF COURSE BE REQUIRED AGAIN FOR THE ROUTINE DUTIES THEY HAVE PERFORMED AT PREVIOUS SESSIONS. YOU WILL NO RPT NO DOUBT AGREE, HOWEVER, THAT THEY CANNOT RPT NOT BE EXPECTED TO HANDLE THE MORE DIFFICULT REGISTRY TASKS OF CLASSIFICATION AND ROUTING. FOR SUCH DUTIES, AND ALSO TO PROVIDE A SUPERVISOR TO ALTERNATE ON PAGE TWO 1461.

Document disclosed under the *Access to Information Act*
Document divulgué en vertu de la *Loi sur l'accès à l'information*

LATE DUTY WCTH OUR OWN SENIOR REGISTRY CLERK, WE SHALL REQUIRE AN ADDITIONAL SENIOR CLERK. WITHOUT HIM THE REGISTRY WILL NOT RPT NOT BE ABLE TO PROVIDE THE MINISTER AND THE OTHER MEMBERS OF THE ASSEMBLY DEL WITH THE REGISTRY SERVICES THEY WILL EXPECT AND DESERVE.

SECURITY GUARDS

4. THE ASSEMBLY DEL WILL AGAIN REQUIRE, AS IN THE PAST, AN ADDITIONAL SECURITY GUARD IN ORDER TO PROVIDE THE PREMISES OF THE PERMIS WITH TWO GUARDS DURING THAT PERIOD OF THE AFTERNOON AND EVENING WHEN ONE IS REQUIRED TO SUPERVISE CHAR STAFF IN THE VARIOUS OFFICES AND ANOTHER IS REQUIRED TO GUARD THE ENTRANCE.

5. DURING THE LAST TWO SESSIONS OF THE ASSEMBLY WE HAVE ALSO USED THE SECURITY GUARD ON DUTY AT THE ENTRANCE FOR LIMITED PHONE SWITCHBOARD DUTIES, AS WE DO WITH OUR OWN GUARDS DURING THE BALANCE OF THE YEAR. THIS USE OF GUARDS WAS SPECIFICALLY APPROVED FOR THE PREVIOUS ASSEMBLY SESSIONS AND WAS ALSO DISCUSSED WITH THE INSPECTION TEAM, WHO AGREED THAT THIS WAS A REASONABLE AND LEGITIMATE ARRANGEMENT.

6. THE ALTERNATIVES, AS WE HAVE POINTED OUT BEFORE, ARE UNSATISFACTORY. THEY WOULD INVOLVE THE PROVISION FROM OTT OR THE HIRING LOCALLY OF ONE OR MORE OPERATORS TO COVER THE FORTY-TWO TO FORTY-FOUR HOURS PER WEEK FOR WHICH PHONE SERVICE IS REQUIRED IN ADDITION TO THAT COVERED BY OUR ONE REGULAR OPERATOR. THE LATTER ALTERNATIVE IS IN ANY CASE NOT RPT NOT RECOMMENDED BECAUSE THE SECURITY GUARD WOULD THEN HAVE THE ADDITIONAL DUTY OF WATCHING THE LOCALLY ENGAGED EMPLOYEE.

7M WE THEREFORE PROPOSE THAT AN ADDITIONAL SECURITY GUARD BE PROVIDED AND THAT HE BE INSTRUCTED BEFORE COMING THAT HE WILL BE EXPECTED TO DO HIS REASONABLE SHARE OF LIMITED PHONE SWITCHBOARD DUTY.

RITCHIE

Document disclosed under the *Access to Information Act*
Document divulgué en vertu de la *Loi sur l'accès à l'information*

Unclassified

50048-AF	40
21	✓

file

Ottawa, September 30th.1960.

FROM: THE DEPARTMENT OF EXTERNAL AFFAIRS, CANADA

TO: The Permanent Mission of Canada to the United Nations, New York.

We are forwarding by (Surface 70) the following:- Oct 4

1 (One) Package of Security Guard Log Forms.(500 approx.)

Please refer to your letter no.622 of Sept.20th.1960.

When the above has been received and checked, would you kindly sign and return the original form Ext. 27 R.

Return to rm.319,
D.L.(2) Div.E.B.

for

Under-Secretary of State
for External Affairs

This is to certify that the above mentioned items have been received in good order.

Place | Date | Signature

Ext. 27 R (Rev. 2/53)

Document disclosed under the *Access to Information Act*
Document divulgué en vertu de la *Loi sur l'accès à l'information*

DEPARTMENT OF EXTERNAL AFFAIRS, CANADA

OUTGOING MESSAGE

file
10/10

DATE	FILE	SECURITY
SEPT.29/60	12048-AF-40 Personnel folder Broughal	

FROM: EXTERNAL OTTAWA

NUMBER	PRECEDENCE	COMCENTRE USE ONLY
P-1039		

TO: PERMIS NEW YORK

INFO:

Ref.: REYOURLET 602 OF SEPT.12/60

Subject:

PLEASE CONFIRM LAST DAY OF DUTY AT YOUR MISSION FOR H.D. LOGAN. REPLACEMENT, W.J. BROUGHAL, SECURITY GUARD 2 ARRIVING NEW YORK BY RAIL OCT.6 AM. BROUGHAL IS MARRIED, TWO DAUGHTERS AGED TEN YEARS AND ELEVEN YEARS. PLEASE RESERVE SUITABLE HOTEL ACCOMMODATION AND CONFIRM. BROUGHAL IS ON CROSSPOSTING FROM LISBON AND ARRANGEMENTS HAVE BEEN MADE FOR FORWARDING OF EFFECTS DIRECT FROM LISBON TO NEW YORK.

LOCAL DISTRIBUTION: No standard. Local done by division.

cc. Finance
Supplies & Properties (Shipping
D.L.(2)

ORIGINATOR	DIVISION	PHONE	APPROVED BY
SIG. ..... NAME ....E.H.Woodyard/dc....	Personnel	2-2506	SIG. ..... NAME ...M.Gauvreau...

EXT.18(REV.12/56)

Document disclosed under the *Access to Information Act*
Document divulgué en vertu de la *Loi sur l'accès à l'information*

D.L.(2)Divisi

DEPARTMENT OF EXTERNAL AFFAIRS, CANADA. *(FILE COPY)*

NUMBERED LETTER

TO: The Permanent Mission of Canada to the United Nations, NEW YORK.

FROM: THE UNDER-SECRETARY OF STATE FOR EXTERNAL AFFAIRS, OTTAWA, CANADA.

Reference: Your letter 603 of September 13, 1960.

Subject: New Combinations of Security Containers.

Security: Confidential

No: DL-378

Date: September 20, 1960

Enclosures:

Air or Surface Mail: Air

Post File No:

Ottawa File No.	
50048-AF-40	
33	50

References

Thank you for sending us your new security combinations which, although you quoted Circular Document Admin. 8/56 of February 20, 1956, were not reported in accordance with the provisions of that document. If you will refer to paragraph 7 of that document you will see that an envelope containing new combination settings should be marked "To be opened by the Departmental Security Officer only" and should, in addition, be clearly identified as the attachment to a numbered letter, the number and date of which should appear on the envelope. It should be classified "SECRET" and, in addition, should be sealed with wax on all seams at the back.

2. We hope that precautions outlined above will ~~also~~ be observed in future.

for Under-Secretary of State for External Affairs.

Internal Circulation

Distribution to Posts

Ext. 181B (Rev. 2/52)

Document disclosed under the *Access to Information Act*
Document divulgué en vertu de la *Loi sur l'accès à l'information*

D.L.(2)Division, W.M. Agnes/mr

FILE

Confidential

September 16, 1960.

3607-40
50048-AF-40

W.M. Agnes

Following the preparation of my letter to Bill Holmes, Permis New York, I ran a test on the shredder we have downstairs to establish the amount of Communications waste which could be destroyed in one hour.

2. The three bags of waste I obtained from Concentre contained tapes, carbons, continuous manifold paper with interleaved carbon, kleenex, empty cigarette packages, plastic sheets, bond and heavy brown wrapping paper. This material had been crumpled and most of the tapes were attached in bundles as usual.

3. The contents of the three bags in question weighed 9 pounds. The entire operation lasted 39 minutes including cleaning up to ensure that all material had been destroyed, that nothing was left on the floor or inside the cover of the machine or between the knives. This would work out at an average of approximately 13 to 14 pounds an hour.

4. I did not hurry particularly during the operation which was found at times rather frustrating since some material had to be uncrumpled and the bundles of tape had to be unravelled. The machine stopped four times but started again immediately after manipulating the switch to clear the jam. It was not necessary at any time to turn the motor by hand. No particular precautions were taken against overloading and the machine handled successfully bundles of tape which were quite thick.

5. After the test, the motor which had been running continuously for 39 minutes was very warm to the touch but not so warm as to cause me to remove my hand.

Defence Liaison (2) W.M. Agnes.

Document disclosed under the Access to Information Act
Document divulgué en vertu de la Loi sur l'accès à l'information

Latin American/D.W. Fulford/gd

DEPARTMENT OF EXTERNAL AFFAIRS

MEMORANDUM

TO: PROTOCOL DIVISION

FROM: LATIN AMERICAN DIVISION

REFERENCE:

SUBJECT: Regulations Governing Mounties Accompanying Prime Minister to New York

Security

Date September 26, 1960

File No. 50048-AF-40

33

The Permanent Mission in New York telephoned on September 24, when I was acting as Duty Officer, to inform the Department that the New York Police had no objection to two Mounties accompanying the Prime Minister, but said that they would not be allowed to carry revolvers. If they brought them with them, they would have to be left at Idlewild Airport.

2. Mr. Beaulne suggested that I send you a memorandum because this might have value as a precedent in the case of U.S. police officials entering Canada.

D.W. Fulford

Latin American Division

CIRCULATION

Ext. 326 (6/56)

Document disclosed under the Access to Information
Document divulgué en vertu de la *Loi sur l'accès à l'information*

DEPARTMENT OF EXTERNAL AFFAIRS, CANADA.

NUMBERED LETTER

TO: THE UNDER-SECRETARY OF STATE FOR EXTERNAL AFFAIRS, OTTAWA, CANADA.

FROM: THE PERMANENT MISSION OF CANADA TO THE UNITED NATIONS N.Y.

Reference: Circular Document 8/56

Subject: COMBINATIONS OF SECURITY CONTAINERS.

Security: SECRET

No: 605

Date: September 13, 1960.

Enclosures: 1

Air or Surface Mail: AIR

Post File No:

Ottawa File No.	
50048-AF-40	
21	50

References

D 2

1	
2	
3	
4	
5	
6	
7	
8	
9	
10	

SEP 1960

Internal Circulation

D

Distribution to Posts

In accordance with the above mentioned circular document you will find attached a list of the combinations of the security containers in this Mission with the exception of those in the Communications Section, which are forwarded separately.

Mr Sauve

Mr Bruce

File

Letter sent

J.H. Halstead
Permanent Mission

Ext. 182A (Rev. 2/52)

Document disclosed under the *Access to Information Act*
Document divulgué en vertu de la *Loi sur l'accès à l'information*

D.L.(2) Division/W.M. Acness/ad

DEPARTMENT OF EXTERNAL AFFAIRS

MEMORANDUM

TO: United Nations Division

FROM: Defence Liaison (2) Division

REFERENCE: Your memorandum of August 15, 1960

Security Confidential

Date August 19, 1960

File No. 50048-AF-40 "D"

57

Copy on 5475-DW-73-40 "U"

SUBJECT: Articles for the Commentary for the 15th Session of the General Assembly of the United Nations.

file

For part II

I attach, as requested, an amended article on "Security Arrangements for the Delegation".

2. I understand that you have already received from another section of this Division a memorandum dealing with the article on "Discussions with Soviet Officials".

Defence Liaison (2) Division.

CIRCULATION

Ext. 326 (6/56)

Document disclosed under the *Access to Information Act*
Document divulgué en vertu de la *Loi sur l'accès à l'information*

D.L.(2)Division/W.M.Agnes/af

DEPARTMENT OF EXTERNAL AFFAIRS

MEMORANDUM

TO: FILE

FROM: Defence Liaison(2)Division

REFERENCE:

Security

Date August 17, 1960.

File No. 50048-AF-40
cc: 50048-AF-40

SUBJECT: Destruction of classified waste: New York

I called Mr. Wright of Block & Anderson (Canada) Ltd., Ottawa, about an inquiry I made some time ago regarding the possibility of obtaining from that company an electric shredder of industrial type fitted with a one millimeter crosscut head for our Permanent Mission in New York. Mr. Wright told me that:

(a) head office in Montreal and the Ottawa branch were not interested in dealing with industrial type shredders.
(b) industrial type shredders could not be fitted with a one millimeter cutting head.

2. Mr. Wright told me that he was reasonably sure that the second point mentioned above was correct as it was Mr. Block himself on his return from a trip to Europe who had told him that it was not possible. Mr. Wright was inclined to think that we should not make any further inquiries in this respect.

CIRCULATION

W.M. Agnes

Ext. 326 (6/56)

Document disclosed under the *Access to Information Act*
Document divulgué en vertu de la *Loi sur l'accès à l'information*

DEPARTMENT OF EXTERNAL AFFAIRS

MEMORANDUM

Mr Agnew: pls deal

TO: Mr. J. K. Starnes, Mr Immerke

Head of Defence Liaison (2) Division

FROM: E. W. T. Gill

for action JS

JOHN STARNES 16 AUG 1960

REFERENCE:

Security S.E.C.R.E.T

Date August 15, 1960.

File No. 50048-AF-40

37 —

SUBJECT: Visit of the Liaison Team to the Permanent Mission, New York, 1960

The following excerpt from the Liaison Team report on the Permanent Mission in New York may be of interest to your Division:

"SECURITY ARRANGEMENTS

The three security guards appeared to have developed a satisfactory working relationship. Since they have all had considerable experience and consider themselves familiar with the duties required of them, they probably feel little need to consult together, and Mr. Logan and Mr. Elms may not think it necessary to look for much direction from Mr. Hammond. Mr. Elms, a fairly recent arrival from another post, was asked about the briefing given to him by Hammond when he took up his duties, but he was a bit vague in his reply. Hammond was, too, when he was asked the same question. The schedule of duties appeared to be satisfactory, although it was noted that the stretch from 5:30 in the evening until 9:30 the next morning is sixteen hours. None of the guards, however, expressed any interest in a shift arrangement because of the uncertainty of night transport facilities and the additional expense. When all three guards are on duty the Mission is given full coverage during the silent hours, including weekends and holidays. A spot check system is put into effect on weekends when only two guards are available for duty.

The local security orders were in course of preparation. Mr. Halstead, who looks after security matters, wished to give them closer scrutiny before submitting them to the Department for approval. Because it appeared to the Team that Mr. Halstead has so many other responsibilities at the Mission we suggested that one of the other officers might take over as security officer.

We discussed the question of equipping the doors to the various offices with security locks as suggested in Mr. Timmerman's report dated July 7, 1959. There was agreement in principle that this might be desirable, but we were told that the doors are so constructed that it would be difficult if not impossible to affix the locks without doing serious damage. It was also suggested that the cost might be prohibitive.

CIRCULATION

Ext. 326A (6/56)

16.8.35(US)

Document disclosed under the *Access to Information Act*
Document divulgué en vertu de la *Loi sur l'accès à l'information*

It was noted that the door leading to the security area is still kept open despite the recommendations of the Departmental Security Officer. The Team could see no real reason why this door should not be equipped with an electrically operated latch and buzzer system similar to that in use at certain other Missions. Admittedly, a locked door is an inconvenience to officers and registry personnel alike, but we believe that security considerations should be the determining factor and that an electrically operated system would provide the most efficient solution to the problem."

. . . . . .

E. W. T. Gill

Document disclosed under the *Access to Information Act*
Document divulgué en vertu de la *Loi sur l'accès à l'information*

DEPARTMENT OF EXTERNAL AFFAIRS, CANADA

OUTGOING MESSAGE

DATE	FILE	SECURITY
JUNE 30/60	50048-AF-40 ~~50048-AF-40~~ X0 ~~Personal folder~~	CONF

FM: EXTERNAL

NUMBER	PRECEDENCE	COMCENTRE USE ONLY
P-706		

TO: CANADIAN EMBASSY, LISBON

INFO: ANKARA

Ref.: URTEL 42 OF JUNE 30

Subject:

REGRET HAVING OVERLOOKED QUESTION OF EDUCATION FOR BROUGHAL'S ELDEST CHILD AND WE THEREFORE APPRECIATE REASONS FOR HIS REFUSAL OF CROSS POSTING TO ANKARA. HOWEVER WE ARE PLANNING A CROSS POSTING TO PERMIS NEW YORK APPROXIMATELY THE SAME DATE AND WE SHOULD THEREFORE BE GRATEFUL IF YOU WOULD PROCEED WITH PLANS FOR HIS DEPARTURE FOR CANADA IN EARLY SEPTEMBER AS SCHEDULED. IT WILL ALSO BE NECESSARY TO MAKE ARRANGEMENTS FOR SHIPMENT OF EFFECTS FROM LISBON TO NEW YORK.

LOCAL DISTRIBUTION

c.c. DL.(2)

NO STANDARD. LOCAL DONE BY DIVISION.

Finance Div.

ORIGINATOR	DIVISION	PHONE	APPROVED BY
SIG. ..... NAME E.H. Woodyard/mp	Personnel	2-2506	SIG. ..... NAME G.H. Blouin

EXT. 18 (REV. 12/56)

Document disclosed under the *Access to Information Act*
Document divulgué en vertu de la *Loi sur l'accès à l'information*

D.L.(2) Division/J.Timmerman/af

DEPARTMENT OF EXTERNAL AFFAIRS

MEMORANDUM

TO: FILE

FROM: J. Timmerman

REFERENCE:

Security: Confidential

Date: June 22, 1960.

File No. 50048-AF-40

SUBJECT: Security Arrangements - Nato New York.

I had a word with Derek Arnould who has returned from New York. So far as he was aware, nothing has yet been done to eliminate the weakness in the structure of the vaults. I said that I had written to John Halstead about this and a number of other matters. Mr. Arnould indicated that members of the mission were keeping in their possession front door keys to the day lock instead of handing these in to the security guard. This is undesirable so long as the night lock on the front door is not taken into use immediately the security guard comes on duty.

J. Timmerman

CIRCULATION

Ext. 326 (6/56)

Document disclosed under the *Access to Information Act*
Document divulgué en vertu de la *Loi sur l'accès à l'information*

D.L. (2)/W.M.Agnew/af

Inspection Service

Confidential

June 8, 1960

Defence Liaison(2)Division

50048-G-40
50048-AF-40

28

Inspection of our missions in Washington and Permis New York.

As agreed during the visit of Miss MacDougall to my office on June 7, 1960, this short memorandum and its attachments are intended to replace the brief which we normally prepare for your information on security matters outstanding at the various missions included in inspection trips.

2. Washington: I attach copy of our letter Ds-504 of May 30, 1960 in which we commented on several points raised by the mission in their standing security orders. In addition to these you may wish to look into the position of the local maintenance supervisor who occupies part of the basement of the Chancery.

3. On paper the generalSecurity of the Chancery appears to be satisfactory. We should be glad to have any views you might be able to form on the subject during your inspection:

4. A second Ottawa based security guard was recently posted to Washington. We would be particularly interested in your report on:

(a) the performance and behaviour of Mr. Horner(Security guard)
(b) the working relationship between the Ottawa-based security guards and the RCMP Special Constables.
(c) the eventual replacement by Ottawa based personnel of the locally engaged messengers at present employed on security duties.

5. The mission may raise the issue of the destruction of classified waste received by British truck from Permis New York. We are now negotiating the acquisition of suitable electric shredding machine for our mission in New York. This would relieve the staff in Washington of the additional duties they are now performing in this respect because of the lack of adequate facilities in New York.

6. Permanent Mission to United Nations, New York
Investigation into recent personnel difficulties brought to light a number of practices which are not consistent with good security. I attach for your information.

(a)copy of my report of July 8,1959 on which various points worthy of investigation on your part have been marked in red pencil. I might mention that no reply was received to the covering letter (DS-526 of July 8, 1959).

Document disclosed under the *Access to Information Act*
Document divulgué en vertu de la *Loi sur l'accès à l'information*

(b) Copy of my letter of April 20, 1960 to Mr. Halstead which you will find of interest particularly regarding point (b).
(c) copy of my letter of May 25, 1960 also to Mr. Halstead, of which the second paragraph bears directly on security practices(or the lack of them) at the mission.

7. As mentioned above, we are negotiating the purchase of an electric shredder of suitable out put to dispose of the missions classified waste which can neither be burned nor pulped.

8. We should be grateful for any observations and recommendations you might have to make following your inspection on:

(a) the performance and behaviour of the security guards, particularly as regards personal relationships between the senior guard(Mr.Hammond) and the two other guards.
(b) any aspect of the security of the mission which in your opinion could or should be improved.

Defence Liaison(2) Division.

Document disclosed under the *Access to Information Act*
Document divulgué en vertu de la *Loi sur l'accès à l'information*

D.L.(2)Division/W.M.Agnes/ar

file copy

3607-40
CC for 50048-AF-40

OTTAWA, June 3, 1960.

Block and Anderson (Canada) Ltd.,
382 Richmond Road,
O T T A W A.

Dear Sirs,

This will confirm your telephone conversations with our Mr. Agnes in which it was decided that you would enquire into the possibility of mounting a 1 mm. cutting head on an industrial type shredding machine. We should be grateful if you would arrange to discuss this matter with us as soon as the information you require is available.

Yours sincerely,

Under-Secretary of State
for External Affairs.

Document disclosed under the Access to Information Act
Document divulgué en vertu de la Loi sur l'accès à l'information

D.L.(2) Division/W.M. Agnew/af

DEPARTMENT OF EXTERNAL AFFAIRS, CANADA (DUPLICATE)

NUMBERED LETTER

To: [redacted]ne Canadian Embassy,
WASHINGTON, D.C.

From: THE UNDER-SECRETARY OF STATE FOR EXTERNAL AFFAIRS, OTTAWA, CANADA.

Reference: Your letter No. 769 of May 13, 1959

Subject: Duties and Employment of Security Guards.

Security: Confidential

No.: DS-504

Date: May 30, 1960

Enclosures:

Air or Surface Mail: Air

Post File No.:

Ottawa File No. 50048-G-40

References

Internal Circulation

Distribution to Posts

The posting of a second Ottawa based security guard gave us the occasion to review in some detail your local security orders and security guard schedules on which we regret not to have commented earlier. These orders were well prepared and appear to cover all important points adequately. However, there are several points on which we should like to comment.

2. Hours of Duty

First, we are of the opinion that a 16 hour shift for security guards is much too long. This type of schedule (which we must say has been proposed at a number of missions) may very well appeal to the guards as it enables them to enjoy long off-duty periods. However, this practice is not conducive to alertness and efficiency on the part of the guards and it should be resisted. Night or day shifts should therefore not be more than 8 or 9 hours at the most and, during the night, the guard on the first shift should be relieved at midnight or soon thereafter.

3. Cot and Radio

We are unable to support your suggestion that a cot and a radio be purchased for the guards. The cot might be justified if you had only a two guard detail covering the quiet hours. As for the radio, we could not recommend it as a necessary piece of equipment. As a matter of fact, we might point out that the use of radios and record playing machines by security guards on duty is at best tolerated. Although we appreciate that they are of assistance to the guards between rounds, they may also interfere seriously with the efficient discharge of their duties.

4. Time Clocks

In the past, it has not been the policy of the Department to use time clocks to ensure complete coverage at irregular intervals of premises placed under the surveillance of security guards. However, this question has been considered on several occasions and we agree that time clocks would be useful in large chanceries to ensure that the premises are adequately inspected. We should be grateful therefore if you would let us know:

(a) whether suitable time clocks are available in Washington and at what price.
(b) what would be the costs of installation.

5. Disposal of Classified Waste

All used carbon paper should be regarded as classified regardless of whether it was used to type classified material or not. Consequently, used carbon paper should be protected while in use a classified material and ultimately destroyed with the classified w to avoid any chance of mishap.

Document disclosed under the *Access to Information Act*
Document divulgué en vertu de la *Loi sur l'accès à l'information*

6. Keys.

Since the hours of the Ottawa based security guards and the RCMP constables are arranged to cover the full 24 hour period every day, it should not be necessary for any of the guards to have a key to the chancery. If it is felt that a key should be available for emergency purposes (i.e. should the guard on duty be taken ill while inside the locked chancery) you might consider leaving a key in a sealed envelope in the custody of the Joint Staff.

7. We should mention also that your orders do not indicate what control procedure is in effect to ensure the safe keeping of all security keys issued to personnel.

8. You may wish to review your orders and guard schedules on the occasion of the arrival of a new security guard and to let us have your comments at your convenience.

Under-Secretary of State
for External Affairs.

Document disclosed under the *Access to Information Act*
Document divulgué en vertu de la *Loi sur l'accès à l'information*

File 14/10

DEPARTMENT OF EXTERNAL AFFAIRS

MEMORANDUM

Mr Timmerman

TO: Defence Liaison (2) Division

Attention: Mr. Timmerman

FROM: Personnel Division

REFERENCE: Permis, New York Telegram 1461 of Sept. 16 & Your memorandum of October 7, 1960

Security CONFIDENTIAL

Date October 12, 1960

File No. S0048-AF-40

SUBJECT: Employment of Security Guard as Telephone Operator during United Nations General Assembly

We wish to inform you that Miss I. Spinelli, a Canada based Telephone Operator employed in Washington, was assigned to the United Nations General Assembly with effect from October 3. Miss Spinelli will remain in New York until the end of November.

2. In the circumstances, there should not be any need for employing Security Guards as Telephone Operators and the post has agreed to discontinue this unsatisfactory practice.

Personnel Division.

(1) Mr Ogilvie:

To see & file.

12/10.

(2) Good. What is Parker doing down there then? I'll look into this in N.Y.

CIRCULATION

Ext. 326 (6/56)

Document disclosed under the Access to Information Act
Document divulgué en vertu de la Loi sur l'accès à l'information

File A 25/5

PERSONAL & CONFIDENTIAL

S0048-AF 40
PS/EA/158/57.

Ottawa, May 25, 1960.

Dear John,

I am grateful for your prompt response of 4 May to my letter of 20 April concerning Leclerc. I am now in a position, in consultation with Personnel, to dispose of his case. He has given no sign of leaving and I have no reason to believe that the National Film Board are clamouring for his services.

sub-para.(b) of the first paragraph of your letter and the explanation given in paragraph 2 inspired me to review the security file on your post since I faintly recalled writing something about the dangers of leaving classified papers in unoccupied and unlocked offices following my visit in June last year. In consequence I must in sorrow draw your attention to our letter DS-396 of 8 July which does not seem to have been answered or acted upon in any way. Para. 6 (a) of the report attached to that letter I think you will find directly bears on the point discussed in your letter.

I should be very glad if you would now cause the report to be disinterred and acted upon as suggested.

Yours ever,

J. Timmerman.

J. G. H. Halstead, Esq.,
Permanent Mission of Canada
to the United Nations,
New York.

Document disclosed under the Access to Information Act
Document divulgué en vertu de la Loi sur l'accès à l'information

PERSONAL & CONFIDENTIAL

Elms file
~~Hammond file~~
50048-AF-40

DSS-209

Ottawa, May 16, 1960.

50048 AF	40
28	50

Dear John,

You may be relieved to know that I have carefully scanned the record, spoken to one or two people who should know, and have discovered nothing to substantiate your fears about Elms or to alter the views about him I expressed to you on the telephone. In my opinion he is a reliable, conscientious and dependable man, perhaps not the most intelligent in the service but one who should serve you well as a security guard.

Your letter confirmed my guess as to the source of your information. Hammond and Elms certainly were not buddies while they served together in Ottawa. That need not prevent Elms doing a good job as a guard at your post. Indeed it has been our experience that when guards get too chummy the quality of their work and thus the security of the post is likely to suffer. Logan's friend probably is Forrester. There was a minor clash between Forrester and Elms in Belgrade. Although this petty incident reflected no great credit on either, it does not change my assessment of Elms.

As you are aware, we are not in a position to give you anyone in place of Elms. All five guards now in Ottawa are, for one reason or other, unpostable. The only alternative would be to effect a switch between posts. The expense would be hard to justify.

In the circumstances you may wish to have a talk with Hammond and inform him that since there is no possibility of anyone but Elms being sent to New York, you must ask him to give Elms a fair run despite any personal differences and make the bdst of it. You may also wish to point out that a failure on

. . . 2

J. G. H. Halstead, Esq.,
Permanent Mission of Canada
to the United Nations,
New York.

Document disclosed under the *Access to Information Act*
Document divulgué en vertu de la *Loi sur l'accès à l'information*

Hammond's part to get along with Elms resulting in a loss of efficiency might well reflect on his competence to fill the position of senior guard and to get the best out of the men under his supervision.

My prayers are with you.

Yours ever,

J. Timmerman.

Document disclosed under the *Access to Information Act*
Document divulgué en vertu de la *Loi sur l'accès à l'information*

DEPARTMENT OF EXTERNAL AFFAIRS

CROSS REFERENCE SHEET

Security CONFIDENTIAL

50048-AF-40		
KO	—	

Type of Document Letter **No.** - **Date** May 10, 1960

From J.Timmerman, D.L.(2), Ottawa

To J.G.H.Halstead, PERMIS New York

Subject: re provision of extra guards, telephone operators or messengers to tend the switchboard at the Delegation to the U.N. Assembly at New York during Assembly time.

Original on File No. 50048-CA-40

Copies on File No. -

Other Cross Reference Sheets on -

Prepared by J. Liebler

Ext. 308

Document disclosed under the *Access to Information Act*
Document divulgué en vertu de la *Loi sur l'accès à l'information*

PERMANENT MISSION OF CANADA TO THE UNITED NATIONS
MISSION PERMANENTE DU CANADA AUPRÈS DES NATIONS UNIES

750 Third Avenue,
New York 17, New York.

PERSONAL AND
CONFIDENTIAL

May 5, 1960.

File
50048-AF-1/40
28 | 52
2/5

Dear John:

In our telephone conversation today you asked me to drop you a line about Elms, the security guard who has been named to succeed Leclerc.

What I have heard about Elms comes from two sources: the two guards who are here now. Hammond has told me that he worked with Elms in Ottawa some time ago and was not impressed with his intelligence, to say the least. Logan has told me, in reply to my questions, that he understood that Hammond and Elms had not got along at all well together. More important perhaps, he said that he had heard from a good friend of his, who was a guard in Belgrade when Elms was there, that they were very relieved to get rid of him when he left.

As I said on the telephone, I have no real basis on which to evaluate these reports, except that I have found Logan to be pretty objective and level-headed in the past. There is perhaps sufficient grounds here, however, to have another look at Elms' background, and I should be grateful if you could let me know in due course what you turn up.

Yours sincerely,

John

J. G. ~~H.~~ Halstead,
Counsellor.

Mr. J. Timmerman,
Defence Liaison (2) Division,
Department of External Affairs,
247 East Block,
Ottawa, Ontario.

Document disclosed under the Access to Information Act
Document divulgué en vertu de la Loi sur l'accès à l'information

DEPARTMENT OF EXTERNAL AFFAIRS, CANADA

OUTGOING MESSAGE

File
5/5/60

DATE	FILE	SECURITY
APR29/60	50048-AF-40 Personal folder.	UNCLAS

FM: EXTERNAL

NUMBER	PRECEDENCE	COMCENTRE USE ONLY	
P-432	PRIORITY		

TO: PERMIS NEW YORK

INFO:

Ref.: URTEL 512 APR25/60

Subject:

REPLACEMENT FOR LECLERC, C.E.ELMS, SECURITY GUARD I IS AT PRESENT ON TEMPORARY DUTY ISTANBUL. PRESENT PLANS CALL FOR HIS ARRIVAL IN NEW YORK AROUND MID-MAY. WE SHALL INFORM YOU OF EXACT TIME AND DATE OF ARRIVAL AS SOON AS ARRANGEMENTS COMPLETED. ELMS IS MARRIED, NO CHILDREN.

LOCAL DISTRIBUTION

NO STANDARD - LOCAL DONE BY DIVISION: FINANCE DIVISION
DEFENCE LIAISON (2) DIVISION

ORIGINATOR	DIVISION	PHONE	APPROVED BY
SIG. ..... NAME E.H.WOODYARD/gc	PERSONNEL	22506	SIG. J. CLARK NAME

EXT.18(REV.12/56)

Document disclosed under the *Access to Information Act*
Document divulgué en vertu de la *Loi sur l'accès à l'information*

DEPARTMENT OF EXTERNAL AFFAIRS, CANADA.

NUMBERED LETTER

Security: SECRET

No: 296

Date: April 27, 1960

Enclosures: 1

Air or Surface Mail:

Post File No:

Ottawa File No. 50048-AF-40

58 | 50

TO: THE UNDER-SECRETARY OF STATE FOR EXTERNAL AFFAIRS, OTTAWA, CANADA.

FROM: The Permanent Mission of Canada to the United Nations, New York.

Reference: Circular Document 8/56

Subject: Combinations of Security Containers

References

D-2
1
2
3
4
5
6
7
8
9
10
11
28 APR 1960

Internal Circulation

D

Distribution to Posts

D-2 P

In accordance with the above-mentioned circular document, I attach a list of the combinations of the Permanent Mission security containers. The combinations for the Communications Section containers have been forwarded to you separately.

Mr. ~~Jamet~~ Wright and file

28/4/60

J. H. Halstead
Permanent Mission

Ext. 182A (Rev. 2/52)

Document disclosed under the *Access to Information Act*
Document divulgué en vertu de la *Loi sur l'accès à l'information*

D.L.(2)/J.Timmerman/rjt

PERSONAL & CONFIDENTIAL

50048-AF-40

PS/EA/158/57
PS/EA/87/57
50048-AF-40

Ottawa, April 20, 1960.

Dear

I have been asked by John Starnes (who is away with the flu) to thank you for your letter of 7 April concerning Leclerc and to obtain from you some further information on two points of interest to us. I should be grateful, therefore, if you would drop me a note when you have a moment informing me:

(a) where and when the photostat of the letter was made;

(b) whether it remains customary for the guards to put away baskets and lock up security containers in individual offices at your post.

If the answer to the latter is in the affirmative, I suggest that you should seriously consider relieving guards of this responsibility which, in our view, opens the door to all sorts of undesirable possibilities in addition to the particular one with which we are concerned.

We are inclined to agree that Fairhurst was prompted by nothing more than a desire to advise and help Leclerc. We trust that the reprimand you have given him will have the desired effect. We shall, of course, be having a talk with Leclerc on his return. Our present feelings are that he has not much of a future in the Department and that he may well be better off to seek employment elsewhere.

Yours sincerely,

J. Timmerman.

J.G.H.Halstead, Esq.,
Permanent Mission of Canada
to the United Nations,
New York.

Document disclosed under the *Access to Information Act*
Document divulgué en vertu de la *Loi sur l'accès à l'information*

OUTGOING MESSAGE

1244/60

DATE	FILE	SECURITY
APR. 7/60	5048-AF-40	CONFIDENTIAL

FM: EXTERNAL, OTTAWA

NUMBER	PRECEDENCE	COMCENTRE USE ONLY
F-345	ROUTINE	

TO: PERMIS, GENEVA

INFO: ANKARA

Ref.:

Subject:

WE PROPOSE TRANSFERRING C.E. ELMS TO ANKARA ON APRIL 30 FOR TEMPORARY DUTY DURING MINISTERIAL CONFERENCE. PLEASE ARRANGE AIR TRAVEL GENEVA - ANKARA - OTTAWA AND CONFIRM. ELMS HOLDING OPEN RETURN TICKET WHICH MAY BE USED FOR CREDIT PURPOSES. PLEASE ENSURE THAT HE RETURNS ECONOMY CLASS FROM POINT OF CONNECTION IN EUROPE. WE SHOULD ALSO BE GRATEFUL IF YOU WOULD INFORM ELMS THAT HE IS SCHEDULED FOR POSTING TO PERMIS NEW YORK FOR FULL TOUR OF DUTY AROUND MID-MAY.

LOCAL DISTRIBUTION "NO STANDARD" - Local done by Division

D.L. (2)
Admin. Services
Finance Div.

ORIGINATOR	DIVISION	PHONE	APPROVED BY
SIG. E.H. Woodyard/jp NAME	PERSONNEL	2-2506	M. GAUVREAU SIG. M. GAUVREAU NAME

Document disclosed under the *Access to Information Act*
Document divulgué en vertu de la *Loi sur l'accès à l'information*

DEPARTMENT OF EXTERNAL AFFAIRS, CANADA.

NUMBERED LETTER

TO: THE UNDER-SECRETARY OF STATE FOR EXTERNAL AFFAIRS, OTTAWA, CANADA.

FROM: The Permanent Mission of Canada to the United Nations, NEW YORK

Reference:

Subject: Combinations of Security Containers

Security: SECRET

No: 196

Date: March 18, 1960

Enclosures: 1

Air or Surface Mail: Air

Post File No:

Ottawa File No. 50048-AF-40

58 | 50

References

—

D-2

1
2
3
4
5
6
7
8
9
10
11

MAR 1960

We attach, in accordance with the above mentioned Circular Document, the sealed envelope containing the combinations for the security containers in the Communications Section of the Mission.

G H Halstead
Permanent Mission

Mr. Jacine to note and file

24/3/60

ternal
lation

D

ibution
Posts

2A (Rev. 2/52)

Document disclosed under the Freedom of Information Act
Document divulgué en vertu de la *Loi sur l'accès à l'information*

1990 MAR 24 AM 11 : 21

Document disclosed under the *Access to Information Act*
Document divulgué en vertu de la *Loi sur l'accès à l'information*

D.L.(2)Division/EKeyes/mlc

50048-AF-40
28

OTTAWA, January 18, 1960

Mosler-Taylor Safe Co. Ltd.,
Brampton, Ont.

Dear Sirs:

We have been informed by our Mission in New York that their Taylor special safe has a small cavity, 3/8" deep, in the mantle midway along the right side at the top.

Presumably the cavity was caused by an acid reaction in the fire-resistive material. We have noticed similar eruptions on other of our special safes especially those that have been in use for some years. The safe in question, however, (serial number 109678) was repaired by you in September, 1959 and we understand that a new mantle was fitted at that time.

We are aware, of course, that the cavity in the top of the safe does not affect the security of the unit. However, we would like to arrest its development before it becomes more serious. We should be grateful, therefore, if you would advise us how best to deal with this problem.

Yours very truly,

for Under-Secretary of State
for External Affairs

Document disclosed under the *Access to Information Act*
Document divulgué en vertu de la *Loi sur l'accès à l'information*

DEPARTMENT OF EXTERNAL AFFAIRS, CANADA.

13/1/60

NUMBERED LETTER

TO: THE UNDER-SECRETARY OF STATE FOR EXTERNAL AFFAIRS, OTTAWA, CANADA.

FROM: The Permanent Mission of Canada to the United Nations, New York.

Reference: Circular Document 8/56

Subject: Combinations of Security Containers.

Security: SECRET

No: 11

Date: January 8, 1960

Enclosures: 1

Air or Surface Mail:

Post File No:

Ottawa File No. 50048-AF-60

28 | 56

References

D-V

In accordance with the above-mentioned circular document, I attach a list of the combinations of the Permanent Mission security containers. The combinations for the Communications Section containers have been forwarded to you separately.

Mr. Reid to note and file please
MM 12/1/60

noted 13/1/60

J. H. Halstead
Permanent Mission

Internal Circulation

D

Distribution to Posts

Ext. 182A (Rev. 2/52)

Document disclosed under the *Access to Information Act*
Document divulgué en vertu de la *Loi sur l'accès à l'information*

1960 JAN 12 AM 11:08

Document disclosed under the *Access to Information Act*
Document divulgué en vertu de la *Loi sur l'accès à l'information*

File 28/12/59

DEPARTMENT OF EXTERNAL AFFAIRS, CANADA.

NUMBERED LETTER

TO: THE UNDER-SECRETARY OF STATE FOR EXTERNAL AFFAIRS, OTTAWA, CANADA.

FROM: THE PERMANENT MISSION OF CANADA TO THE UNITED NATIONS

Reference: Our letter 686 of September 16, 1959

Subject: COMBINATIONS OF SECURITY CONTAINERS

Security: SECRET

No: 808

Date: December 23, 1959.

Enclosures: 1

Air or Surface Mail: Air

Post File No:

Ottawa File No.	
50048-AF-4	
28	58

9-25

References

D-2

1
2
3
4
5
6
7
8
9
10
11

24 DEC 1959

The combinations of the security containers in the Communications Section of this Mission have recently been changed. The new combinations are listed in the enclosed envelope.

noted 28/12/59

Mr. Reid

Internal Circulation

D

J. H. Halstead
Permanent Mission

ition
its

(Rev. 2/52)

Document disclosed under the *Access to Information Act*
Document divulgué en vertu de la *Loi sur l'accès à l'information*

Document disclosed under the *Access to Information Act*
Document divulgué en vertu de la *Loi sur l'accès à l'information*

DEPARTMENT OF EXTERNAL AFFAIRS, CANADA.

NUMBERED LETTER

TO: The Permanent Mission of Canada to the United Nations, New York NY, U.S.A.

FROM: THE UNDER-SECRETARY OF STATE FOR EXTERNAL AFFAIRS, OTTAWA, CANADA.

Reference: Our letter of May 8 1959 and August 20 1959 Circular Document No. A.74/51 of October 19, 1951

Subject: Reading of Security Regulations

Security: CONFIDENTIAL

No: DS-635

Date: November 20, 1959

Enclosures:

Air or Surface Mail: Air

Post File No:

Ottawa File No.

50048-AE-40

58 58

References

Internal Circulation

Distribution to Posts

Paragraph 7 of the Circular Document under reference provides that Canada-based personnel serving at missions abroad must read the Departmental Security Regulations twice a year. Circular Document No. B.51/55 of September 27, 1955 reminded posts abroad that the previous instructions were still in force although occasionally forgotten or disregarded.

2. Our records indicate that you have not complied with these instructions. It is essential that all members of the Department be thoroughly familiar with the security regulations and any other security orders in force at your post. Please arrange for all Canada-based personnel at your post to read this material and inform the Department when this has been done.

for the Under-Secretary of State
for External Affairs

Ext. 181B (Rev. 2/52)

Document disclosed under the *Access to Information Act*
Document divulgué en vertu de la *Loi sur l'accès à l'information*

FILE COPY

Defence Liaison (2)/W. M. Agnew/rjt

DEPARTMENT OF EXTERNAL AFFAIRS

MEMORANDUM

TO: Supplies & Properties Division

FROM: Defence Liaison (2) Division

REFERENCE: Your memorandum of October 28, 1959

SUBJECT: Visit to Canadian Missions in Latin America

Security: RESTRICTED

Date: November 2, 1959

File No. 11150-1-40
50048-R-40 50048-C-4
50048-M-40 50048-[illegible]
50048-AR-40 50048-B-4
50048-BC-40 50048-BA-[illegible]
50048-BW-40 50048-N-4[illegible]
50048-AF-40

Thank you for your offer to look into questions of interest to our division during your forthcoming visit to Latin America. We would not wish to burden you with detailed security questions but we should like to draw your attention in a general way to a problem which is common to all our missions in Latin America and which has serious security implications. It concerns the type of accommodation in which our chanceries are housed. As you know we have many reasons to be dissatisfied with the physical security of these chanceries, mostly because they are located in office buildings over which we have little or no control and where our offices are open to penetration from adjacent premises. We should be grateful therefore if, where changes might be recommended or contemplated, you would impress upon the Head of Post the desirability of locating our chanceries on island sites. In effect, in the choice of a new chancery, the requisites of good physical security should at least rank on a par with such other factors as location (in or near the fashionable district or business area) and suitability, etc., even at the expense of some convenience.

2. Although we have no specific problem you might investigate for us at this time, we should appreciate it if you would keep us informed of any problem of interest to us which you might encounter during your trip. Your report and advice would be gratefully received.

J. TIMMERMAN

Defence Liaison (2) Division.

CIRCULATION

Ext. 326 (6/56)

Document disclosed under the *Access to Information Act*
Document divulgué en vertu de la *Loi sur l'accès à l'information*

File 5-1-10
16/9

Mr Reyes to see & check on progress in about a week.

Ottawa, August 31, 1959

File: 50048-A.F.-40

50048-AF-40
28 1

31/8.

Mosler-Taylor Sales Ltd.,
36-38 Front Street East,
Toronto, Ontario.

Attention: Mr. Federico

Dear Sir:

As mentioned in our telephone conversation of August 27 we are sorely in need of one of the Taylor 221 safes sent to you this spring for complete reconditioning.

Would you please ship one of these safes, as soon as possible, Via Smith Transport, prepaid to:

Permanent Mission of Canada to the
United Nations,
750 Third Avenue,
New York City, N.Y.,
U.S.A.

This safe should be securely crated and packed for export. Careful attention to be given to the protection of the dials and door handle.

When shipment is made please forward Via registered mail an original copy of the Smith Transport freight bill, together with an invoice showing the approximate value of this safe, to the Permanent Mission at the above address. The serial No. model No. and combination settings should be mailed to "Defence Liaison (2) Division, Dept. of External Affairs, East Block, Ottawa.

Document disclosed under the *Access to Information Act*
Document divulgué en vertu de la *Loi sur l'accès à l'information*

Supplies & Properties Div./H.A.Hunter/sh.

Please forward your invoice in triplicate to Supplies & Properties Division showing the cost of repairs, export crating, prepaid freight supported by a certified copy of the paid freight charges.

Yours truly,

ORIGINAL SIGNED BY
H. A. HUNTER

Purchasing Agent.
External Affairs.

Document disclosed under the *Access to Information Act*
Document divulgué en vertu de la *Loi sur l'accès à l'information*

Telephones:
BRAMPTON GL 1-3240
TORONTO BU 6-3201

File 9.A
25/9

Mosler-Taylor Safes Ltd.

Brampton, Canada

Mr Timmerman

500 fs-AF-to
26 | L

September 23, 1959.

The Undersecretary of State for External Affairs,
Department of External Affairs,
Ottawa, Ontario.

Gentlemen: Attention Mr. Wright

This will confirm our telephone conversation of today in which we advised you that we will definitely ship your No. 221 special safe tomorrow, September 24th.

This will be addressed to
Permanent Mission of Canada
to the United Nations,
750 Third Avenue,
New York City, N.Y.
U.S.A.

Freight charges will be prepaid and invoiced to you as instructed in your letter of August 31st.

The serial number of the safe is 109678.

The combination numbers are:
Upper Lock 36-57-43-76
Lower Lock 41-59-64-83

Combination instructions are enclosed.

Yours truly,

Mosler-Taylor Safes Ltd.,

T. McKendrick

T. McKendrick.

TM:HJ

ENCLOSURE

R-M.T.I

Document disclosed under the *Access to Information Act*
Document divulgué en vertu de la *Loi sur l'accès à l'information*

1959 SEP 24 AM 10:18

Document disclosed under the Access to Information Act
Document divulgué en vertu de la Loi sur l'accès à l'information

DEPARTMENT OF EXTERNAL AFFAIRS, CANADA.

NUMBERED LETTER

21/9/59

TO: THE UNDER-SECRETARY OF STATE FOR EXTERNAL AFFAIRS, OTTAWA, CANADA.

FROM: Permanent Mission of Canada to the United Nations, New York.

Reference: Circular Document Admin. 8/56, our Letter 527 of July 3, 1959

Subject: Combinations of Security Containers

Security: SECRET

No: 686

Date: September 16, 1959

Enclosures: 1

Air or Surface Mail: Air

Post File No:

Ottawa File No. 30048-AF-40

58 | 50

References

D-2

1
2
3
4
5
6
7
8
9
10
11

21 SEP 1959

I attach a list of the combinations of the security containers of the Communications Section of the Permanent Mission.

G H Halstead
Permanent Mission

noted 21/9/59

Internal Circulation

D

Distribution to Posts

Ext. 182A (Rev. 2/52)

Document disclosed under the *Access to Information Act*
Document divulgué en vertu de la *Loi sur l'accès à l'information*

Defence Liaison (2)/F. E. Keyes/rjt

DEPARTMENT OF EXTERNAL AFFAIRS

MEMORANDUM

File 5/2 1619

TO: Supplies & Properties Division

Mr Hunter Recd 28/8 pm.

FROM: Defence Liaison (2) Division

REFERENCE:

Security S.E.C.R.E.T.

Date August 26, 1959

File No. 50048-AF-40

28

SUBJECT: Security Arrangements - United Nations General Assembly, New York

SUPPLIES AND PROPERTIES
FOR FILE
ACTION TAKEN
TELEGRAM
LETTER ✓
ORDERED
BY:
DATE 31/8/59

The United Nations General Assembly will be meeting in New York on September 15, 1959, and will require a Taylor Special safe for their own use.

2. We should be grateful, therefore, if arrangements could be made with the Taylor people to have repairs rushed through on one of our two safes now at their factory, and the unit shipped direct to New York.

Defence Liaison (2) Division

CIRCULATION

Ext. 326 (6/56)

Document disclosed under the Access to Information Act
Document divulgué en vertu de la Loi sur l'accès à l'information

File 1/9/59

DEPARTMENT OF EXTERNAL AFFAIRS, CANADA.

NUMBERED LETTER

TO: THE UNDER-SECRETARY OF STATE FOR EXTERNAL AFFAIRS, OTTAWA, CANADA.

FROM: Permanent Mission of Canada to the United Nations, New York.

Reference: Admin. Circular 8/56

Subject: Changing of Security Combination Settings.

Security: SECRET

No: 649

Date: 26 August 1959

Enclosures: one

Air or Surface Mail: courier

Post File No:

Ottawa File No. 50048-AF-40

58 | 50

J 23

References

D-2

1
2
3
4
5
6
7
8
9
10
11

AUG 1959

Internal Circulation

D

Distribution to Posts

In accordance with the above mentioned circular we are attaching a sealed envelope containing combinations for the Mission security locks, with the exception of those in the Communications section.

2. As recommended in paragraph 7(A) of the Report of the Departmental Security Officer attached to your letter DS-396 of July 8, the combinations for the security locks in the Communications section are changed separately and a separate list is sent to you. The Communications branch combinations were changed recently and a letter containing the combinations was sent to you under cover of our letter 527 of July 3.

noted 1/9/59

Mr. Reid to note and file

J. H. Halstead

Permanent Mission.

Cmy 1/9

Ext. 182A (Rev. 2/52)

Document disclosed under the *Access to Information Act*
Document divulgué en vertu de la *Loi sur l'accès à l'information*

1959 AUG 31 AM 11:25

Document disclosed under the *Access to Information Act*
Document divulgué en vertu de la *Loi sur l'accès à l'information*

DEPARTMENT OF EXTERNAL AFFAIRS, CANADA.

NUMBERED LETTER

TO: Permanent Mission to the United Nations
New York, N.Y., U.S.A.

FROM: THE UNDER-SECRETARY OF STATE FOR EXTERNAL AFFAIRS, OTTAWA, CANADA.

Reference: Our letter DS-307 of 8 May 1959 and Circular Document No. A.74/51 of October 19, 1951

Subject: Reading of Security Regulations

Security: CONFIDENTIAL

No: DS-516

Date: August 20, 1959

Enclosures:

Air or Surface Mail: Air

Post File No:

Ottawa File No. 5004-AF-40

~~5004-AF-40~~

70 | 58

References

Internal Circulation

Distribution to Posts

Paragraph 7 of the Circular Document under reference provides that Canada-based personnel serving at missions abroad must read the Departmental Security Regulations twice a year. Circular Document No. B.51/55 of September 27, 1955 reminded posts abroad that the previous instructions were still in force although occasionally forgotten or disregarded.

2. Our records indicate that you have not complied with these instructions. It is essential that all members of the Department be thoroughly familiar with the security regulations and any other security orders in force at your post. Please arrange for all Canada-based personnel at your post to read this material and inform the Department when this has been done.

for the Under-Secretary of State
for External Affairs

Ext. 181B (Rev. 2/52)

Document disclosed under the Access to Information Act
Document divulgué en vertu de la Loi sur l'accès à l'information

File in 6020-1-40 01/8833

REQUISITION FOR SUPPLIES

Le [redacted] no.

To: Supplies and Properties Division,
Dept. of External Affairs,
Ottawa, Canada

From Perm Miss. New York
Extract

Requisition No. 2 June 24 1959

Item No.	Catalogue Number	Quantity Required	Description of Goods	Quantity in Stock at Post.	Action Taken	Item Filled
		2	Cases Brown Leather one lock			
			~~Satchel type~~			
			Case # 305 supplied			
			2/Keys. S.K.			
			24/7/59			

This Space for use in Ottawa only

NOTE: Requisitions must be submitted in Duplicate
(Original—White, Duplicate—Blue)

Please use the Catalogue of Stationery and Office Supplies as a guide when preparing requisitions.

For Head of Post.

EXT. 189 (REV. 7/53)

Document disclosed under the *Access to Information Act*
Document divulgué en vertu de la *Loi sur l'accès à l'information*

50048-AF-40
20

File

CONFIDENTIAL

Ottawa, July 24 1959

FROM: THE DEPARTMENT OF EXTERNAL AFFAIRS, CANADA

TO: ~~THE CONSULATE GENERAL OF CANADA~~, NEW YORK, N.Y. U.S.A.
THE PERMANENT MISSION

We are forwarding by (best way 107 **) the following:-** July 24

1 (one) Deparmental Despatch Case (Brown) NO.305.

The key is being forwarded to you under a separate cover.

When the above has been received and checked, would you kindly sign and return the original form Ext. 27 R.

J. E. Keyes
Under-Secretary of State for External Affairs

~~Att. WS Reid BL(2) Room 251 East Block.~~

This is to certify that the above mentioned items have been received in good order.

M. N. — **Place**
July 28/59 — **Date**
Robert D. Fraser — **Signature**

Ext. 27 R (Rev. 2/53)

Document disclosed under the *Access to Information Act*
Document divulgué en vertu de la *Loi sur l'accès à l'information*

D.I.(2)/J.Timmerman/fjt

DEPARTMENT OF EXTERNAL AFFAIRS, CANADA. *(FILE COPY)*

NUMBERED LETTER

TO: The Permanent Mission of Canada to the United Nations, New York

FROM: THE UNDER-SECRETARY OF STATE FOR EXTERNAL AFFAIRS, OTTAWA, CANADA.

Reference:

Subject: Security Arrangements

Security: S.E.C.R.E.T.

No: DS-396

Date: July 8, 1959

Enclosures: 2

Air or Surface Mail: Air

Post File No:

Ottawa File No.	
50048-AF-40	
20	50

References

Attached is a copy of a report submitted by the Departmental Security Officer following his recent visit to New York. We hope you will find this report helpful in completing the security arrangements for your new offices.

2. Also attached is a copy of a paper prepared in the Department as a guide to posts in the compilation of local security orders (c.f. para. 5 of the Departmental Security Officer's report).

3. We assume that you will find acceptable and wish to implement as soon as may be the recommendations made in the attached report. Authority for any necessary expenditure of funds should, of course, be obtained from the Department as required by regulations in the normal way.

4. We should be grateful to be kept informed on progress or to have your comments, as the case may be.

Internal Circulation

John Starnes

Under-Secretary of State
for External Affairs.

Distribution to Posts

Ext. 181B (Rev. 2/52)

Document disclosed under the Access to Information Act
Document divulgué en vertu de la Loi sur l'accès à l'information

SECRET

July 7, 1959.

Report on Security Inspection by the
Departmental Security Officer
-
Permanent Mission of Canada to the United Nations,
New York
29 June - 1 July 1959

- - - - - - - - - - - - - - - - -

GENERAL

1. A move to new quarters involves a good deal more than the mere physical transfer of staff, furniture and facilities from one building to another. Among other things it provides opportunities for effecting improvements in organization and general layout of offices, raising the standard of physical security, reviewing and amending existing procedures and disposing of dead and dormant material accumulating over the years.

2. Since, however, the day-to-day work of a mission must continue uninterrupted before, during and following the period of dislocation connected with a move the opportunities mentioned above may not always be exploited as fully or effectively as the head of mission or his officers would like. In the case of PERMIS New York the mission seems to have made the most of the opportunities afforded by the move although the work involved in exploiting these opportunities has not in every case been completed. It is evident for example that a good deal of thought was given to the security arrangements and procedures for the new offices and that much progress has been made towards setting up basically sound security practices in the new offices. However, due to pressure of other work, both operational and administrative, there has been insufficient time to devise and commit to paper in digestible form for the instruction and guidance of the whole staff a comprehensive and detailed system of security. This inspection, therefore, came at a particularly opportune time and it is hoped that this report will in consequence prove helpful to the mission in completing its security arrangements.

3. During the course of my inspection all members of the staff proved most cooperative, frank and helpful. Their observance of department and local security arrangements insofar as they were familiar with them was good.

LOCAL SECURITY ORDERS

4. Security guards were working mainly to the specimen order supplied from Ottawa. The mission recognizes that this is unsatisfactory and are preparing post standing security guard orders. It is important that this work proceed without delay. Some suggested points for inclusion in these orders, to meet peculiar local requirements and to adjust the position where guards are not working in accord with the specimen orders sent from Ottawa, are set out individually below.

5. No copy of the specimen post standing security orders prepared by the Department some time ago for the guidance of posts abroad seems to have been sent to this mission. This omission is being rectified. Particular points for inclusion in those orders also are set out below.

. . . 2

Document disclosed under the *Access to Information Act*
Document divulgué en vertu de la *Loi sur l'accès à l'information*

PHYSICAL SECURITY ARRANGEMENTS

6. The existing physical security arrangements are basically sound. However, the following defects or weaknesses were discovered and should, it is suggested, be remedied:

(a) Security of individual offices

Since all visitors are in theory escorted from the reception area to the office of the person they have come to see and at the conclusion of their business are escorted back to the reception area, it was decided by the post that office doors should not be equipped with security locks (048 Yale spring latch). This means that highly sensitive papers with limited circulation on which officers are working in their offices must be placed in a locked security container each time the officer concerned is required temporarily to leave his office. The lack of such locks also makes difficult if not impossible the effective supervision of cleaners by the security guard. It is recommended therefore that all offices be equipped with 048 Yale spring latch locks.

(b) Control of security zone

The corridor door leading to the security zone (registry and communications area) is now fitted with a Yale dead latch lock. This lock at the moment serves no useful purpose. It is recommended that it be replaced by a 048 Yale spring latch so that this door may be kept locked without too much inconvenience to the staff during office hours. There would appear to be a particular need for this precaution during the period of the General Assembly when traffic is particularly heavy.

(c) Use of night lock on main entrance

I was given to understand that the night lock on the main entrance is not normally put to use until late at night, i.e. after all cleaners have left. It is recommended that the night lock be used commencing at 1900 hours each working day, over weekends and otherwise in the quiet hours whenever the security guard is required to leave the reception room.

(d) Registry

The lock on the day gate of the vault door is defective in that it can be opened by exerting pressure through the bars on the spring latch on the inside of the door with the aid of a piece of wire, ruler or some similar implement. It is suggested that the manufacturer be requested either to fit a protective plate on the door or to replace the lock with one operated by a key onboth sides.

(e) Communications Area

(i) The day gate lock on the communications room vault door should be modified in the same way as that of the registry door.

(ii) The hatch in the corridor wall of the communications line room is now protected merely by a plywood panel held by a cheap spring catch. In contrast the door next to it is a solid door equipped with a Yale jimmy-resisting dead-bolt lock. It is recommended that the hatch be equipped with bars or a grill, thus making it as difficult to enter the line room by way of the hatch as through the locked door.

. . . 3

Document disclosed under the *Access to Information Act*
Document divulgué en vertu de la *Loi sur l'accès à l'information*

SECURITY AND CHANGING OF COMBINATION SETTINGS

7. (a) The existing arrangement is that communications change their own settings and forward these in a separate sealed envelope to the Department with a local record being kept in a second sealed envelope stored in the Taylor safe in the registry. This procedure should be continued.

(b) The security guard should inspect the communications room in the course of his normal rounds through the slot in the wall between the communications room and the registry. Lights can be switched on and off from the circuit breaker box in the line room. If required a mirror should be mounted in the far corner of the communications room to give the guard a view of the whole room.

(c) Other combinations are changed by the security guard during the quiet hours. This precludes combinations being checked by a second person as required by Circular Document Admin. No. 8/56 of February 20, 1956. I gained the impression that in other respects also the provisions of this Circular Document were not being observed as faithfully as might be desired. This gives cause for concern, particularly with regard to the changing of the combination of the Taylor safe, since any departure from these instructions may well result in a most expensive and inconvenient lockout. It is recommended, therefore, that a system be devised and promulgated in local orders which will cause combinations to be changed regularly every three months in strict accordance with the procedures approved by the Department.

(d) A number of the staff were found to have in their possession a written record, in some cases in clear, of the combination settings to security containers. It is urged that action be taken immediately to bring to their attention the provisions of Circular Document Admin. No. 40/58. It would be desirable also to reproduce in standing post security orders the highlights of that Admin. Circular as a perpetual reminder of the important requirements it contains.

USE OF TAYLOR SAFE

8. (a) The Taylor safe is not being put to its proper use. One Time cypher pads and basic book are stored in the communications section rather than the Taylor safe in the registry. This means, of course, that if a lock-out involving the communications section vault door occurred the mission would be out of communication with the Department.

(b) It was also found that top secret correspondence was being placed on regular files and stored in most instances in bar and hasp cabinets. It is appreciated that the reorganization of the mission's files has not yet been completed and that the bar and hasp cabinets are protected by the vault type registry in which they are located. Nevertheless it is considered that top secret material should be given the best available protection, i.e. that provided by the Taylor safe.

(c) It is recommended that book cypher and other top secret material be stored in the Taylor safe in the Registry.

SECURITY CONTAINER FOR USE OF SECURITY GUARD

9. It is undesirable that security guards should have the combination of the Taylor safe or, for that matter, a permanent record of other combination settings which they have no real need to know. Guards should therefore be provided with a security container, located in their office, for the storage of keys, their copy of post standing security guard orders, post standing security orders, log book, tools and other material. The container could also be used for the temporary protection of material handed in by officers working late until it is returned by the guard to a particular container in registry. It is suggested therefore that the security guard room be provided with a security shell and enclosure for the exclusive use of the security guards.

Document disclosed under the *Access to Information Act*
Document divulgué en vertu de la *Loi sur l'accès à l'information*

SECURITY GUARD SCHEDULE OF WORK

10. Security guards now operate to a 16-hour shift. This unsatisfactory system was adopted because of the hardship which would be imposed on guards in travelling more frequently long distances to and from the chancery in working to shorter shifts. If the present system is to continue serious consideration must be given to the provision of punch time clocks for use by the guards to ensure that guards do not sleep during these extraordinarily long tours of duty.

MAINTENANCE OF LOG BOOK

11. The value of the security guard log book would be greatly increased by requiring guards to complete it in much greater detail and by having it checked and initialled each morning by the post security officer or some responsible person on his behalf. Amongst other things it should contain particulars of infractions, etc., discovered by the guard.

SUPERVISION OF CHAR STAFF

12. (a) The cleaning of the chancery is the responsibility of the landlord. The washroom is usually cleaned by a single cleaner between 1815 and 1830 hours each evening. Daily cleaning of offices and corridors is done by a female char between 2100 and 2230 hours. The rugs are vacuumed once per week. This may take place at any time between 1800 and 2300 hours. Waxing occurs once per month, usually late in the evening by a special crew of four to six. The communications machine cypher room is the only area to which the char and other cleaning personnel are not given access. Cleaners change frequently. The majority are non-American citizens recently arrived in the country, some from behind the iron curtain.

(b) It is essential that cleaners be supervised closely by the guard during the period of their presence in the chancery. As mentioned above the only way in which this can be accomplished is by fitting offices with security locks and adopting the procedure described in the specimen security guard standing orders provided by the Department.

KEY CONTROL

13. Some security keys are being taken off the premises quite needlessly. When office doors are equipped with security locks the number of keys requiring protection will increase. It is recommended that:

(i) a system of key control such as described in the specimen security guard orders issued by the Department be adopted;

(ii) keys to the main door to the chancery be placed in a sealed and plainly marked envelope and deposited with the Canadian Consulate, New York, for safekeeping and use in emergency;

(iii) the security guard be provided with emergency keys to the day gates on the registry and communications room vault doors (these should normally be kept in a sealed envelope in the guards' security container).

Document disclosed under the *Access to Information Act*
Document divulgué en vertu de la *Loi sur l'accès à l'information*

DEPARTMENT OF EXTERNAL AFFAIRS, CANADA.

NUMBERED LETTER

TO: THE UNDER-SECRETARY OF STATE FOR EXTERNAL AFFAIRS, OTTAWA, CANADA.

FROM: Permanent Mission of Canada to the United Nations, New York.

Reference:

Subject: Security Procedures.

Security: SECRET

No: 527

Date: July 3, 1959

Enclosures: 1 env.

Air or Surface Mail: courier

Post File No:

Ottawa File No. 50048-AF-40

58 | 50

922

References

D2

1 2 3 4 5 6 7 8 9 10 11

JUL 1959

Following the recent visit of the Departmental Security Officer, steps have been taken to ensure that the combinations of safes in this mission are not carried on slips of paper. In the Communications branch in particular, where there are a great number of combinations used by the Communications staff, arrangements have been made for a record of all the combinations to be kept in one safe whose combination will be committed to memory by the staff.

2. These combinations have recently been changed and a record of the new ones is contained in the letter which we are enclosing for the Departmental Security Officer.

Permanent Mission.

Internal Circulation

Mr. Reid to note and file please

J H Halstead

WM 9/7/59

D

noted 9/7/59.

Please file

Distribution to Posts

Ext. 182A (Rev. 2/52)

Document disclosed under the *Access to Information Act*
Document divulgué en vertu de la *Loi sur l'accès à l'information*

1959 JUL 6 PM 12:50

Document disclosed under the Access to Information Act
Document divulgué en vertu de la Loi sur l'accès à l'information

DEPARTMENT OF EXTERNAL AFFAIRS, CANADA

75

FILE COPY

OUTGOING MESSAGE

DATE	FILE		SECURITY
	50078-AF-40		
26/6/59	70	50	UNCLASS

FM: EXTERNAL OTTAWA

NUMBER	PRECEDENCE	COMCENTRE USE ONLY	
DS-88			

TO: PERMIS NEW YORK

INFO:

Ref.:

Subject:

TIMMERMAN ARRIVING NEW YORK TCA 326 FROM MONTREAL ON SUNDAY AFTERNOON.

LOCAL DISTRIBUTION No distribution

ORIGINATOR	DIVISION	PHONE	APPROVED BY
SIG..... NAME...J. Timmerman/r.jt.....	D. L. (2)	2-5124	SIG..... NAME.....

EXT. 18 (REV. 12/56)

Document disclosed under the *Access to Information Act*
Document divulgué en vertu de la *Loi sur l'accès à l'information*

File 50048-AF.40 7/7

June 16, 1959.

MEMORANDUM

Subject: Allocation of Duties.

Attached is a revised allocation of duties for the officers of this Mission which is to take effect immediately and to remain in effect until a replacement for Mr. Hadwen arrives.

The "action briefs" and "watching briefs" contain those subjects that are actually under direct consideration in the United Nations. The "area responsibilities", by contrast, are primarily intended to indicate who the officers concerned are for subjects outside the United Nations on which we receive communications for our information.

The "special liaison responsibilities" are only for the guidance of the officers themselves in their relations with the United Nations Secretariat and other Missions, and should be ignored by Registry and Communications in the distribution of telegrams and despatches.

J.G.H. Halstead.

Document disclosed under the *Access to Information Act*
Document divulgué en vertu de la *Loi sur l'accès à l'information*

MR. HALSTEAD

I - Head of Chancery:

1) Co-ordination of Mission work;

2) Supervision of administrative and personnel matters;

3) Security Officer.

II - Action and Watching Briefs (U.N. Subjects):

1) Security Council (Alternate Representative);

2) United Nations security machinery (including policy toward UNEF, UNTSO, UNMOGIP and other possible United Nations peace bodies);

3) Middle East political problems (including UNCCP);

4) Algeria;

5) Korea (including UNCURK);

6) Governing Council of the Special Fund;

7) Commission on International Commodity Trade.

III - Area Responsibilities:

1) Germany and Berlin;

2) Indo-China (Viet Nam, Cambodia and Laos);

3) Korea.

IV - Special Liaison Responsibilities:

1) United Nations Office of the Secretary-General and Office for Special Political Affairs;

2) United Nations Department of Political and Security Council Affairs;

3) Security Council Delegations (Argentina, China, France, Italy, Japan, Panama, Tunisia, USSR, United Kingdom and United States);

4) Soviet Bloc and Yugoslav Delegations;

5) Arab Delegations and Israel.

Document disclosed under the *Access to Information Act*
Document divulgué en vertu de la *Loi sur l'accès à l'information*

MR. CURRIE

I - Action Briefs (U.N. Subjects):

1) Security Council (preparation of documentation, reporting, etc.);

2) Disarmament Commission;

3) Ad Hoc Committee on Outer Space;

4) Atomic Energy questions.

II - Watching Briefs (U.N. Subjects):

1) United Nations General Assembly First and Special Political Committee matters;

2) United Nations membership and Chinese representation;

3) Soviet policy in the U.N. (including East-West relations, peaceful co-existence, etc.);

4) Hungary;

5) IAEA;

6) Elections (General Assembly offices and the three Councils).

III - Area Responsibilities:

1) the USSR and Eastern Europe (including Yugoslavia);

2) Communist China and Formosa;

3) Latin America;

4) Antarctica.

IV - Special Liaison Responsibilities:

1) United Nations Department of Political and Security Council Affairs (particularly the Disarmament Affairs Group);

2) Security Council Delegations;

3) Latin American Delegations.

Document disclosed under the *Access to Information Act*
Document divulgué en vertu de la *Loi sur l'accès à l'information*

MR. ARNOULD

I - Action Briefs (U.N. Subjects):

1) Administrative and budgetary questions;

   a) Advisory Committee on Administrative and Budgetary Questions;

   b) Committee on Contributions;

   c) Staff Pensions Committee;

2) Voluntary Aid Programmes (specifically UNKRA, UNICEF, UNRWA and UNREF);

3) Negotiating Committee on Extra Budgetary Funds;

4) Technical Assistance Programmes;

5) Commission on Status of Women;

6) Commission on Narcotic Drugs and Permanent Central Opium Board;

7) Library Officer.

II - Watching Briefs (U.N. Subjects):

1) Trusteeship;

   a) Committee on Information from Non-Self-Governing Territories;

   b) Committee on South West Africa;

2) Economic and Social Council economic questions;

3) Regional Economic Commissions;

4) United Nations General Assembly Second Committee matters;

5) United Nations General Assembly Fourth Committee matters;

6) United Nations General Assembly Fifth Committee matters;

7) Specialized Agencies;

8) Middle East political problems (including specifically refugees and proposed development fund).

III ...../2

Document disclosed under the *Access to Information Act*
Document divulgué en vertu de la *Loi sur l'accès à l'information*

Mr. Arnould (continued)

III - Area Responsibilities:

1) the Middle East (including Turkey and Iran);

2) Africa;

3) the Commonwealth (excluding the Asian members.

IV - Special Liaison Responsibilities:

1) United Nations Office of the Controller;

2) United Nations Technical Assistance Board;

3) United Nations Department of Trusteeship;

4) Commonwealth Delegations;

5) Arab Delegations;

6) African Delegations.

Document disclosed under the *Access to Information Act*
Document divulgué en vertu de la *Loi sur l'accès à l'information*

MR. MATHIEU

I - Action Briefs (U.N. Subjects):

1) Press relations;

2) Public relations and public information;

3) Legal questions;

4) Protocol questions;

5) UNEF, UNTSO and UNMOGIP administrative and personnel questions (with Mr. Arnould);

6) Population Commission;

7) Statistical Commission.

II - Watching Briefs (U.N. Subjects):

1) Economic and Social Council:

a) social questions (except Refugees, Status of Women and Narcotic Drugs);

b) Co-ordination questions;

2) United Nations General Assembly Third Committee matters (except as otherwise assigned);

3) United Nations General Assembly Sixth Committee matters;

4) International Law Commission;

5) United Nations public information programmes.

III - Area Responsibilities:

1) Western Europe (excluding Germany);

2) Asia (excluding Communist China and Formosa, Indo China and Korea);

3) North America.

IV - Special Liaison Responsibilities:

1) United Nations Office of General Services;

2) United Nations Office of Public Information;

3) United Nations Office of Personnel Services;

4) Western European Delegations;

5) Asian Delegations.

Document disclosed under the Access to Information Act
Document divulgué en vertu de la Loi sur l'accès à l'information

B.1.(29) W.Ert.Agmas/ii

DEPARTMENT OF EXTERNAL AFFAIRS, CANADA. (FILE COPY)

NUMBERED LETTER

TO: Permanent Mission of Canada to the United Nations, New York

FROM: THE UNDER-SECRETARY OF STATE FOR EXTERNAL AFFAIRS, OTTAWA, CANADA.

Reference: Circular Document No. A.74/51 of October 19/51

Subject: Reading of Security Regulations

Security: CONFIDENTIAL

No: DS-307

Date: May 8, 1959

Enclosures: -

Air or Surface Mail: Air

Post File No:

Ottawa File No. 50048-AF-40

70 | 50

References

Paragraph 7 of the circular document under reference provides that Canada-based personnel serving at missions abroad must read the Departmental security regulations twice a year. Circular Document No. B.51/55 of September 27, 1955 reminded posts abroad that the previous instructions were still in force although occasionally forgotten or disregarded. You may recall that this matter was brought to your attention last year in our letter DS-714 of December 28, 1959.

2. Our records indicate that you have not complied with these instructions. It is essential that all members of the Department be thoroughly familiar with the security regulations and any other security orders in force at your post. It would be appreciated therefore if you would arrange for all Canada-based personnel at your post to read this material and if you would inform us when this has been done.

Internal Circulation

Under-Secretary of State
for External Affairs.

Distribution to Posts

Ext. 181B (Rev. 2/52)

Document disclosed under the *Access to Information Act*
Document divulgué en vertu de la *Loi sur l'accès à l'information*

Defence Liaison (2) J. Timmerman

Passport Office

UNCLASSIFIED

June 25, 1959

Defence Liaison (2) Division - J. Timmerman

500-48-AF-40	
20	—

Mr. J. Timmerman - Travel to New York

This note is to confirm that I shall be visiting New York onduty for about four days commencing June 28 and, since I will be carrying some classified material, will require my diplomatic passport. I should be grateful, therefore, if as promised on the telephone this morning you would let me have my diplomatic passport before this trip. I shall, of course, relinquish the passport immediately on my return to Ottawa.

J. Timmerman
Defence Liaison (2) Division

Document disclosed under the *Access to Information Act*
Document divulgué en vertu de la *Loi sur l'accès à l'information*

Defence Liaison (2) Division

50048-AF-4 File
70 —

Travel Section

June 11, 1959

Defence Liaison (2) Division

Mr. Timmerman - Travel to New York (Security Inspection)

Would you please make travel arrangements for Mr. Timmerman to leave Ottawa on Sunday, June 21, for New York and to return from New York to Ottawa on the afternoon or evening of Wednesday, June 24.

2. We should also be grateful if you would arrange for a travel advance of $100.

John Starnes

Defence Liaison (2) Division

Document disclosed under the *Access to Information Act*
Document divulgué en vertu de la *Loi sur l'accès à l'information*

DEPARTMENT OF EXTERNAL AFFAIRS, CANADA. *(FILE COPY)*

NUMBERED LETTER

TO: The Permanent Mission of Canada to the United Nations, New York

FROM: THE UNDER-SECRETARY OF STATE FOR EXTERNAL AFFAIRS, OTTAWA, CANADA.

Reference: Your Letter No. 344 of April 27, 1959

Subject: Destruction of Classified Waste - Pagar Disintegrator

Security: CONFIDENTIAL

No: DS- 279

Date: May 7, 1959

Enclosures: -

Air or Surface Mail: Air

Post File No:

Ottawa File No.
50048-N-40; 50048-AF-40
3607-40

References

Thank you for your comprehensive report on the operation of the Pagar Disintegrator and for your suggestions regarding its eventual installation at your chancery. We have reviewed previous correspondence and literature on this machine without being able to find any reference to its output. We should be grateful if you would let us know whether you have an idea of the quantity of waste which could be destroyed by this process in one hour. We are at present testing two electric shredding machines either of which may provide an adequate solution to the problem you are facing. The information required above would be useful in comparing the efficiency of these various machines.

2. It would also be of assistance to us in deciding on the type of machine which would be best suited to your requirements if you would give us an idea of the average amount of classified waste accumulating daily at your mission. Please give separate figures for the communications waste and let us have also any other information which you feel would be useful to us - for instance:

(a) are there any periods of heavy accumulation?
(b) when do they occur?
(c) how often do you destroy obsolete files and other accumulated material? How much material is involved?

We should appreciate an early reply as we are anxious to make satisfactory arrangements for the disposal of classified waste at your mission as soon as possible.

3. A copy of this letter was sent to the Consulate-General, New York. While they need not be concerned with the request contained in paragraph 1 above, we hope that they will give us the information requested above insofar as it applies to them.

for Under-Secretary of State for External Affairs.

Internal Circulation

Distribution to Posts
Consulate-General New York

Ext. 181B (Rev. 2/52)

Document disclosed under the *Access to Information Act*
Document divulgué en vertu de la *Loi sur l'accès à l'information*

DEPARTMENT OF EXTERNAL AFFAIRS, CANADA.

NUMBERED LETTER

TO: THE UNDER-SECRETARY OF STATE FOR EXTERNAL AFFAIRS, OTTAWA, CANADA.

FROM: Permanent Mission of Canada to the United Nations, New York

Reference: Your letter DS-243 of Apr. 14/59
Our letter No. 347 of Apr. 28/59

Subject: Changing of Security Combination Settings

Security: SECRET

No: 357

Date: April 30, 1959

Enclosures: 1 env.

Air or Surface Mail: Air

Post File No:

Ottawa File No.
50048-AF-40
58 | 50

9-20

References

D-2

1
2
3
4
5
6
7
8
9
10

11
4 MAY 1959

In our letter under reference, we explained that the combinations for security locks in Communications section of the Mission would be forwarded to you separately. In accordance with our letter, I attach herewith a sealed envelope containing the combinations of the security locks in the Communications section.

R. E. Ennis
Permanent Mission.

Mr. Reid, please note and file
WM
4/5/59

Internal Circulation

D

Distribution to Posts

notes 4/5/59

Please file

Ext. 182A (Rev. 2/52)

Document disclosed under the *Access to Information Act*
Document divulgué en vertu de la *Loi sur l'accès à l'information*

1959 MAY 4 AM 10:53

Document disclosed under the *Access to Information Act*
Document divulgué en vertu de la *Loi sur l'accès à l'information*

DEPARTMENT OF EXTERNAL AFFAIRS, CANADA.

NUMBERED LETTER

TO: THE UNDER-SECRETARY OF STATE FOR EXTERNAL AFFAIRS, OTTAWA, CANADA.

FROM: Permanent Mission of Canada to the United Nations, New York

Reference: Your letter DS-243 of April 14/59

Subject: Changing of Security Combination Settings

919

Security: SECRET

No: 347

Date: April 28, 1959

Enclosures: 1 env.

Air or Surface Mail: Air

Post File No:

Ottawa File No.	
50048-AF-40	
70	40

References

D-2

1
2
3
4
5
6
7
8
9
10

30 APR 1959

In accordance with the procedures set out in Administrative Circular 8/56, we are attaching a sealed envelope containing combinations for the Mission security locks, with the exception of those in the Communications Section. The security locks in the Communications Section are not changed by the security guards as are those in the rest of the Mission, but by the Mission technician. We have, therefore, made arrangements for Communications to place their own combination numbers in a separate sealed envelope for transmission to you. The Chief of the Communications Section has been asked to see that the locks are changed within the next few days and the sealed envelope from the Communications Section will be going forward to you shortly.

Internal Circulation

Mr. Reid to note and file.

1/5/59.

C S A Rivet
Permanent Mission.

D

noted May 1/59.

Distribution to Posts

Ext. 182A (Rev. 2/52)

Document disclosed under the *Access to Information Act*
Document divulgué en vertu de la *Loi sur l'accès à l'information*

1959 APR 30 PM 12:25

Document disclosed under the *Access to Information Act*
Document divulgué en vertu de la *Loi sur l'accès à l'information*

DEPARTMENT OF EXTERNAL AFFAIRS, CANADA.

NUMBERED LETTER

TO: THE UNDER-SECRETARY OF STATE FOR EXTERNAL AFFAIRS, OTTAWA, CANADA.

FROM: Permanent Mission of Canada to the United Nations, New York, N. Y.

Reference: Your Letter DS.694 of Dec. 18, 1958

Subject: Destruction of Classified Waste - Pagar Disintegrator

Security: CONFIDENTIAL

No: 344

Date: April 27, 1959

Enclosures: 2 x 1 glass jar

Air or Surface Mail:

Post File No:

Ottawa File No.	
5-0048-AF-40	
70	58

References

D-2

1	
2	
3	
4	
5	
6	
7	
8	
9	
10	

30 APR 1959

Internal Circulation

D

Distribution to Posts

Copy on 3607-40.

An officer of the Mission has been to Hatboro to witness a demonstration of the Pagar Disintegrator. The machine is sturdily built and relatively compact. The operation of disintegration is clean and quick. We are sending you a jar of the machine's product for inspection. You will note that the waste is scarcely damp and seems completely satisfactory from a security point of view. However, as some moisture does remain in the pulp, for its ultimate disposal the officials at the factory recommend the use of reinforced bags or boxes similar to those which are used for ice cubes.

2. The machine is not messy to operate and is easy to clean out after use, although this operation does, of course, entail the handling of some residual wet pulp. One of the advantages of the machine is that it is not necessary to make sure that clips and other small metal objects are removed before pulping. They can be removed from the machine when the pulping operation is completed.

3. The problem of installation at the Permanent Mission is not an easy one. As we note in our letter 260 of April 2, the machine requires 3-phase heavy wiring for a 220 volt current. It also requires a water supply and a floor drain for dirty water. The setting up of this machine at the Permanent Mission would entail major modifications. We have spoken to the superintendent about the possible installation of the machine either in our basement storage room or in one of the storage spaces in the Mission premises. We have received an informal estimate from a firm of contractors employed by the building of the cost of furnishing the necessary plumbing in the basement; the estimate is $541.00. We have not received an estimate for the installation of the necessary electrical outlet, but that should not come to more than $50.00 or $70.00. The cost of installing the machine in a storage space in the Mission would be somewhat higher, since it would entail the tearing up of flooring and the penetration of walls, which would have to be re-tiled, replastered and re-papered. While the costs we have cited are only a rough estimate, we can proceed with the normal tender routine as soon as we have your authority.

..2

Ext. 182A (Rev. 2/52)

Document disclosed under the *Access to Information Act*
Document divulgué en vertu de la *Loi sur l'accès à l'information*

1959 APR 30 AM 10:52

Document disclosed under the *Access to Information Act*
Document divulgué en vertu de la *Loi sur l'accès à l'information*

CONFIDENTIAL

4. Apart from the problem of installation, there is the question of who should be responsible for operating the machine. Once it is installed, the manufacturers are prepared to send an instructor to the Mission to demonstrate the proper working and maintenance of the Disintegrator. We should, however, be grateful to receive guidance as to who should operate the machine. If the Security Guards are to be employed for this task, it would be very much more satisfactory if the machine were installed in the office premises rather than in the basement storage. As you know, the Guards are only on duty during the quiet hours. The Guards would have to leave the offices for the one or two hours that the job of destruction takes. Furthermore, they would have to carry classified waste from the Mission to the basement in an empty and darkened building. If Registry personnel were used, they would be away from their job in registry for the full time of the process of destruction if the machine were in the basement. If the machine were in the offices, the time of Registry personnel would be less taken up, since it can run unattended, in a secure place. If Registry personnel are designated, however, the question of compensation may arise. From the foregoing, we would suggest that it would be more secure and efficient if the machine were installed in the Mission offices, although the installation charges might be higher.

5. We attach the latest brochure on the Pagar Disintegrator as well as a set of diagrams of the machine. If there is any further information you wish us to obtain, please let us know. We should be grateful for your guidance on the points we have raised.

Permanent Mission

PAGAR*

DISINTEGRATOR

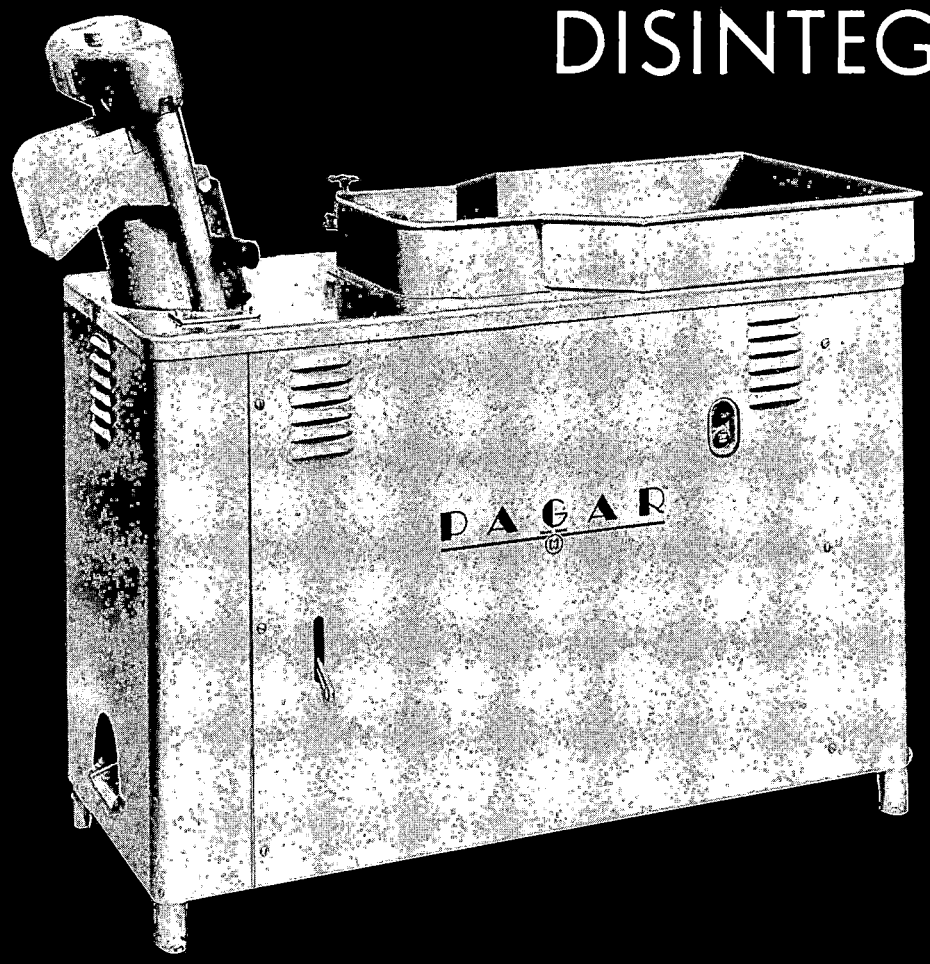

THE ONLY DISPOSAL METHOD
THAT DOES NOT DISCHARGE PULP

DOWN THE DRAIN!

000137

Garbage-Paper Service

REDUCED TO ODORLESS PULP

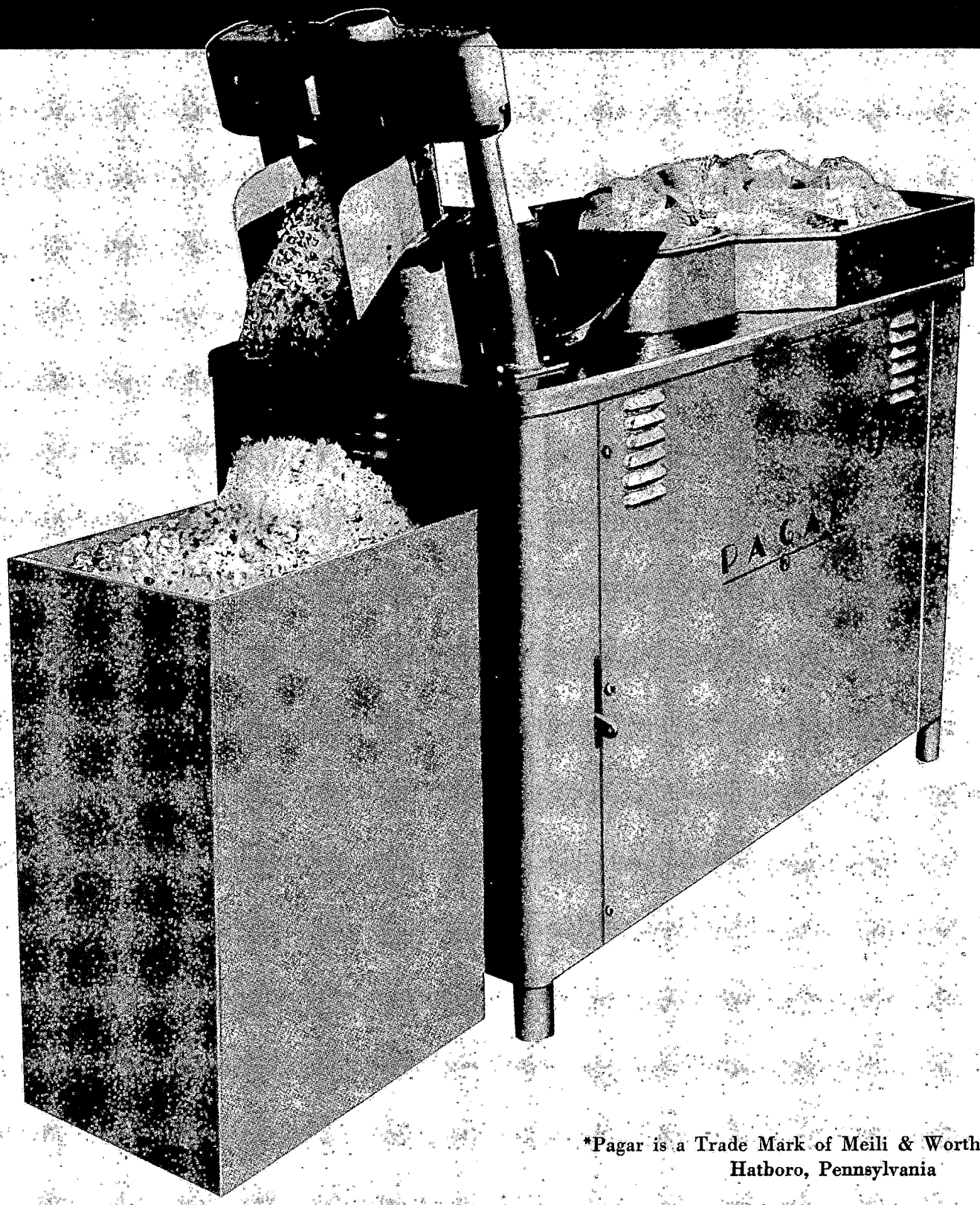

*Pagar is a Trade Mark of Meili & Worthington, Inc.
Hatboro, Pennsylvania

000138

Document disclos
Document divulgué e

PAGAR will pay for itself over and over again

1 No costly refrigeration required

2 Eliminates disposal bottlenecks – stops rush hour accumulation

3 Greatly reduces volume of food waste, paper service and vegetable trimmings

4 Saves labor handling and hauling expenses

5 Saves floor space and floor space is valuable

PAGAR*

DISINTEGRATOR

DESTRUCTION OF CLASSIFIED PAPERS

1 – Disintegrates entirely

2 – Renders illegible

3 – Cannot be reconstructed

4 – Can be installed in any area

5 – Floor drain is required

ONE YEAR GUARANTEE

PAGAR is guaranteed against defects in material and workmanship for a period of one year.

Solve THE REFUSE PROBLEMS for

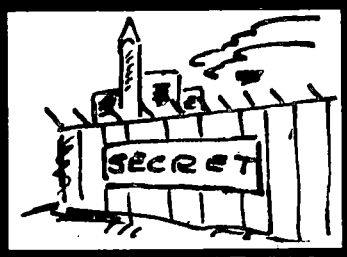

CLOSED AREAS

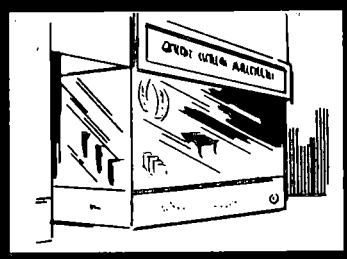

FOOD STORES

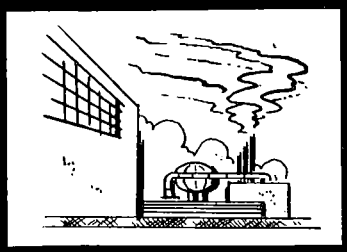

INDUSTRY

HOSPITALS

SCHOOLS

000139

Document disclosed under the *Access to Information Act*
Document divulgué en vertu de la *Loi sur l'accès à l'information*

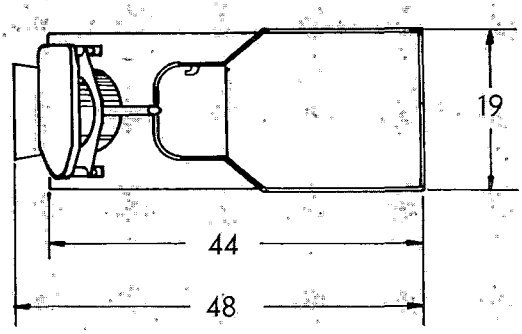

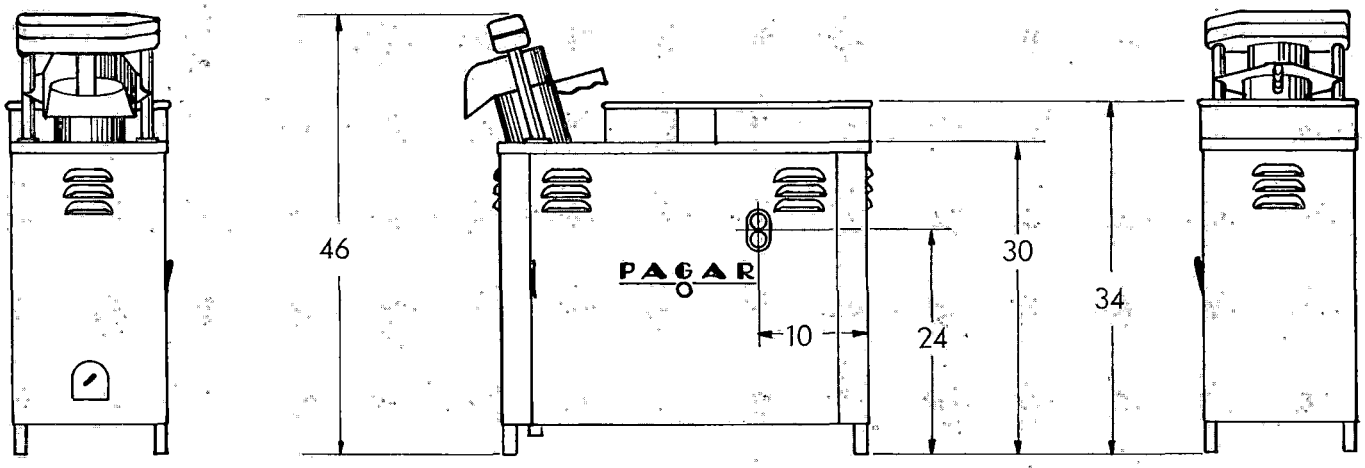

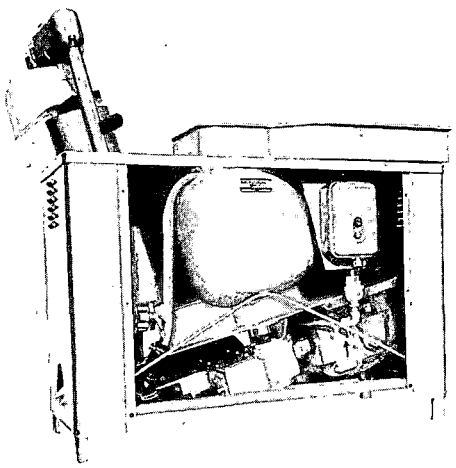

THIS MACHINE IS MANUFACTURED IN COMPLIANCE WITH THE REQUIREMENTS AND REGULATIONS OF THE UNITED STATES PUBLIC HEALTH SERVICE. . . .

MODEL 18 STANDARD

CONSTRUCTION
Welded Steel

DIMENSIONS
30" High Work Area
46" High Overall at Head
19" Wide
44" Long

POWER
Electric Motor 3 H.P. 3 phase
With Switch
Single Phase & 2 Phase
Also Available at Extra Cost

RECEIVING TRAY*
4" Deep—20" Wide—30" Long

FINISH
Painted Hammertone Gray

SHIPPING WEIGHT
Approximately 565 lbs.

OPTIONAL FEATURES
Stainless Steel Tray and Panels
at Extra Cost
8" Deep Tray
at Extra Cost
Side or End Switch Controls

MANUFACTURED BY:
MEILI & WORTHINGTON, INC.
HATBORO, PA.

Document disclosed under the Access to Information Act
Document divulgué en vertu de la Loi sur l'accès à l'information

	1	Head Assembly
	2	Wiper
*	3	Screen Assembly
*	4	Brush Holder
	5	Extractor - Brush
	6	Extractor - Steel
	7	Handle Grip
	8	Water Control Valve
	9	Water Control Valve Handle
	10	Clean Out Plug
*	11	Clean Out Chute
	12	Hose - Gates CH-38
	13	Hose - Gates 1¼ I.D. x 12
	14	Hose - Gates 1¼ I.D. x 6
	15	Water Pump
	16	Coupling - Boston Gear FCR 12 x ½
	17	Extractor Drive Shaft
	18	Gear Box
	19	Coupling - Gerbing G500 - 1 x 1 1/8
	20	Electric Motor

*	21	Side Panel - Plain
*	22	Side Panel - Switch Mount
*	23	End Panel - Plain
*	24	End Panel - Switch Mount
*	25	End Panel - Drain Cutout
	26	Packing Gland - Bearing
	27	Packing Gland - Retainer
	28	Packing - Garlock 733 - ¼ s q.
	29	¼-20-¼ Set Screw
	30	Take-up Ring
	31	Rubber Slinger Ring
	32	Impellar
	33	Impellar Shaft
*	34	Receiving Tray
	35	½" Gate Valve
*	36	Top Panel
	37	Thermal Overload Switch

* Parts marked with an Asterisk may be purchased of Stainless Steel.

* PAGAR is the Trade Mark of Meili & Worthington, Inc.

MEILI & WORTHINGTON, INC.
HATBORO, PA.

Parts List - Page 2.
Type HE-18 PAGAR* DISINTEGRATOR

DRAWN BY	DATE	
RAM	20 Apr 56	A18P-1000-71.
SCALE:	CHECKED BY	DATE

000141

Document disclosed under the Access to Information Act
Document divulgué en vertu de la Loi sur l'accès à l'information

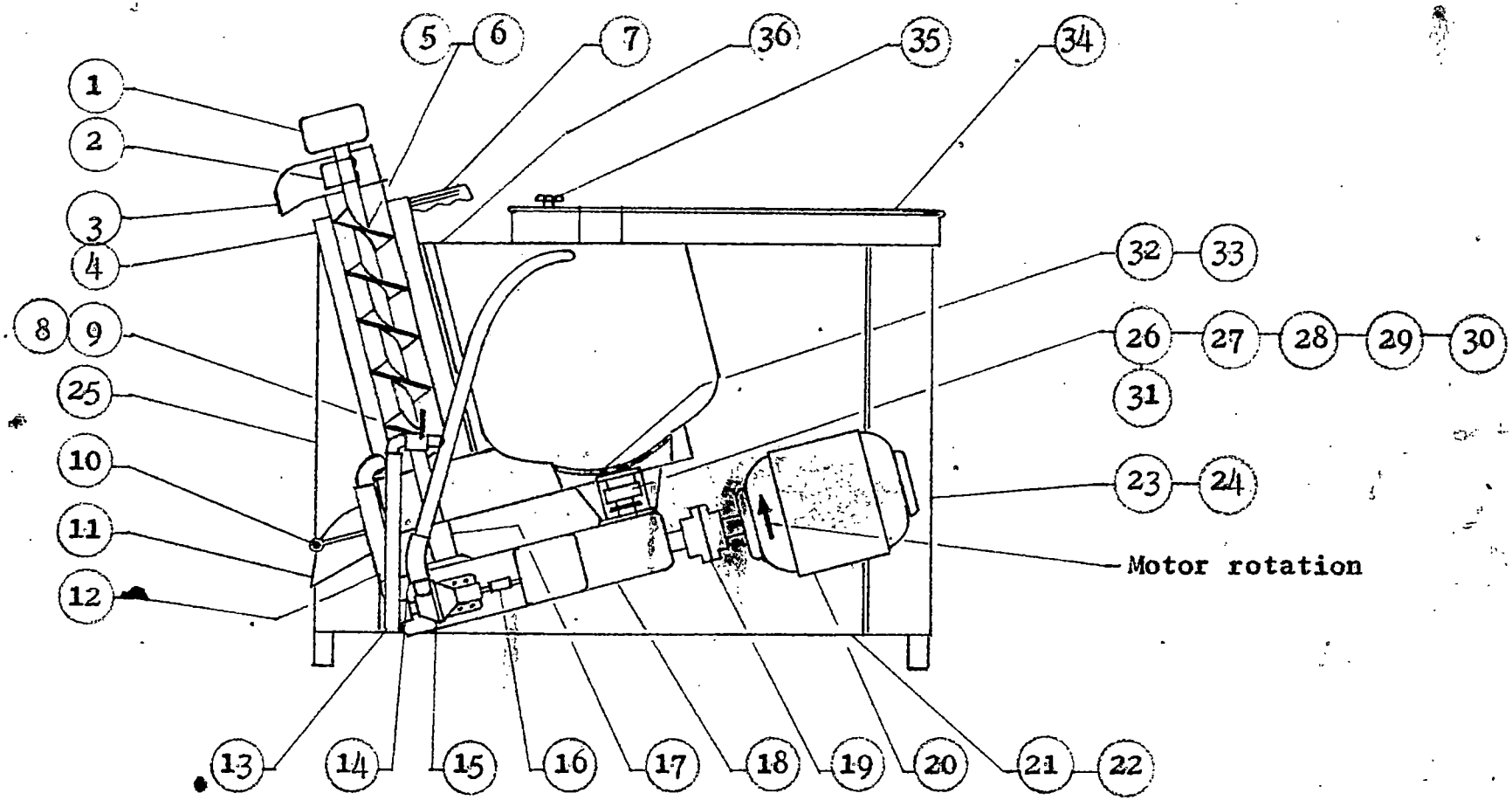

MEILI & WORTHINGTON, INC.
HATBORO, PA.

Parts List- Page 1

Type HE-18 PAGAR* Disintegrator

DRAWN BY	DATE	
RAW	20APR 56	
SCALE:	CHECKED BY	DATE	A18P-1000-70

000142

* PAGAR is the Trade Mark of Meili & Worthington, Inc.

Document disclosed under the *Access to Information Act*
Document divulgué en vertu de la *Loi sur l'accès à l'information*

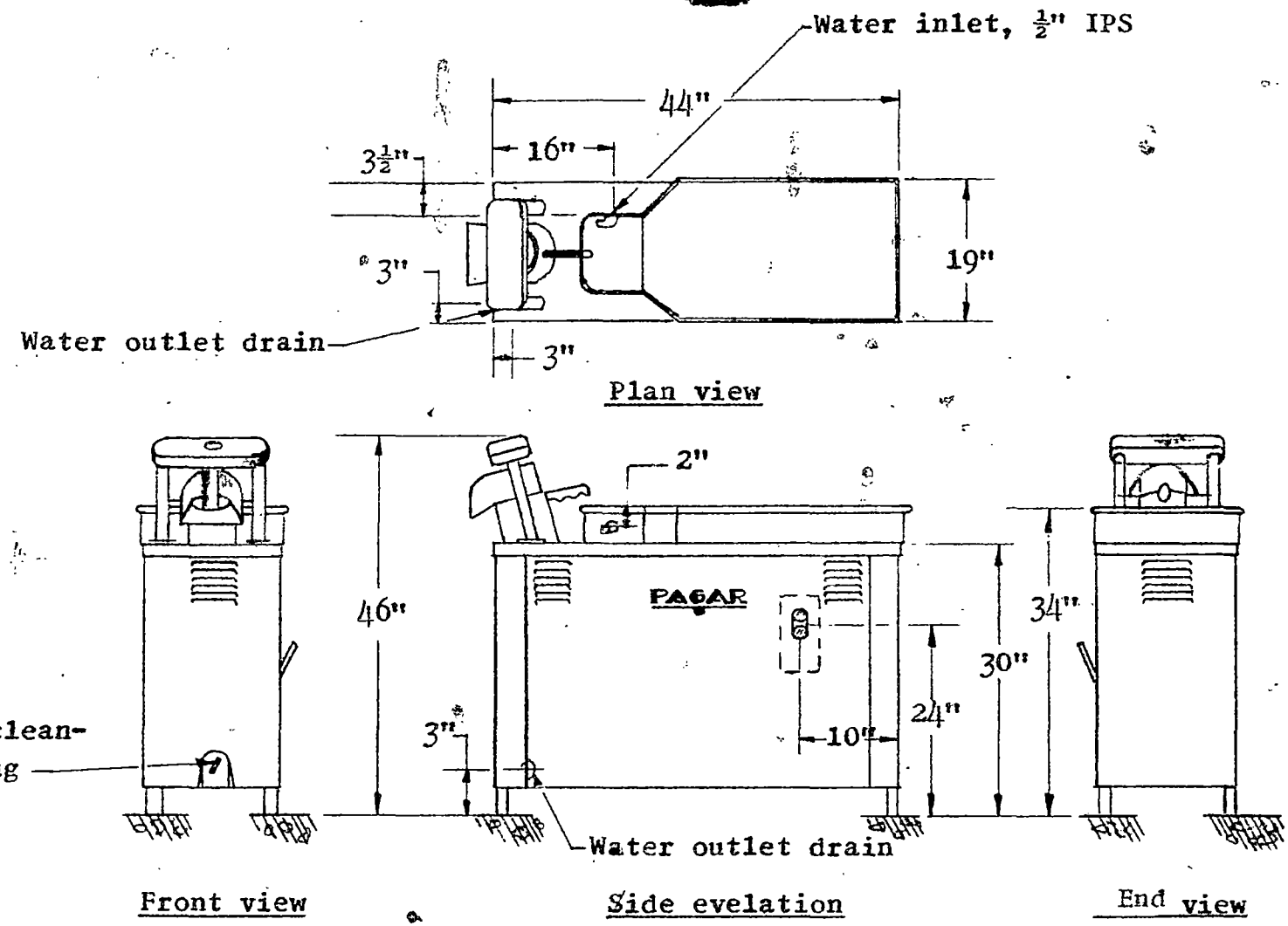

Standard model PAGAR*

Motor- 3HP, 220 V , 3 Phase
220V, Single phase available at additional cost.

* PAGAR is the Trade Mark of Meili & Worthington, Inc.

MEILI & WORTHINGTON, INC.
HATBORO, PA.

Mfgrs. of
the PAGAR* disintegrator

DRAWN BY	DATE	
RAM I	23 Mar 56	
SCALE: No scale	CHECKED BY	DATE	A 18P-1000-50

Document disclosed under the *Access to Information Act*
Document divulgué en vertu de la *Loi sur l'accès à l'information*

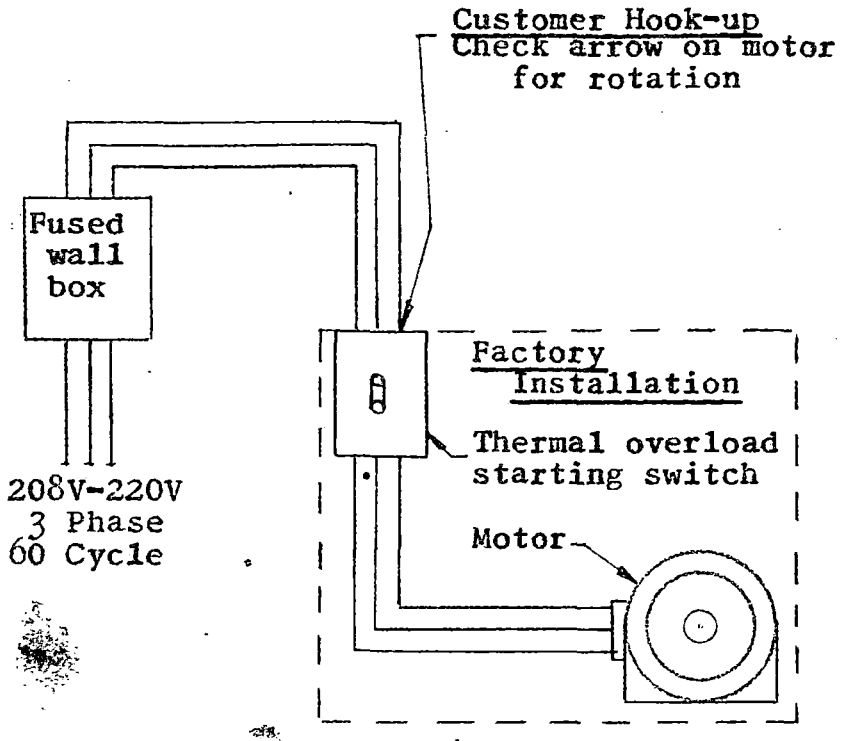

Type HE-18 Side mounted switch

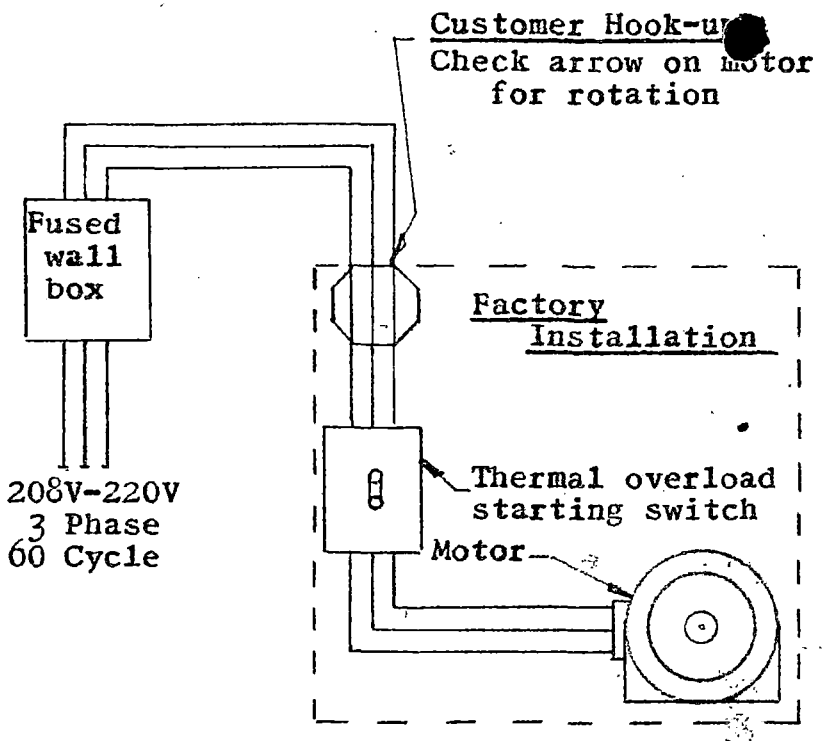

Type HE-18 End mounted switch

* PAGAR is the Trade Mark of Meili & Worthington, Inc.

MEILI & WORTHINGTON, INC.
HATBORO, PA.

Wiring Diagram
Type HE-18 PAGAR* Disintegrator

DRAWN BY RAM	DATE 17 Apr. 56	A 18P-1000-60
SCALE:	CHECKED BY	DATE

Document disclosed under the *Access to Information Act*
Document divulgué en vertu de la *Loi sur l'accès à l'information*

DEPARTMENT OF EXTERNAL AFFAIRS, CANADA.

NUMBERED LETTER

(File Copy)

TO: Permanent Mission of Canada to the United Nations, New York

FROM: THE UNDER-SECRETARY OF STATE FOR EXTERNAL AFFAIRS, OTTAWA, CANADA.

Reference: Your Letter No. 13 of January 8, 1958

Subject: Changing of Security Combination Settings

Security: CONFIDENTIAL

No: DS-243

Date: April 14, 1959

Enclosures: -

Air or Surface Mail: Air

Post File No:

Ottawa File No. 50048- AF-40

20 | 10

References

Internal Circulation

Distribution to Posts

It appears from our records that you have not changed the settings of the security combination locks in use at your mission since approximately the date of your letter under reference or that, if those settings have been changed, you have neglected to report them in accordance with the instructions contained in Circular Document Admin. No. 8/56 of February 20, 1956, which provides among other things that security combination settings must be changed and reported to the Department at least every three months.

2. Failure to comply with these instructions could have serious consequences. You will realize also that if you changed your combinations but failed to report them in the approved manner it would be impossible for us to be of any assistance to you in the event of a lockout or other accident affecting the functioning of your security locks.

3. We should be grateful therefore if you would change and report immediately all the settings of the combination security locks, including spares, in the custody of your mission. Please note in this respect that all spare combination locks should be set on 10-20-30 (S&G padlocks) or on 20-40-60 (three-wheel security combination locks) which are the manufacturer's settings. A tag showing the appropriate neutral combination should be attached to each spare lock which should, of course, be stored in a security container while not in use.

Under-Secretary of State
for External Affairs.

Ext. 181B (Rev. 2/52)

Document disclosed under the Access to Information Act
Document divulgué en vertu de la Loi sur l'accès à l'information

DEPARTMENT OF EXTERNAL AFFAIRS, CANADA. (DUPLICATE)

NUMBERED LETTER

Confidential

TO: THE UNDER-SECRETARY OF STATE FOR EXTERNAL AFFAIRS, OTTAWA, CANADA.

FROM: Permanent Mission of Canada to the United Nations, New York, N. Y.

Reference: Your Letter DS 694 of December 18

Subject: Destruction of Classified Waste

Security:

No: 260

Date: April 2, 1959

Enclosures:

Air or Surface Mail:

Post File No: 4

Ottawa File No.	
J0048-AF 40	
Original on file	3607-40

References

We are now in a position to send an officer to see a demonstration of the Pagar Disintegrator in Hatboro. We have written to Messrs. Meili and Worthington to arrange for a demonstration and we will report to you on the functioning of the machine within the next two weeks.

2. On the basis of the brochure which you sent us, it is possible for us to make certain preliminary observations. Although the machine does not seem to require a drain for the pulp, a floor drain for water seems to be required, as well as a water connection. The machine requires heavy wiring and a small room or space to itself. It is difficult to see where these requirements can be met at the Permanent Mission. It is possible that there may be room somewhere at the Consulate-General. We have not discussed the matter with the Consulate-General, but we will do so, informally, after we have witnessed the performance of the machine.

3. Although there are problems involved in the installation of a machine such as the Pagar Disintegrator, we are in entire agreement with you that it would be desirable to find some method of waste destruction in New York, to replace the very troublesome and inefficient arrangement of sending our waste to Washington.

Internal Circulation

J. G. H. HALSTEAD

Permanent Mission

Distribution to Posts

(Ext. 182C(Rev. 2/52)

Document disclosed under the *Access to Information Act*
Document divulgué en vertu de la *Loi sur l'accès à l'information*

File
50048-AF.40
7/7

RESTRICTED

March 26, 1959.

MEMORANDUM FOR ALL MEMBERS OF THE MISSION

Subject: Registry Procedure.

The attached instructions concerning the procedure to be followed in the handling and filing of all telegrams and official correspondence in this Mission are to be put into effect immediately. They do not apply to commercial correspondence, advertisements, information circulars or publications, for which separate instructions will be issued later.

To ensure the smooth working of the attached instructions it will be necessary for the Registry:

(a) to keep charge-out cards to record the names of the persons to whom files and false dockets are charged and the dates of removal and return;

(b) to maintain file pockets for all files, which will hold papers temporarily while the files themselves are out on charge;

(c) to establish and maintain a B.F. index to record the names of the officers desiring to bring files forward, the file numbers and the dates on which they are desired; and

(d) to establish and maintain a card index for all incoming "action telegrams" and outgoing telegrams, incoming "action letters" and outgoing numbered letters and despatches, and other official correspondence, except circulars.

Registration -
numbering T.S
Filing -

J.G.H. Halstead.

Document disclosed under the *Access to Information Act*
Document divulgué en vertu de la *Loi sur l'accès à l'information*

J.G.H.Halstead/rcf

RESTRICTED

March 26, 1959.

INSTRUCTIONS FOR REGISTRY PROCEDURE

I. CHARGE-OUT PROCEDURE

No file will be removed from Registry without recording the name of the person to whom the file is charged and the date.

II. "B.F." PROCEDURE

1. Active files and false dockets should not be held outside Registry any longer than absolutely necessary, if possible not more than two or three days at a time.

2. If action on a file or false docket cannot be completed within that time, the paper concerned should be marked "B.F.", with the date on which it is to be brought forward and the initials of the officer involved.

III. INCOMING TELEGRAMS

1. Incoming telegrams will be treated in two categories;

   (a) "action telegrams" - comprising those telegrams addressed to Permis, New York; and

   (b) "information telegrams" - comprising those telegrams repeated to Permis, New York for information.

2. Action telegrams will be treated as follows:

   (a) the top copy will be stamped "for action", placed whenever possible on the relevant file above the red sheet, and referred to the officer to whom the subject matter of the telegram has been assigned (according to the memorandum on Allocation of Duties);

   (b) if the relevant file is not in Registry, the "for action" copy will be placed on a false docket for reference to the officer concerned;

   (c) at the same time a second copy will be stamped "temporary file copy" and placed immediately in the relevant file pocket, and further copies will be cross-filed on any related file;

   (d) other copies (except in the case of telegrams with restricted circulation, for which see below) will be distributed loose to the other officers of the Mission and destroyed on return to Registry;

   (e) the officer to whom the "for action" copy is referred will record briefly in writing on the telegram what action he takes and will then mark the telegram for others to see, if appropriate, and for file;

   (f) when marked "file" and initialled, the "for action" copy will be placed on the relevant file and the "temporary file copy" will be

Document disclosed under the *Access to Information Act*
Document divulgué en vertu de la *Loi sur l'accès à l'information*

removed from the file pocket and destroyed.

3. Information telegrams will be treated as follows:

   (a) the top copy will be stamped "for information" and placed on a false docket for reference to the officer to whom the subject matter of the telegram has been assigned (the file need not be attached unless requested by the officer concerned);

   (b) at the same time a second copy will be stamped "temporary file copy" and placed immediately in the relevant file pocket, and further copies will be cross-filed on any related files;

   (c) other copies (except in the case of telegrams with restricted circulation, for which see below) will be distributed loose to the other officers of the Mission and destroyed on return to Registry;

   (d) the officer to whom the "for information" copy is referred may make notations on it for the file or for others to see, and will then mark the telegram for file; and

   (e) when marked "file" and initialled, the "for information" copy will be placed on the relevant file and the "temporary file copy" will be removed from the file pocket and destroyed.

4. No top copy of any incoming telegram (whether it be "for action" or "for information") is to be filed unless it is marked "file" and initialled by an officer of the Mission.

IV. OUTGOING TELEGRAMS

1. Outgoing telegrams will be returned to the originating officer after approval and before they go to Communications. The originating officer will be responsible for seeing that all copies are identical with respect to changes and corrections and that the first two copies are initialled by both the originating officer and the approving officer.

2. The top copy will be retained in Communications and the first carbon copy will be passed from Communications to Registry for file.

3. No outgoing telegram will be filed unless it is initialled by both the originating officer and the approving officer.

4. Mimeographed copies of outgoing telegrams (except telegrams with restricted circulation, for which see below) will be distributed loose to all officers of the Mission and destroyed on return to Registry.

Document disclosed under the *Access to Information Act*
Document divulgué en vertu de la *Loi sur l'accès à l'information*

V. INCOMING NUMBERED LETTERS AND DESPATCHES.

1. Written communications coming by bag to this Mission from the Department or other Missions abroad will be treated in the same two categories as incoming telegrams:

   (a) "action letters" - comprising those numbered letters and despatches addressed to Permis, New York; and

   (b) "information letters" - comprising those numbered letters and despatches referred to Permis, New York for information with or without transmittal slips.

2. Action letters will be treated as follows:

   (a) the top copy will be placed whenever possible on the relevant file above the red sheet and referred to the officer to whom the subject matter of the letter has been assigned;

   (b) if the relevant file is not in Registry, the top copy will be placed on a false docket for reference to the officer concerned;

   (c) if there is a carbon copy, it will be placed immediately in the relevant file pocket;

   (d) the officer to whom the top copy is referred will record briefly in writing on the letter what action he takes and will then mark the letter for others to see, if appropriate, and for file (he may also mark it for cross referencing on any related files, if appropriate);

   (e) when marked "file" and initialled, the top copy will be placed on the relevant file and the carbon copy (if any) will be removed from the file pocket and either destroyed or placed as cross reference on a related file.

3. Information letters will be treated as follows:

   (a) they will be placed separately in false dockets (or two or more may be grouped together in one false docket provided they deal with the same subject) and circulated first to the officer concerned with the particular subject and then (provided they are not letters with restricted circulation for which see below) to the other officers of the Mission;

   (b) the officer concerned will be responsible for marking the letters thus circulated either "file", if he considers the material worth keeping, or "destroy", if he does not consider it worth keeping;

   (c) when the letters have completed circulation and return to Registry, they will be either filed or destroyed according to the notation on them.

Document disclosed under the *Access to Information Act*
Document divulgué en vertu de la *Loi sur l'accès à l'information*

4. No incoming numbered letter or despatch is to be filed unless it is marked "file" and initialled by an officer of the Mission.

VI. OUTGOING NUMBERED LETTERS AND DESPATCHES.

1. All copies of outgoing numbered letters and despatches will be stamped with the name of the approving officer immediately after signature and will then be returned to the originating officer.

2. The originating officer will be responsible for seeing that all copies are identical with respect to changes and corrections, and bear the name of the approving officer. He will also be responsible for seeing that extra copies are made and marked for other files if any cross reference is necessary.

3. The file copy (on green paper) will be placed immediately on the relevant file (or in the file pocket, if the file has been charged out), but only if it bears the names of both the originating officer and the approving officer.

4. A duplicate copy (on flimsy paper) of all outgoing numbered letters and despatches (except those with restricted circulation, for which see below) will be circulated to all officers of the Mission in circulation folders three times a week, after the closing of each bag, and will be destroyed on return to Registry.

VII. SELECTED DOCUMENTS.

1. Each issue of "Selected Documents" will be placed on a false docket and circulated urgently to all officers.

2. Each officer in turn will be responsible for marking for file those of the attached documents which he considers should be retained, and for destruction those which need not be retained.

3. When the false docket returns to Registry on completion of circulation the documents will be detached, those marked "file" and initialled will be placed on the relevant files, and those marked for destruction will be destroyed.

4. The covering circular document will be detached and placed on a general file entitled "Selected Documents", with marginal notes indicating the file numbers, when the documents have been filed and the initials of the officer responsible, when the documents have been destroyed.

VIII. OTHER OFFICIAL CORRESPONDENCE.

1. Other official correspondence excludes correspondence with the Department and other posts abroad, but includes correspondence on official business with the United Nations, other permanent missions, institutions and private individuals.

Document disclosed under the *Access to Information Act*
Document divulgué en vertu de la *Loi sur l'accès à l'information*

2. Such correspondence, when incoming, will be treated in the same way as incoming "action letters". These letters will be referred in the first instance, regardless of the addressee indicated, to the officer concerned with the subject matter involved.

3. Such correspondence, when outgoing, will be treated in the same way as outgoing numbered letters and despatches. Duplicate copies of the other official correspondence will be circulated separately, however, and not included in the circulation folders for outgoing numbered letters and despatches.

IX. RESTRICTED CIRCULATION

1. Except for the top copy of incoming communications (which goes to the officer responsible for the subject matter), copies of top secret and Canadian eyes only communications will be circulated only to the Head of Mission and the Head of Chancery, unless they indicate otherwise.

2. If the originating officer wishes to restrict the circulation of other outgoing communications, either for personal or for official reasons, he should mark "no distribution" on the file copy of the telegram or letter, and such communications will then be placed immediately on the relevant file without being circulated.

3. Incoming letters marked "Personnel Information" will be referred in the first instance to the Administration Officer, who will indicate what circulation, if any, they are to be given.

4. Correspondence marked "Personal" or "To be opened by addressee only" will be given no circulation except on instructions of the officer concerned.

Document disclosed under the Access to Information Act
Document divulgué en vertu de la Loi sur l'accès à l'information

Ottawa, March 16, 1959

REG. No.

FROM: THE DEPARTMENT OF EXTERNAL AFFAIRS, CANADA

TO: THE PERMANENT MISSION OF CANADA TO THE UNITED NATIONS,
750 Third Ave., New York, N. Y.

We are forwarding by (COURIER 41) the following:- Mar 17

ONE (1) TWO CELL FLASHLIGHT COMPLETE.
ONE (1) SIX 6 inch Half Round File .
ONE (1) Four Inch Taper File.
ONE (1) PAIR OF 6 inch Needlenose Fliers.
ONE (1) 3 oz. Tine of 3 in 1 Oil.

Balance of tool Kit No. C-18

When the above has been received and checked, would you kindly sign and return the original form Ext. 27 R.

Noted Cdd
24/3/59
Pls Ack

for **Under-Secretary of State for External Affairs**

Att: C. d'Ornano, DL 2, Rm. 251 East Bl.

This is to certify that the above mentioned items have been received in good order.

N.Y.C.	Mar 18, 1959	[illegible]
Place	**Date**	**Signature**

Ext. 27 R (Rev. 2/53)

Document disclosed under the *Access to Information Act*
Document divulgué en vertu de la *Loi sur l'accès à l'information*

1959 MAR 23 AM 9:52

NO ENCLOSURES

Document disclosed under the Access to Information Act
Document divulgué en vertu de la Loi sur l'accès à l'information

D.R. (W.M. Agnes)
Our Files: 50048-M-40
50048-AF-40
50048-G-40

PERSONAL & CONFIDENTIAL

March 13, 1959.

DSS-100

Dear Angus,

I heard that the Communications personnel in Washington have trouble disposing of rather large amounts of classified waste which accumulate in Washington and/or which is received from New York. I was told that destruction of such classified waste was taking too much of the time which should normally be devoted to their regular duties. I have, of course, no intention of telling you what to do in this respect.

The purpose of this note is simply to say that the security guards should be able to assist, if necessary, and that we would not object if they were asked to do so. It is part of their duties if and when required to destroy classified waste including Communications waste. As a precautionary measure against spilling or losses, all waste should be carried in paper bags securely stitched across the mouth.

I might mention that we have good hope to be able to provide a more satisfactory solution to the problem of disposing of New York's waste. More about it later.

Yours ever,

W.M. Agnes

A.J. Matheson, Esq.,
Canadian Embassy,
Washington, D.C.

Document disclosed under the *Access to Information Act*
Document divulgué en vertu de la *Loi sur l'accès à l'information*

DEPARTMENT OF EXTERNAL AFFAIRS, CANADA.

NUMBERED LETTER

TO THE UNDER-SECRETARY OF STATE FOR EXTERNAL AFFAIRS, OTTAWA, CANADA.

FROM: Permanent Mission of Canada to the United Nations, New York

Reference: Your letter DS/119 of Feb.24/59

Subject: Installation of Security Locks

Security: Restricted

No: 183

Date: March 3, 1959

Enclosures:

Air or Surface Mail: Air

Post File No: 4

Ottawa File No. 50048-AF-40

70 | 50

References

D-2

1 2 3 4 5 6 7 8 9 10 11

15 MAR 1959

Internal Circulation

D

Distribution to Posts

Please disregard the first three paragraphs of our Letter 179 of February 26 in answer to your DS.86 of February 11.

2. You are correct in your assumption that we had no other alternative but to have our security locks installed by a reputable carpenter; all doors in our building are made of steel, with a thin covering of plywood, and our guards did not have the proper tools to cope with this type of work; the installation was, however, done under the constant surveillance of our Senior Guard; the relevant security keys were cut by him personally at a nearby locksmith's shop.

Mr Cunningham

Mr Hayes

6/3/59

Permanent Mission.

Ext. 182A (Rev. 2/52)

Document disclosed under the *Access to Information Act*
Document divulgué en vertu de la *Loi sur l'accès à l'information*

1989 MAR 5 PM 12:10

NO ENCLOSURES

Document disclosed under the Access to Information Act
Document divulgué en vertu de la Loi sur l'accès à l'information

File 9-12
3/3

DEPARTMENT OF EXTERNAL AFFAIRS, CANADA.

NUMBERED LETTER

TO: THE UNDER-SECRETARY OF STATE FOR EXTERNAL AFFAIRS, OTTAWA, CANADA.

FROM: Permanent Mission of Canada to the United Nations, New York

Reference: Your letter DS-86 of Feb 11/59

Subject: Cutting of Keys for Locks.

Security: Restricted

No: 179

Date: February 26, 1959

Enclosures:

Air or Surface Mail: Air

Post File No: 4

Ottawa File No.	
50048-AF-40	
58	58

J16

References

D-2

1 2 3 4 5 6 7 8 9 10 11 12

MAR 1959

Internal Circulation

D

Distribution to Posts

The expenditure mentioned in your letter under reference did not cover the cutting of security keys but of five keys for the powder room which were required during the General Assembly; these were done by the building management.

2. You seem to be under the impression that our security locks and keys were purchased locally. If you will refer to your letters DS-249 and 431 of April 25 and August 1, 1958 respectively, you will find that not only were all locks, with two keys each, supplied to us by the Department but that you also gave us authority to have any extra keys required made by a reputable local locksmith.

3. In view of the above, we wonder whether it is necessary for us to send you one sample key for each of the security locks since copies were probably made in the Department before despatch.

4. It is not expected that we shall require additional security keys from the Department. In future, however, vouchers covering keys to non-security locks, obtained locally, will be endorsed in accordance with Departmental regulations.

Permanent Mission.

~~Mr. Keyes to see and~~
file
8/3/59

Ext. 182A (Rev. 2/52)

Document disclosed under the *Access to Information Act*
Document divulgué en vertu de la *Loi sur l'accès à l'information*

1959 MAR 3 AM 9:20

NO ENCLOSURES

Document disclosed under the Access to Information Act
Document divulgué en vertu de la Loi sur l'accès à l'information

D.L.(2)/W.M.Agnes/rjt

DEPARTMENT OF EXTERNAL AFFAIRS, CANADA. *(FILE COPY)*

NUMBERED LETTER

TO: The Permanent Mission of Canada to the United Nations, New York

FROM: THE UNDER-SECRETARY OF STATE FOR EXTERNAL AFFAIRS, OTTAWA, CANADA.

Reference: Our Letter DS-86 of February 11, 1959

Subject: Installation of Security Locks

Security: RESTRICTED

No: DS-119

Date: February 24, 1959

Enclosures:

Air or Surface Mail:

Post File No:

Ottawa File No. 50048-AF-40

70 | 50

References

We have noticed with regret after dispatching the letter under reference that our statement regarding the supply of security locks and keys to your mission is not correct as the authority given in our letter No. DS-249 of April 25, 1958, as an emergency measure applied only to the cutting of security keys needed on that particular occasion. As your security locks were supplied by the Department it will not be necessary therefore to send sample keys to us for our files and you may disregard our instructions on this account.

2. However, the provisions of Circular Document No. B.54/53 of July 8, 1953, should be strictly enforced in future. We have noticed from your accounts for the month of September 1958 (voucher No. 3) that it was found necessary to ask a carpenter to install three (3) security locks at your mission. We assume that the work involved was too extensive or too difficult for the security guards to perform and that the firm selected is entirely reliable.

Under-Secretary of State
for External Affairs.

Internal Circulation

Distribution to Posts

Ext. 181B (Rev. 2/52)

Document disclosed under the *Access to Information Act*
Document divulgué en vertu de la *Loi sur l'accès à l'information*

DEPARTMENT OF EXTERNAL AFFAIRS

MEMORANDUM

TO: Defence Liaison (2) Division

FROM: Finance Division

REFERENCE:

SUBJECT: Lock Installation

Security

Date February 13, 1959

File No. 50048-DF-40

70

1 2 3 4 5 6 7 8 9 10 11

20 FEB 1959

The attached copy of voucher 3 relate to the lock installation and three (3) special security locks, as directed. It is sent to you for your information and necessary action.

The Canadian Permanent Mission
New York, U.S.A.

Voucher 3 - October 1958 Account.

Finance Division.

CIRCULATION

Ext. 326 (6/56)

Document disclosed under the *Access to Information*
Document divulgué en vertu de la *Loi sur l'accès à l'information*

VOUCHER 3

ROBERT CATINO INC. september 26,1958.

CARPENTRY

136 East 55th Street.,

New York 22, N.Y.

Extra work order No.173

Cut out and installed steel buck and installed three(3) special security locks, asidirected.

August 28,29 Carpenter 11 Hrs.at$6.45 perHr.$70.95

Certified Services F. Gagnon Oct.1,1958.

Rec'd payment on 10-2-58 V. Catuio.

Code.CDN-313-14-201

JT. February 18,1959.

Document disclosed under the Access to Information Act
Document divulgué en vertu de la Loi sur l'accès à l'information

DL(2)/C.D'Ormano/W.H.Arnold/gc

DEPARTMENT OF EXTERNAL AFFAIRS, CANADA. *(FILE COPY)*

NUMBERED LETTER

TO: Permanent Mission of Canada to the United Nations, New York, N. Y.

FROM: THE UNDER-SECRETARY OF STATE FOR EXTERNAL AFFAIRS, OTTAWA, CANADA.

Reference: Voucher No. ~~2~~ 51 of ~~September~~ October 1958 Accounts

Subject: Cutting of Keys for Locks

Security: RESTRICTED

No: DS-86

Date: February 11, 1959

Enclosures:

Air or Surface Mail:

Post File No:

Ottawa File No. 50048-~~AF~~-N-40

58 | 50

References

Internal Circulation

Distribution to Posts

* p 8,56

51

Although Voucher No. 2, Mission accounts, for ~~September~~ October 1958 shows our expenditure of ~~$1.25~~ paid for office keys it does not indicate whether or not these keys were cut for security locks. You will recall that Circular Document No. B 54/53 of July 8, 1953 provides that keys for security locks should never be cut locally. We are aware, of course, that the security locks and keys for your mission were purchased locally and that for this reason it may seem unnecessary to enforce this circular document. However, for the sake of consistency and also to maintain better security standards, we should be grateful if you would send us by diplomatic bag one sample key for each of the security locks at your mission. We realize that in order to comply with our request you will have to send us keys which are now in use in the chancery. We shall return them to you by diplomatic bag as soon as we have made copies for our files.

Particular case only
See letter DS 249
April 25, 1958
On this file
W.H.Arnold

2. It would be appreciated if in future you would request duplicate security keys from the Department. Keys to non-security locks may be obtained locally but vouchers reporting corresponding expenditures must be endorsed to certify that the requirements of Circular Document No. 54/53 of July 8, 1953 have been fulfilled.

for the Under-Secretary of State for External Affairs

Ext. 181B (Rev. 2/52)

Document disclosed under the Access to Information Act
Document divulgué en vertu de la Loi sur l'accès à l'information

D.L.(a)/J.C.Clark/rit

DEPARTMENT OF EXTERNAL AFFAIRS, CANADA. (FILE COPY)

NUMBERED LETTER

TO: The Permanent Mission of Canada to the United Nations, New York

FROM: THE UNDER-SECRETARY OF STATE FOR EXTERNAL AFFAIRS, OTTAWA, CANADA.

Reference: Para. 7 of Circular Document No. A.74/51 of October 19, 1951, and Circular Document No. B.51/55 of September 27, 1955.

Subject: Biannual reading by Canadian staff of Departmental security regulations.

Security: CONFIDENTIAL

No: DS-714

Date: December 28, 1958

Enclosures: -

Air or Surface Mail: Air

Post File No:

Ottawa File No.	
50048-AF-40	
20	57

References

We have never received confirmation that the procedures outlined in the above referenced documents have been followed at your mission. However, we wish to remind you that these instructions are still in effect. We would, therefore, be interested to begin receiving again, on a regular biannual basis, your reports concerning this matter.

for Under-Secretary of State for External Affairs.

Internal Circulation

Distribution to Posts

Ext. 181B (Rev. 2/52)

Document disclosed under the *Access to Information Act*
Document divulgué en vertu de la *Loi sur l'accès à l'information*

DEPARTMENT OF EXTERNAL AFFAIRS

CROSS REFERENCE SHEET

Security Conf

50048-AF-40		
58	✓	✓

Type of Document Letter No. 1787 Date Dec 12/58

From Washington

To E.A.1

Subject: Destruction of Classified Waste

Original on File No. 50048-G-40

Copies on File No. 3607-40

Other Cross Reference Sheets on 50048-N-40

Prepared by N. Brown

Ext. 308

Document disclosed under the *Access to Information Act*
Document divulgué en vertu de la *Loi sur l'accès à l'information*

DEPARTMENT OF EXTERNAL AFFAIRS, CANADA. *(FILE COPY)*

NUMBERED LETTER

TO: The Permanent Mission of Canada to the United Nations, New York, N. Y.

FROM: THE UNDER-SECRETARY OF STATE FOR EXTERNAL AFFAIRS, OTTAWA, CANADA.

Reference:

Subject: Destruction of Classified Waste

CONFIDENTIAL

Security:

No: DS- 694

Date: December 18, 1958

-1-

Enclosures:

Air or Surface Mail: Air

Post File No:

Ottawa File No. ~~[illegible]-AF-40~~ 3607-40

20 | 50

References

Internal Circulation

Distribution to Posts: Washington

For some time we have been dissatisfied with the procedures followed in dealing with your classified waste. The method is not only clumsy and inefficient but also involves considerable inconvenience to Washington (to say nothing of the embarrassing use of British transport from New York to Washington). Heretofore, we have been unable to suggest a handy and more reasonable solution to this problem, considering New York City's special regulations regarding pulping or burning. However, a new machine for pulping waste has come to our attention called the "Pagar Disintegrator" (brochure attached) whose product is a semi-wet pulp disposable apparently in bag, box or can. This machine may be the answer to your problem if the advertising copy is to be believed.

2. We think it would be valuable if someone from the Department could witness a demonstration of the machine but there is none in operation within a reasonable distance of Ottawa. However, the manufacturers, Meili & Worthington Inc., 210 Bonair Ave., Hatboro, Pennsylvania (about 10 miles outside Philadelphia) have indicated that they would be pleased to give a complete demonstration of the machine.

3. We would appreciate it if you could arrange that someone from the mission be sent to Hatboro to see the Pagar in operation. We would, of course, be interested in your impressions of this machine and some kind of a report on its cleanliness, efficiency, ease of operation, whether special fittings are necessary, etc., as it might be the answer to the classified waste problem of other posts as well as your own.

Under-Secretary of State for External Affairs.

Ext. 181B (Rev. 2/52)

Document disclosed under the *Access to Information Act*
Document divulgué en vertu de la *Loi sur l'accès à l'information*

file: I. Clark / Dec. 17/58

Defence Liaison (2)/I. C. Clark/rjt

Mr. Timmerman

December 16, 1958

Mr. Clark

50048-AF-40
~~50048-G-40~~
Orig on 50048-G-40

Destruction of Classified Waste in New York

As you will see from the enclosed, Washington has answered our letter of November 26 in which we suggested that they should test or see a demonstration of the Pagar Disintegrator. They have also answered our query concerning the procedure wherebyNew York's waste, instead of being transmitted by Canadian courier from New York to Washington, is handed over to the U.K. Consulate-General for Transshipment via the British Embassy to Washington. In regard to the first point raised by Washington it would appear that if we wish to have a demonstration of this machine we should send someone from New York to Hatboro,Pennsylvania (incidentally you will note that Joy and I have found the missing letter and this address given us by Washington is the same as that contained in the letter). Should we in fact have such a person sent?

2. In regard to the second point raised in Washington's letter, you will note that by a Communications telegram No. SX-600 of October 6, new arrangements were made concerning the method of delivery of New York's waste to our post in Washington. This raises the point whether we should discreetly ask Communications to inform us of such changes in the future.

I. C. Clark.

Document disclosed under the Access to Information Act
Document divulgué en vertu de la Loi sur l'accès à l'information

DEPARTMENT OF EXTERNAL AFFAIRS, CANADA. (FILE COPY)

NUMBERED LETTER

TO: Canadian Embassy, Washington, D. C.

FROM: THE UNDER-SECRETARY OF STATE FOR EXTERNAL AFFAIRS, OTTAWA, CANADA.

Reference: Your Letter 1632 of November 10

Subject: Destruction of Classified Waste

CONFIDENTIAL

Security: DS- 1062

No:

Date: November 26, 1958

Enclosures: 1

Air or Surface Mail: Air

Post File No: 7

Ottawa File No 50048-G-40
50048-N-40; 3607-40
50048-AF-40

70	50

References

Internal Circulation

Distribution to Posts

We agree that the method presently being followed for destroying New York's waste is both clumsy and inefficient, and judging by the truck incident, potentially dangerous, but heretofore we have not been able to offer a handy and more reasonable solution to the disposal problem. However, a new machine for pulping waste has come to our attention called the "Pagar Disintegrator" (brochure attached) whose waste product is a semi-wet pulp, disposable, apparently, in bag, box or can. This machine may be the answer to New York's problems if the advertising copy is to be believed.

2. We think it would be valuable if someone from the Department could witness a demonstration of the machine, but there is none in operation within a reasonable distance of New York or Ottawa so far as we know. However, we understand that the Portuguese Embassy in Washington is presently using a "Pagar" for destruction of waste and we would appreciate it if you could arrange that someone from the mission be allowed to see the machine in operation there. At the same time, pertinent information as to the Pagar's cleanliness, efficiency, ease of operation, whether special fittings are necessary, etc., could be gathered.

3. We appreciate that you may not wish to bother the Portuguese Embassy in this way, but we offer this suggestion as a quick means of discovering whether the Pagar Disintegrator is a matter worth pursuing so as to relieve you from the present inconvenience of destroying New York's waste as soon as possible.

4. Incidentally we do not seem to have a record of the change in procedure whereby waste, instead of being transmitted by Canadian courier from New York to Washington, is handed over to the U.K. Consulate General for trans-shipment via the British Embassy to you. Our last reference seems to be your letter 1115 of 13 August 1957 referring to our DS-404 of 9 April 1957. If there has been some further reference to it would you please give us the particulars in your reply.

Under-Secretary of State
for External Affairs.

Ext. 181B (Rev. 2/52)

Document disclosed under the Access to Information Act
Document divulgué en vertu de la Loi sur l'accès à l'information

DEPARTMENT OF EXTERNAL AFFAIRS

MEMORANDUM

TO: DEFENCE LIAISON (2) DIVISION

FROM: Finance Division

REFERENCE:

SUBJECT: Purchase of keys for office doors

Security

Date November 4, 1958

File No. 50048-AF-40

70

AF

The attached copies of vouchers 65 and 93 relate to the purchase of keys for office doors. They are sent to you for your information and necessary action:

Permanent Mission to the U.N., New York

Vouchers 65 and 93 - August 1958 account

CIRCULATION

O.K.

Finance Division.

Ext. 326 (6/56)

Document disclosed under the *Access to Information Act*
Document divulgué en vertu de la *Loi sur l'accès à l'information*

65

DEPARTMENT OF EXTERNAL

VOUCHER

PERMANENT MISSION OF CANADA TO THE UNITED NATIONS

August 19,1958.

CROSS AND BROWN COMPANY: AGENT

Date	Bill No.	Details	Amount
May 20,1958.	D-1855	4 Keys @ $0.35	1.40
June 13,1958.	D-1968	8 Keys @ $0.35	2,80
		Total.....	4.20

RECEIVED PAYMENT FROM CROSS & BROWN COMPANY
AUGUST 19,1958.
vote 313-14-201 EA. 30643A 39.14

Signature.....

Document disclosed under the *Access to Information Act*
Document divulgué en vertu de la *Loi sur l'accès à l'information*

93

DEPARTMENT OF EXTERNAL AFFAIRS

VOUCHER

PERMANENT MISSION FOR CANADA TO UNITED NATIONS

32 Keys @ $0.25 Total.....8.00

RECEIVED PAYMENT FROM ADOLPH'S LOCKSMITH SERVICE
695-3rd Ave.,
New York U.S.A.

Document disclosed under the *Access to Information Act*
Document divulgué en vertu de la *Loi sur l'accès à l'information*

DEPARTMENT OF EXTERNAL AFFAIRS

MEMORANDUM

TO: Defence Liaison (2) Division

FROM: Finance Division

REFERENCE:

SUBJECT: Keys for Official Residence.

Security: Unclassified

Date: October 30, 1958

File No. 5004f-AF-40

The attached copy of voucher 3 relates to the purchase of one key for the official residence. It is sent to you for your information and necessary action:

Permanent Mission to the U.N. New York -N.Y.
Petty Cash Voucher 3 - July 1958 Account.

Not a security lock - OK - for filing
Odb
Nov 5/58

G S Stewart
Finance Division.

CIRCULATION

Ext. 326 (6/56)

Document disclosed under the *Access to Information Act*
Document divulgué en vertu de la *Loi sur l'accès à l'information*

Copy of Voucher 3

July 11, 1958

Key for Official Residence .41¢

Document disclosed under the *Access to Information Act*
Document divulgué en vertu de la *Loi sur l'accès à l'information*

DEPARTMENT OF EXTERNAL AFFAIRS

MEMORANDUM

TO: DEFENCE LIAISON (2) DIVISION

FROM: Finance Division

REFERENCE:

SUBJECT: Repairs to door lock

Security

Date September 29, 1958

File No. 50048-AF-40

58	—	—

The attached copy of voucher 66 relates to the repair of the lock on the rear door of the office.

It is sent to you for your information and necessary action.

The Permanent Mission of Canada to the United Nations, New York, N.Y.

Voucher 66 - May 1958

CIRCULATION

Note in Dept'l. Security Log
Initialed
CDD
1/10/59
Pls Draft

Finance Division.

Ext. 326 (6/56)

Document disclosed under the *Access to Information Act*
Document divulgué en vertu de la *Loi sur l'accès à l'information*

Copy of Voucher 66

Empire Locksmiths Inc.
686 Third Avenue, New York

Sold to - Canadian Mission to the U.N.

1	Lock opened on rear door to office	$6.50
1	Large key ring	.55
1	key clip	.25
		$7.30

Document disclosed under the *Access to Information Act*
Document divulgué en vertu de la *Loi sur l'accès à l'information*

Confidential.

Ottawa, Aug. 20th. 1958

FROM: THE DEPARTMENT OF EXTERNAL AFFAIRS, CANADA

TO: THE CANADIAN PERMANENT DELEGATION TO THE NORTH ATLANTIC COUNCIL, PARIS, FRANCE.

We are forwarding by (Crosses Sea Bag - Via Canada House London. 726 Aug 21) the following:-

TWENTY (20) SARGENT & GREENLEAF COMBINATION PADLOCKS TYPE #8088 all of these are on the manufacturer's setting.

Please refer to our letter No. DS132 of February 26, 1958.

(22 of these padlocks went forward in the last crossed Sea Bag) the above lot completes the issue of 42)

When the above has been received and checked, would you kindly sign and return the original form Ext. 27 R.

Notified Cat 7/10/58

L. A. H. SMITH
Under-Secretary of State
for External Affairs

Attention: C. d'Ornano, D. L. 2, Rm. 251 E. Bl.

This is to certify that the above mentioned items have been received in good order.

Place _____ Date Sept 9th 1958 _____ Signature _____

Ext. 27 R (Rev. 2/53)

Document disclosed under the *Access to Information Act*
Document divulgué en vertu de la *Loi sur l'accès à l'information*

1950 OCT 6 PM 3:16

Document disclosed under the *Access to Information Act*
Document divulgué en vertu de la *Loi sur l'accès à l'information*

50048 - B-40

Confidential.

Ottawa, August 14, 1958

FROM: THE DEPARTMENT OF EXTERNAL AFFAIRS, CANADA

TO: ~~THE CANADIAN EMBASSY, PARIS, FRANCE.~~
Permanent Delegation, NATO

726 via Canada House Aug 21

We are forwarding by (CROSSED SEA BAG) the following:-

TWENTY TWO (22) SARGENT & GREENLEAF COMBINATION PADLOCKS
TYPE # 8088 (all set on manufacturer's setting
10 - 20 - 30)

Please refer to our letter No. DS-132 of February 26, 1958

(Note balance of 22 padlocks going forward in the next crossed sea bag)

When the above has been received and checked, would you kindly sign and return the original form Ext. 27 R.

Notified copy
Oct 7/10/58 Pls Ret.
J. E. Reagan

Under-Secretary of State
for for External Affairs

Attention: C. d'Ornano, D. L. 2, Rm. 251 E. Bl.

This is to certify that the above mentioned items have been received in good order.

Canadian Embassy Paris	Sept 9th 1958	R. Latreille
Place	Date	Signature

Ext. 27 R (Rev. 2/53)

Document disclosed under the Access to Information Act
Document divulgué en vertu de la Loi sur l'accès à l'information

D.L.C/F.E.Reyes/rjc

DEPARTMENT OF EXTERNAL AFFAIRS, CANADA. *(FILE COPY)*

NUMBERED LETTER

TO: The Permanent Mission of Canada to the United Nations, New York

FROM: THE UNDER-SECRETARY OF STATE FOR EXTERNAL AFFAIRS, OTTAWA, CANADA.

Reference: Your Letter No. 492 of July 2, 1958 and our Letter DS-249 of April 25, 1958

Subject: Security Locks

Security: RESTRICTED

No: DS-431

Date: August 1, 1958

Enclosures: -

Air or Surface Mail: Air

Post File No:

Ottawa File No.	
50048-AF-40	
70	50

References

We are sending by bag the remainder of the Yale locks required for your post.

2. The positions Nos. 20, 19, 8 and 6 mentioned in our letter of April 25 are the door numbers. These correspond to the following rooms.

No. 20 - door to the conference room from the kitchen;
No. 19 - door to the kitchen;
No. 8 - Office No. 1;
No. 6 - storage room door.

3. The tool kit mentioned in paragraph 3 of your letter was sent out on May 21, 1958 and, according to our records, was received by security guard F. L. Hammond whose signature appears on our copy of form Ext.27R. If you do not have the tool kit on hand let us know so that we may take appropriate action.

Internal Circulation

A. F. HART

Under-Secretary of State for External Affairs.

Distribution to Posts

99

Ext. 181B (Rev. 2/52)

Document divulgué en vertu de la Loi sur l'accès à l'information
Document divulgué en vertu de la Loi

50048-AF-40
43

cc. C. D'Ornano, Rm. 251, E.B.
F.E.Keyes, Rm. 251, E.B.
Reference Registry, Rm. 335, E.B.

File 50048-AF-40

CONFIDENTIAL

Ottawa, July 28, 1958

FROM: THE DEPARTMENT OF EXTERNAL AFFAIRS, CANADA

TO: The Canadian Delegation to the United Nations, New York

July 29

98

We are forwarding by ( ) the following:-

12 Yale 0-48-1
1 Yale 197
1 Yale 197½
2 keys each

Reference Our Letter No. DS-249 of April 25, 1958

When the above has been received and checked, would you kindly sign and return the original form Ext. 27 R.

Under-Secretary of State
for External Affairs

Attn C. D'Ornano, Rm. 251, E.B.

This is to certify that the above mentioned items have been received in good order.

Place

Date

Signature

Ext. 27 R (Rev. 2/53)

Document disclosed under the *Access to Information Act*
Document divulgué en vertu de la *Loi sur l'accès à l'information*

DEPARTMENT OF EXTERNAL AFFAIRS, CANADA. File GK 25-7

NUMBERED LETTER

TO: THE UNDER-SECRETARY OF STATE FOR EXTERNAL AFFAIRS, OTTAWA, CANADA.

FROM: Permanent Mission of Canada to the United Nations, New York

Reference: Your letter DS-249 of April 25/58

Subject: Security locks.

J-15

Security: RESTRICTED

No: 492

Date: July 2, 1958

Enclosures:

Air or Surface Mail: courier

Post File No: 4.

Ottawa File No.	
50048-AF-40	
20	50

References

D 2

1
2
3
4
5
6
7
8
9
10

JUL 4 1958

Internal Circulation

D

Distribution to Posts

Following a recent inspection of security locks installed at the Mission, it was found that one of the two 197¼ locks had been installed in error on the passage door leading to the security area. It cannot, of course, be removed. Would it be possible for you to forward an additional 197¼ lock in order that it be installed on the line room door in accordance with your instructions?

2. With regard to the installation of five 197 locks, we should be grateful if you would clarify for us which offices are covered in your numbering of rooms 20, 19, 8 and 6. This type of lock is already installed on the emergency door between the stenographers' room and the main corridor as well as on the storage room in the sub-basement. We should also like to install one on the storage room door leading into the stenographers' room.

3. We should be grateful if a tool kit could be forwarded at your convenience.

4. A full report on security arrangements at the Mission will be forwarded shortly by the Security Officer.

J. H. Halstead
Permanent Mission.

~~Mr. Hayes~~
- for a ltr.

KAHay 7/58

1963 JUL 3 PM 5:04

door 20 - to corridor from kitchen
" 19 door to kitchen
" 8 office #1
" 6 storage room

Ext. 182A (Rev. 2/52)

Document disclosed under the *Access to Information Act*
Document divulgué en vertu de la *Loi sur l'accès à l'information*

1958 JUL 3 PM-2 04 NO ENCLOSURES

Document disclosed under the *Access to Information Act*
Document divulgué en vertu de la *Loi sur l'accès à l'information*

Ottawa, June 2, 1958

FROM: THE DEPARTMENT OF EXTERNAL AFFAIRS, CANADA

TO: THE CANADIAN PERMANENT MISSION, NEW YORK, N. Y. U. S. A.

We are forwarding by (Courier 75) the following:-

400 Sheets Log Sheet page GQ - 50 Sheets of Log Sheet page 3.

As requested in your telegram to External 796, Ma7 27, 1958.

When the above has been received and checked, would you kindly sign and return the original form Ext. 27 R.

Under-Secretary of State
for for External Affairs

Attention: C. d'Ornano, D. L. 2, Rm. 251 East Block.

This is to certify that the above mentioned items have been received in good order.

Place N.Y. June 6/58 Date Signature

Ext. 27 R (Rev. 2/53)

Document disclosed under the Access to Information Act
Document divulgué en vertu de la Loi sur l'accès à l'information

Defence Liaison (2)/J. Timmerman/ptt

FILE COPY

Supplies & Properties Division

50048-AF-40
70

Unclassified

June 2, 1958

Defence Liaison (2) Division

Orig on — ~~5100-C-1-40~~ F
50048-AF-40

PERMIS New York Letter No. 388 of 20 May 1958

Security Arrangements

I discussed with Miss Gagnon the attached letter on Friday afternoon. She confirmed that the figures shown in the last column of its accompanying appendix related to additional requirements. She agreed that the two five-drawer cabinets now without bars, hasps and locks could be used for the storage of unclassified material and that temporary offices should be equipped with security shells and enclosures.

2. I suggested that 12 additional security cabinets to replace the six that were discarded plus three for temporary offices, a total of nine, might be somewhat extravagant. It was agreed that we should supply them if possible with six security shells and enclosures immediately and follow this up with three similar cabinets later.

3. You may wish to consider the desirability of having New York purchase enclosures locally.

Defence Liaison (2) Division

Document disclosed under the *Access to Information Act*
Document divulgué en vertu de la *Loi sur l'accès à l'information*

ACTION COPY

139 | 9

50048-AF-40

To: Johnson
MAY 27 1958
To: Young

FM PERMISNY MAY27/58 UNCLAS
TO EXTERNAL PRIORITY
796

SECURITY GUARD LOG

WE SHOULD BE GRATEFUL TO RECEIVE AS SOON AS POSSIBLE A YEAR'S SUPPLY OF PAGE GQ OF THE SECURITY GUARD LOG SHEETS PRODUCED IN THE DEPT. IN ADDITION TO THIS WE SHOULD BE GRATEFUL FOR 50 SHEETS OF PAGE 3. EVENTS DURING THE NIGHT ATTHE MISSION ARE NOT RPT NOT SO NUMEROUS AS TO WARRANT PAGE 3 EVERY DAY.

2. WE HAVE ON HAND A TWO WEEKS' SUPPLY OF THESE LOGS AND SHOULD BE GRATEFUL TO RECEIVE THE SHEETS REQUESTED BEFORE OUR PRESENT STOCK IS EXHAUSTED.

BT
GR80
271740Z

NNNN

000185

Document disclosed under the *Access to Information Act*
Document divulgué en vertu de la *Loi sur l'accès à l'information*

50048-AF-10
43 | 0

CONFIDENTIAL

Ottawa, May 21, 1958

FROM: THE DEPARTMENT OF EXTERNAL AFFAIRS, CANADA

TO: THE CANADIAN PERMANENT MISSION, NEW YORK N Y, U.S.A.

We are forwarding by (Courier 62) the following:- May 22

One Tool Box containing the following:

- 1 Oilstone #108
- 1 Set of high speed drills
- 1 Ratchet brace #140
- 1 expansive bit.
- 1 hand drill #1220
- 1 12" hacksaw frame.
- 1 nest saws #725
- 1 oilcan valvespout
- 1 6' tape measure
- 1 4 oz. hammer
- 1 6" pliers, square nose.
- 1 4" pliers #84
- 1 table vise
- 1 set number dies
- 1 set letter dies
- 1 6" warding file
- 1 10" mill file
- 2 hacksaw blades
- 1 4cx400 screw driver
- 1 6" screw driver
- 1 12" " "
- 1 1/2" driver bit
- 1 set pin punches
- 1 centre punch
- 1 3/8 inch wood chisel } , handle.
- 1 3/4 " " "
- 1 6" crescent wrench
- 1 10" " "
- 1 5/16" J. B. wrench
- 1 large file handle
- 1 small file handle
- 1 tube graphite
- 2 tubes lubriplate
- 1 tool box
- 1 padlock

When the above has been received and checked, would you kindly sign and return the original form Ext. 27 R.

(5 items missing from the regular list of tools are now on order and will be forwarded later.)

Under-Secretary of State
for External Affairs

Attention: C. d'Ornano, D. L. 2, Rm. 251 East Block.

This is to certify that the above mentioned items have been received in good order.

N.Y.C. N.Y.	May 26-58.	L. L. Hammond
Place	Date	Signature

Ext. 27 R (Rev. 2/53)

Document disclosed under the Access to Information Act
Document divulgué en vertu de la Loi sur l'accès à l'information

DEPARTMENT OF EXTERNAL AFFAIRS, CANADA. *(FILE COPY)*

NUMBERED LETTER

TO: The Permanent Mission of Canada to the United Nations, New York

FROM: THE UNDER-SECRETARY OF STATE FOR EXTERNAL AFFAIRS, OTTAWA, CANADA.

Reference: Your Telegram 740 of May 15

Subject: Hours of Security Guards

Security: CONFIDENTIAL

No: DS-292

Date: May 21, 1958

Enclosures: -

Air or Surface Mail: Air

Post File No:

Ottawa File No.	
50048-AF-40 9118-E-40	
43	50

References

Internal Circulation

Personnel Est. & Org.

Distribution to Posts

We regret to say that we are as anxious as you to know exactly what constitutes the normal work week of guards abroad. For some time we have been pressing both to get an answer to your question and to obtain permission to pay guards for overtime at posts abroad. As you will realize, if one of the guards at a three-guard post becomes sick or goes on leave, the other two guards have to fill in and consequently accumulate overtime credits. If either of them, in turn, attempt to take this overtime in leave, the other two guards have to fill in and a vicious circle is set up.

2. We are, therefore, trying to get the whole matter clarified. The present position might best be described as a three-cornered dogfight between this Department, the Civil Service Commission and the Treasury Board. The questions of normal hours and compensation for overtime are intertwined and will have to be solved together. We have, however, made some progress and are hoping for an early answer.

3. In the meantime, all we can say is that we tell guards that they are expected to work up to a 48 hour week when abroad without accumulating overtime. At a post such as yours where guards will be on duty from approximately 1700 hours to 0900 hours during weekdays, and for the entire two days of the weekend, there are 128 hours to be covered. This means each guard works approximately 43 hours a week.

J. E. [illegible]
Under-Secretary of State
for External Affairs.

Ext. 181B (Rev. 2/52)

Document disclosed under the *Access to Information Act*
Document divulgué en vertu de la *Loi sur l'accès à l'information*

DEPARTMENT OF EXTERNAL AFFAIRS, CANADA. *(DUPLICATE)*

NUMBERED LETTER

TO: THE UNDER-SECRETARY OF STATE FOR EXTERNAL AFFAIRS, OTTAWA, CANADA.

FROM: Permanent Mission of Canada to the United Nations, New York

Reference:

Subject: Office Equipment - 750 Third Avenue.

Security: Unclassified

No: 388

Date: May 20, 1958

Enclosures: x

Air or Surface Mail: Surface

Post File No: 2-3

Ottawa File No. 50048-AF-40

70 —

References

Onyon 5100-C-1-40

Enclosed is a list of safes and filing cabinets now in use at the Mission and our recommendations for their allocation or disposal.

2. You will note that every effort has been made to utilize as many of our old filing cabinets as possible. Registry will require eight replacements; it was felt that three of these should be allocated to the offices of Messrs. Murray, Hadwen and Arnould, in keeping with their new furniture, while the ones now in use by them could be transferred to Registry. Miss Gagnon formerly shared Mr. Mathieu's filing cabinet and will require one of her own.

3. With regard to the requirements of the two temporary offices, you may, perhaps, wish us to look into the possibility of purchasing locally two cabinets of a cheaper model than that normally used.

Internal Circulation

G. S. MURRAY
Permanent Mission.

Distribution to Posts

(Ext. 182C(Rev. 2/52)

Document disclosed under the *Access to Information Act*
Document divulgué en vertu de la *Loi sur l'accès à l'information*

LIST OF FILING CABINETS

OFFICE	ON HAND	ALLOCATION	TO BE DISCARDED	REASON	REQUIREMENTS
Registry	1 Taylor Safe (Consulate)	Registry			
	2 Preston safe files	Registry			
	6 4-drawer cabinets (3 with bar and lock, 1 without)	4 - Registry	2	T.&C. hand me downs. Do not function properly	5 - Registry 1 - Murray 1 - Hadwen 1 - Arnould
	6 5-drawer cabinets (4 with bar and lock, 2 without)	3 - Registry 3 - Temporary Offices			2 bars and locks
	3 4-drawer wooden cabinets		3	Not fire-proof; should not be used.	
Mr.Murray	1 4-drawer cabinet with bar & lock	Registry			
Mr.Hadwen	1 4-drawer cabinet with bar & lock	Registry			
Mr. Arnould	1 4-drawer cabinet with bar & lock	Registry			
Mr.Mathieu	1 4-drawer cabinet with bar & lock		1	Does not function properly; file guard broken	1
Miss Bruer	1 Remington Rand safe file	Miss Bruer			
Steno No.1	1 4-drawer filing cabinet with bar	Steno No.1			
Miss Gagnon	None				1
Steno 2	"				1
Temporary Office 9	"				1

Document disclosed under the *Access to Information Act*
Document divulgué en vertu de la *Loi sur l'accès à l'information*

50098-AF-10
43
Orig 9118-E

FM PERMISNY MAY15/58 CONFD
TO EXTERNAL 740 PRIORITY

REF YOURLET DS155 MAR5

SECURITY HOURS OF GUARDS

THE ATTACHMENT TO YOURLET DS155 PARA4 SECTION(F)SUBSECTION(I) STATES THAT GUARDS SHOULD NOT RPT NOT WORK MORE THAN 48 HOURS PER WEEK.WE RECALL A DIRECTIVE FROM THE SECRETARY OF STATE ANNOUNCING THAT ALL CIVIL SERVANTS OTHER THAN THOSE WORKING AT AN HOURLY RATE WOULD ADHERE TO THE BASIC CIVIL SERIVICE HOURS,37 1/2 HOURS PER WEEK.WE WOULD BE GRATEFUL IF YOU WOULD CLARIFY WORK REQUIREMENT FOR SECURITY GUARDS IN LIGHT OF THE FOREGOING AND DEPT EXPERIENCE ELSEWHERE.

Document disclosed under the *Access to Information Act*
Document divulgué en vertu de la *Loi sur l'accès à l'information*

Defence Liaison (2) Division/J.Zimmerman/rjt

FILE COPY

Supplies & Properties Division - Attention Mr. Hunter

May 12, 1958

Defence Liaison (2) Division

50048-N-40
50048-AF-40
43 —

Security Equipment for New York

Last week we sent you a New York letter dealing with the disposition of their security equipment consequent upon the impending move to new premises of both the Consulate and the Permanent Delegation. In our covering memorandum we pointed out that the elevator in Canada House would take the weight neither of a Taylor 221 or 222 special safe. We suggested that their two 222 safes be returned to the Department and that the Consulate be supplied with a 220C model Taylor safe for its use in lieu of the 222 which it had been using.

3. We have since examined the matter further and are convinced that something better and bigger than a 220C model safe is required. We recommend, therefore, that you arrange with the J.J.Taylor Safe Company of Toronto to supply New York with their standard model 222 Taylor safe equipped with Sargent & Greenleaf "T" model combination lock and a built-in model 151 jeweller's chest also fitted with a Sargent & Greenleaf "T" model lock. The total weight of the safe with built-in jeweller's chest (which incidentally is large enough to take one row of our standard file folders lying flat) will not exceed 1600 lbs., a weight which the Canada House elevator will comfortably handle. However, this last point should be confirmed by Taylors before a definite order is placed.

Defence Liaison (2) Division

Document disclosed under the *Access to Information Act*
Document divulgué en vertu de la *Loi sur l'accès à l'information*

DEPARTMENT OF EXTERNAL AFFAIRS

CROSS REFERENCE SHEET

Security CONFIDENTIAL

50048-AF-40		
43		

Type of Document Memo No. Date May 9/58

From W.L.(2)

To Supplies & Properties Div

Subject: Letter No. 259 of April 13. from Consulate - Geneva, New York.
Security Contains.

Original on File No. 50048-N-40

Copies on File No.

Other Cross Reference Sheets on

Prepared by

Ext. 308

Document disclosed under the Access to Information Act
Document divulgué en vertu de la *Loi sur l'accès à l'information*

D.L.S. (D) C. Timmerman/ss

DEPARTMENT OF EXTERNAL AFFAIRS, CANADA *(FILE COPY)*

File 9K 25-1

NUMBERED LETTER

TO: Permanent Mission of Canada to the United Nations, New York

FROM: THE UNDER-SECRETARY OF STATE FOR EXTERNAL AFFAIRS, OTTAWA, CANADA.

Reference: Telephone Conversation between Miss Gagnon and Mr. Timmerman of today

Subject: Security Locks

Security: RESTRICTED

No: DS-249

Date: April 25, 1958

Enclosures:

Air or Surface Mail: Air

Post File No:

Ottawa File No. 50048-AF-40
50048-Af-40

4.3 | 50

References

As requested we are sending by bag two Yale 197¼ locks, five Yale 197 locks and ten Yale 0-48-1 locks, with two keys each.

2. We suggest, in this emergency, that you have any extra keys which are urgently required made by a reputable local locksmith.

3. Unfortunately we were not able to secure the full number of 0-48-1 locks and we hope to obtain the balance within the next day or two and shall send them along as soon as possible. Meanwhile, we suggest that you instal 197¼ locks on the main entrance door and the door to the line room, and the five 197 locks on rooms 20, 19, 18, 6 and the new emergency door which we understand is being installed between the stenographers' room and the main corridor. The ~~tenv~~0-48-1 locks we think should be disposed of as follows:-

On Room 26 (the mail room).
On door 23 leading to corridor 3.
On the two doors leading to the Head of Mission's office.
On the Minister's office.
On offices 2 to 5, inclusive.
On the stenographers' room.

Internal Circulation

Supplies & Properties

4. It will be in order for you to have these locks installed by the contractor or a reputable local workman.

5. We are making up a tool kit and will send it along for use by the guards as soon as possible.

NOTE:
TO GO:
0-48-1.
FOR. PSNS: 25
24
30
22
15
32
8
5
4
3
2.

PLUS. SPARES
(0-48-1, 197, & 197¼)

12-048-1

Under-Secretary of State for External Affairs

Distribution to Posts

Ext. 181B (Rev. 2/52)

Document disclosed under the *Access to Information Act*
Document divulgué en vertu de la *Loi sur l'accès à l'information*

50048-AF-40
20 | U

CONFIDENTIAL

J-14

Ottawa, April 25, 1958

FROM: THE DEPARTMENT OF EXTERNAL AFFAIRS, CANADA

TO: THE CANADIAN PERMANENT DELEGATION TO THE UNITED NATIONS, NEW YORK, N. Y., U. S. A.

We are forwarding by (COURIER) the following:-

TWO (2) YALE #197¼ DROP BAR BOLT KEY OPERATED DEADLOCKS with two (2) keys each, Nos. 11A205, 13A530.

FIVE (5) YALE #197 DROP BAR BOLT, KNOB OPERATED DEADLOCKS with two keys each, Nos. 12A266, 7A729, 11A480, 5A330, 7A338.

TEN (10) YALE #048 RIM DEADLATCHES, with two keys each, Nos. 23A375, 10A744, 6A073, 4A011, 3A602, 22A689, 4A849, 5A635, 3A508, 23A719.

Please refer to our letter No. DS 249, of April 25, 1958

D2

1
2
3
4
5
6
7
8
9
10

APR 29 1958

When the above has been received and checked, would you kindly sign and return the original form Ext. 27 R.

Note to 30/4/58 Please file

Under-Secretary of State for External Affairs

Attention: C. d'Ornano, DL 2, Rm. 251. E.B.

This is to certify that the above mentioned items have been received in good order.

PERMANENT MISSION OF CANADA U.N. NEW YORK

Place	April 28/58 Date	Signature

Ext. 27 R (Rev. 2/53)

Document disclosed under the Access to Information Act
Document divulgué en vertu de la Loi sur l'accès à l'information

DEPARTMENT OF EXTERNAL AFFAIRS, CANADA. (DUPLICATE)

NUMBERED LETTER

TO: THE UNDER-SECRETARY OF STATE FOR EXTERNAL AFFAIRS, OTTAWA, CANADA.

FROM: CONSULATE GENERAL OF CANADA, NEW YORK.

Reference: Your Letter DS-316 of June 4, 1957.

Subject: Security Containers

Security: CONFIDENTIAL

No: 259

Date: April 13, 1958.

Enclosures:

Air or Surface Mail: Courier

Post File No:

Ottawa File No. 50048-AF-40

70

Orig. on 50048-N-40

References

Internal Circulation

Distribution to Posts

The reply to your letter under reference was withheld pending decisions on the reallocation of the Missions in New York.

2. Now, it has been finally decided that the Consulate General is to move to Canada House, 680 Fifth Avenue, and the Permanent Mission to the United Nations is to move to 750 Third Avenue, we can provide you with the information required as to the security containers on hand and the use to which they will be put in the new accommodation.

Consulate General

Item	Description	Use	Location
1 Taylor 222	Special safe	Secret material combinations, etc.	Registry Room 921, Canada House
1 Taylor 221	Special safe	Surplus	Storage room Sub-basement Canada House
1 Dominion safe file	Enclosure cabinet Sargent & Greenleaf combination lock	Consular records passports, etc.	Room 809, Canada House
1 Dominion safe	Approx. 1500 lbs. safe on casters outside measurements width 23", height 58", depth 25", one shelf, Sargent & Greenleaf combination lock	Courier bags spare keys, etc.	Room 921 Canada House
1 T.H.S. safe	Approx. 500 lbs. on casters, width 19", height 31", depth 22", T.H.S. combination lock, (formerly T. & C. inventory)	Petty cash, stamps, etc.	Room 920, Canada House

.....

(Ext. 182C(Rev. 2/52)

Document disclosed under the *Access to Information Act*
Document divulgué en vertu de la *Loi sur l'accès à l'information*

Consulate General (cont'd)

Item	Description	Use	Location
1 Herring-Hale Marvin safe	Obsolete - made in 1910, portable vault safe, Yale combination lock, Weight approx. 600 lbs. width 27", height 56", depth 26". Not rated for fire protection by Standard Underwriters Laboratories. Acquired from the High Commissioner's Office, Newfoundland.	For disposal. York Safe Co., offered us $35.00.	Store room, sub-basement Rockefeller Center.
1 Herring-Hale Marvin safe made in 1865.	Weight approx. 8000 lbs. width 71", height 54", depth 30", double door.	Left behind by former tenant. No commercial value. Will cost us approx. $150. to move. We intend to leave it behind, if possible.	Now in the store room sub-basement Rockefeller Center. If not forced to move it, we shall leave behind.

Permanent Mission - 750 Third Avenue

1 Taylor 222	Special safe	Special classified material, combinations, etc.	Registry 750 Third Ave

Communications Centre - Permanent Mission - 750 Third Avenue

1 Chubb	Safe file Sargent & Greenleaf combination lock.	Classified material	Communication Room.
3 Taylor safe filing cabinets	Special communications equipment - Sargent & Greenleaf combination lock.	Classified material and tapes	Communication Room.

3. The above list of equipment includes only heavy security containers with the exception of the Dominion Safe file for Consular Section in Canada House and shows the use and proposed location in the new accommodation of each. A separate letter from each of the Consulate General and Permanent Mission dealing with our present complement of filing cabinets and safe file together with our requirements in the new locations will be forwarded.

..... 3

Document disclosed under the *Access to Information Act*
Document divulgué en vertu de la *Loi sur l'accès à l'information*

4. The Special 221 Taylor Safe which will be stored temporarily in the sub-basement store room of Canada House is surplus to our establishment and we should appreciate your instructions on its disposal presumably to ship it back to Ottawa or another of our posts abroad.

5. It will be noted that we have shown the present location of the two Herring-Hale Marvin safes and it is hoped that we will receive instructions from you for the disposal of the small one and that we can work out the disposal on the large one before the move to Canada House.

Original Signed by
R. K. HENRY

CONSULATE GENERAL

Document disclosed under the Access to Information Act
Document divulgué en vertu de la Loi sur l'accès à l'information

Personnel Div. G.L. Thompson, KC

Mr Smith to see
& File

DEPARTMENT OF EXTERNAL AFFAIRS, CANADA

(DUPLICATE)

File on 50048-AF-40 part 1 6/4

NUMBERED LETTER

The Permanent Representative of Canada to the

Restricted

To: United Nations, New York, N.Y.

Security: P-224

No.: April 10, 1958

Date:

From: THE UNDER-SECRETARY OF STATE FOR EXTERNAL AFFAIRS, OTTAWA, CANADA.
Your Telegram No. 452 of March 20

Enclosures:

Reference: Locally-engaged Staff - Receptionist-

Air or Surface Mail:

Subject: telephonist

Post File No.:

Ottawa File No.
~~10607-2-14-40~~
50048-AF-40

43

References

At the time of the Departmental supplementary review of estimates we intend to request for your post the addition of a local position of receptionist-telephonist at the Assistant Grade 7 level. As we still do not know when this review will take place and we understand that you will be moving to your new offices about April 30, you are hereby authorized to engage a receptionist-telephonist on an emergency basis under Section 149.11.1 of the Departmental Regulations and Instructions. Before hiring a local employee, she should, of course, be given a character check by the United States authorities. As mentioned in our letter P-138 of February 26, such a local employee may not have access to classified material.

2. If a new local position is authorized for your establishment, the person whom you hire on an emergency basis may be appointed to this position without a break in her service (see Section 149.11.4 of the Regulations).

Internal Circulation

Defence Liaison (2) Div.
Mr. J.A. Colvin)
Mr. E.Woodyard)
Miss C. Gillies)
Personnel Div.
C.T.O.

B.M. WILLIAMS

Under-Secretary of State for External Affairs.

Distribution to Posts

Ext. 181C (Rev. 2/52)

Document disclosed under the Access to Information Act
Document divulgué en vertu de la Loi sur l'accès à l'information

DSU, (2)/11 A.H. Smith/ss

DEPARTMENT OF EXTERNAL AFFAIRS, CANADA. *(FILE COPY)*

NUMBERED LETTER

TO: The Permanent Mission of Canada to the United Nations, New York

FROM: THE UNDER-SECRETARY OF STATE FOR EXTERNAL AFFAIRS, OTTAWA, CANADA.

Reference: Your Letter No. 288 of April 9, 1958

Subject: Security Arrangements at 750 Third Avenue

Security: CONFIDENTIAL

No: DS-225

Date: April 9, 1958

Enclosures:

Air or Surface Mail: Air

Post File No: 4

Ottawa File No. 50048-AF-40 ~~50048-AN-40~~

43 | 50

References

The three security guards whom we will be sending to you are Mr. F.L. Hammond, Mr. H.D. Logan and probably Mr. ~~H.S. Slater.~~ L. Lecuyer They joined the Department on April 9, 1956, November 19, 1957 and October 17, 1957 respectively. Mr. Hammond and Mr. Slater have both served abroad as security guards at international conferences and all three have had considerable training not only in our course but also through their general work since joining the Department. We hope, therefore, that you should have no worries concerning the experience of the guards in the repair and maintenance of locks and concerning their knowledge of the duties they will be expected to perform.

2. Mr. Hammond has been serving as Senior Guard in Ottawa for some time and we would like him to continue in that position at New York. We agree in this case that it would not be advisable to rotate the position. There is no compensation for the Senior Guard other than the inducement of possible promotion.

J. TIMMERMAN

Under-Secretary of State for External Affairs

Internal Circulation

Personnel

Done 11/4/58 SS.

Distribution to Posts

Ext. 181B (Rev. 2/52)

Document disclosed under the Access to Information Act
Document divulgué en vertu de la Loi sur l'accès à l'information

D.L. (2)/L.A.H. Smith/ss

restricted

March 28, 1958

Personnel Division

(Attention: Miss L. Thompson)

Defence Liaison (2) Division

Letter No. 151 of February 12, 1958 from the Permanent Mission, New York

Reception Duties - 750 Third Avenue

50048-AF-40

43

On strictly security grounds, we would of course prefer that all employees at posts abroad should be Canadian personnel. Nevertheless, we realize that there are many practical and financial reasons why it becomes necessary to employ local staff. In the case of a receptionist-switchboard operator for the new offices of the Permanent Mission in New York, we are prepared to approve the engagement of a local employee, if you should so prefer, and provided she would be given the normal character check by the U.S. authorities.

2. Our decision is based on the following considerations:-

(a) A receptionist-switchboard operator would not have access to classified information.

(b) As a receptionist, she would control the access of visitors to the offices, but the security risk is not great.

(c) As a switchboard operator, she might have the opportunity of overhearing conversations, but sensitive discussions are never supposed to be carried on by telephone.

3. We are not in a position to comment on the other factors mentioned in the letter under reference.

Defence Liaison (2) Division

Document disclosed under the Access to Information Act
Document divulgué en vertu de la Loi sur l'accès à l'information

DEC 27 1977 A.H. Smith/SS

DEPARTMENT OF EXTERNAL AFFAIRS, CANADA. (FILE COPY)

NUMBERED LETTER

TO: The Permanent Mission of Canada to the United Nations, New York

FROM: THE UNDER-SECRETARY OF STATE FOR EXTERNAL AFFAIRS, OTTAWA, CANADA.

Reference: Your Letter 174 of February 24, 1958

Subject: Security Arrangements in the New Office

Security: CONFIDENTIAL

No: DS-155

Date: March 5, 1958

Enclosures: 1

Air or Surface Mail: Air

Post File No:

Ottawa File No. 50048-AF-40

43 | 50

References

Internal Circulation

Supplies & Properties

Communications

Done SS

Distribution to Posts

We were grateful to receive your prompt reply to our questions about security in your new offices. Our only comments are as follows.

Barring of Windows

2. If you are satisfied that there is no real need to instal bars or steel shutters over the windows of the Registry and Communications Room, we are prepared to agree with you. We had raised the question for your consideration because, in the light of the Australian action, we thought there might be a security risk of which we were not aware. Since, however, our offices are on the 28th floor and will be protected by security guards, and since the latches on the window should prevent surreptitious entry, we can see no need to follow the Australian example.

Cleaning of Offices

3. The possibility of paying Canadian personnel an additional remuneration to clean the Communications area in a Chancery has been under our consideration for some time. On security grounds we are generally in favour of the idea, not only in relation to your Mission, but also in relation to some other posts abroad. If we can obtain the necessary authority we shall be in touch with you again.

Duties of Security Guards

4. We are attaching, for your information, a copy of a document on the employment and duties of security guards. Specimen Standing Orders are included. As you will notice, the document has been prepared for the general guidance of posts with security guards, and we generally advise that it be followed as closely as possible. There are, however, usually local conditions which make some modifications necessary. Since you will be receiving security guards for your new offices, you might like to study the document and have Standing Orders ready for the guards when they arrive. We should, of course, like to see the draft Orders as soon as they are available. We will gladly consider any modifications which you think are necessary. For example, if the landlord insists on having duplicate keys in accordance with the fire

Ext. 181B (Rev. 2/52)

Document disclosed under the *Access to Information Act*
Document divulgué en vertu de la *Loi sur l'accès à l'information*

prevention laws of New York, then the Standing Orders should contain provisions for the method of sealing these keys and for their periodic inspection by the security guard or security officer.

Under-Secretary of State
for External Affairs

Document disclosed under the *Access to Information Act*
Document divulgué en vertu de la *Loi sur l'accès à l'information*

DEPARTMENT OF EXTERNAL AFFAIRS, CANADA.

NUMBERED LETTER

TO: THE UNDER-SECRETARY OF STATE FOR EXTERNAL AFFAIRS, OTTAWA, CANADA.

FROM: The Permanent Mission of Canada to the United Nations, New York

Reference: Your letter DS-78 of Feb. 5, 1958

Subject: Security Arrangements in the New Offices

Security: Confidential

No: 174

Date: February 24, 1958

Enclosures:

Air or Surface Mail: Surface

Post File No: 4

Ottawa File No. 50048-AF-40

References

FEB 28 1958

copies to: S+P (under covering memorandum) Communications Sec. (with copy of memo.)

Internal Circulation

Distribution to Posts

We are pleased to offer the following comments on your letter under reference.

2. We have approached the Australian Delegation and have been informed that their decision to bar their windows was based upon a policy automatically followed at all Australian missions. There was no peculiarity of construction involved at 750 Third Avenue. Although no specific amount was mentioned, we understand that the cost of barring windows will be high.

3. There are no ledges or balconies at 750 Third Avenue but an enterprising operator could presumably gain access to our offices on the 28th floor by working on the outside from either above or below and breaking the window glass. However, if the departmental policy is mainly to guard against surreptitious entry and if the security guards assigned to the Mission are to be on continuous duty during the quiet hours, we can probably meet our security needs without the installation of bars or steel shutters, particularly in view of the expense. We should appreciate, however, your further views on the matter. agreed? Yes.

Curtains and blinds

4. Each window will have a venetian blind which can easily be shut when the windows are cleaned. ok

Security Guards - cleaning of offices

5. The landlord is responsible for cleaning the offices and, as far as we can understand at this point, one cleaning woman will be assigned to our offices and her work will be performed at night.

6. The waxing of floors will most probably be done by two men who will do the whole area, also at night, once a month, and the corridors once a week. The cleaning of the Registry can be done with one of the guards on watch and we, of course, agree that the cleaning staff should never be left alone in the sensitive area.

....2

Ext. 182A (Rev. 2/52)

Document disclosed under the *Access to Information Act*
Document divulgué en vertu de la *Loi sur l'accès à l'information*

NO ENCLOSURES

Document disclosed under the *Access to Information Act*
Document divulgué en vertu de la *Loi sur l'accès à l'information*

7. Insofar as the cleaning of the Communications rooms is concerned, absolutely no one from the outside is allowed to enter and members of the staff have done their own cleaning in the past.

8. As the Communications area in the new building will be tiled, however, as opposed to being carpeted in Rockefeller Center, the periodical waxing of the floor presents a problem. It has been brought to our attention that, in Ottawa, the cleaning of the confidential area in the Communications Division is done by a confidential messenger who receives an additional monthly remuneration for this work. Is there a possibility that one of the security guards may be willing to do this under the same condition as prevails in Ottawa?

Washington raised the same question. See our cypher to SOP of March 3 where we agreed it was a good idea.

Security Keys

9. We are awaiting an appropriate moment to obtain information on this point. Our feeling is that the landlord will insist on having duplicate keys in accordance with the Fire Prevention Laws of New York. This, on the other hand, would not give him access to the security area proper which will be guarded by combination locked vault doors.

10. When we approach the landlord on the subject, we shall not fail to mention the presence of security guards.

Permanent Mission.

Document disclosed under the *Access to Information Act*
Document divulgué en vertu de la *Loi sur l'accès à l'information*

copy

DEPARTMENT OF EXTERNAL AFFAIRS, CANADA. (DUPLICATE)

NUMBERED LETTER

File 22/3

TO: THE UNDER-SECRETARY OF STATE FOR EXTERNAL AFFAIRS, OTTAWA, CANADA.

FROM: THE PERMANENT REPRESENTATIVE OF CANADA TO THE UNITED NATIONS, NEW YORK

Reference:

Subject: RECEPTION DUTIES - 750 THIRD AVENUE

Security: Restricted

No: 151

Date: February 12, 1958

Enclosures:

Air or Surface Mail: Surface

Post File No:

Ottawa File No. 50048-AF-40

43 -

References

file on 50046-AF-40 UNTS.

While planning for the removal of the Mission to its new headquarters next May, the question of reception duties has been discussed and we would like to let you have our views on the subject.

2. The reception desk at the Mission has always been taken over by one of the stenographers. This arrangement, although somewhat impracticable, has worked because of the contiguity of all offices and the fact that the stenographer-receptionist can more or less keep an eye on the door while taking dictation, or can ask one of her colleagues to take over temporarily.

3. In our new offices, however, the reception room will be farther from the officers' room and, more important, the receptionist will also be faced with the handling of the switchboard which will be installed within proximity of the receptionist's desk. To use a stenographer for this position, which will be clerical in nature, would hardly be feasible. This leaves us with two alternatives:-

(i) that a Clerk Grade 3 be posted from Ottawa

(ii) that a local employee be engaged to fill this position.

Internal Circulation

Mr Smith: would you please deal with this

24/3

4. Prevailing rates in New York City for receptionists and switchboard operators are as follows:;

Receptionists: $58-$68 a week, or $3016-$3536 a year.

Switchboard Operators: $62-$75 a week or $3224-$3900 a year.

We may add, in confidence, that the receptionist at the Canadian Consulate, paid by the Department of Trade and Commerce, is an Assistant (U.S.A.) Grade 6 with a salary range of $3372-$3852. Apart from her receptionist duties, this employee assists in preparing the Trade and Commerce accounts.

Distribution to Posts

5. Should you decide that, in the circumstances, it would be preferable to engage a local employee, we might reasonably expect a combined Receptionist-Switchboard Operator to command a higher salary than the rates mentioned above and you may, therefore, agree that this employee should come under the category of an Assistant (U.S.A.) Grade 7 with a salary range of $3624-$4344. This person would, no doubt, have to be a Canadian citizen, preferably bilingual, which brings up, of course, the subject of security clearance on which we shall require guidance from you.

6. We would, of course, prefer an External Affairs employee, but would be grateful, on the other hand, to have your views on the subject.

Perm. Rep.

Ext. 182C (Rev. 2/52)

Document disclosed under the *Access to Information Act*
Document divulgué en vertu de la *Loi sur l'accès à l'information*

FROM: THE CANADIAN PERMANENT DELEGATE TO THE UNITED NATIONS, NEW YORK

TO: THE SECRETARY OF STATE FOR EXTERNAL AFFAIRS, OTTAWA

RECEIVED
FEB 12 1948
EXTERNAL AFFAIRS

TOP SECRET

IMMEDIATE

CYPHER - TK

NEW YORK CITY, February 11th, 1948.

NO. 186

DOWNGRADED TO SECRET
REDUIT A SECRET

EXTERNAL AFFAIRS RECORDS
File No. 208-AF-
Sub.... Chron.... Filed....

No. 186. Following for Matthews from ~~McNaughton, Begins~~:

The problem of security of Top Secret papers entrusted to me has been the cause of much personal anxiety. The use of ordinary steel locked cabinets for this purpose is quite inadequate as little skill is required to enter them.

I understand the safe ordered was due here some time in January. If there is not much likelihood of its arrival during the next week or ten days I feel that the safe-keeping of Top Secret documents warrants special and immediate action. To this end I have had Lefeuvre examine and obtain quotation on suitable equipment. There is immediately available a Diebold Model 5016C vaultette of approximately 5-drawer cap size file cabinet capacity, with combination lock, for approximately $254.00, approved by Underwriters Laboratories. May I be advised whether I may proceed with purchase. Ends.

CANADIAN PERMANENT DELEGATE

Rec'd: 7:40 p.m.

Document disclosed under the *Access to Information Act*
Document divulgué en vertu de la *Loi sur l'accès à l'information*

CYPHER DIV.
EXTERNAL AFFAIRS
1948 FEB 12 AM 10:15

Document disclosed under the Access to Information Act
Document divulgué en vertu de la Loi sur l'accès à l'information

D.L.(2)/L.A.H. Smith/ck

DEPARTMENT OF EXTERNAL AFFAIRS, CANADA. *(FILE COPY)*

NUMBERED LETTER

TO: THE PERMANENT DELEGATION TO THE UNITED NATIONS, NEW YORK.

FROM: THE UNDER-SECRETARY OF STATE FOR EXTERNAL AFFAIRS, OTTAWA, CANADA.

Reference:

Subject: Security Arrangements in the New Offices.

Security: CONFIDENTIAL

No: DS-78

Date: February 5, 1958.

Enclosures:

Air or Surface Mail:

Post File No:

Ottawa File No. 50048-AF-40

43 | 50

References

We have been giving some thought to questions of security in the new offices on Third Avenue you expect to occupy this spring. The following points have occurred to us. You may wish to comment on them or raise further points.

Barring of Windows

2. We understand that the Australian Delegation, which is taking up space in the same building, is barring its windows on the inside. We would be interested to know whether you think the Canadian Delegation should take similar precautions on the windows of the Registry and Communications Room. Perhaps you could let us have some information as to whether there are ledges or balconies on the building which might represent a threat to the security of the sensitive areas. Even if there were not such ledges or balconies, a skilled operator could presumably gain access to our offices on the 28th floor by working on the outside from either above or below them. We understand as well, however, that there are burglar types of catches on the windows. If these windows cannot be forced without the penetrator leaving some sort of trace, you may think it an unnecessary trouble and expense to have bars put on the windows. On the other hand, if you believe that bars or steel shutters would be a wise precaution, we would be grateful if you could inform us as to how these might be installed and as to the types of frames which the windows now have.

Internal Circulation

S. & P. Div.

Done 5/58 T.C.

Curtains and Blinds

3. So far as we know, telephotography would not be an immediate threat since the nearest building of equivalent height which faces our offices is several blocks away. At the same time, we presume that the windows will be periodically cleaned from the outside, perhaps without advance notice. In such cases, it would be wise to have curtains or blinds on the windows of sensitive offices. You may, however, already have planned to install these, if only to keep out the hot summer sun.

Distribution to Posts

Security Guards

4. We are hoping to be able to send you three security guards when the new offices open. You will, therefore, be able to have a guard on duty during the quiet hours. We would be interested, however, to know

Ext. 181B (Rev. 2/52)

Document disclosed under the *Access to Information Act*
Document divulgué en vertu de la *Loi sur l'accès à l'information*

what arrangements will be made for the cleaning of the premises. Presumably the landlord will be responsible for cleaning and it will be done under the direction of the building superintendent. The cleaning of sensitive offices, and particularly of the Registry and Communications Room, represents a difficult problem. A security guard can watch closely only one member of a cleaning staff; and on no occasion should a cleaner be left alone in a sensitive area. Our normal practice is to have one cleaner, supervised by the guard on duty, at work in the sensitive area while the other cleaners work in the less sensitive parts. You may wish to enquire how many cleaners the landlord would wish to have working at one time in our premises. Perhaps as well you could suggest steps which could be taken to meet the problem of their supervision.

Security Keys

5. With the arrival of the guards it will be possible to set up a system for the control of security keys so that none have to leave the building. We would like to know, however, whether the new landlord will be as insistent as the old on possessing keys to the offices for use in case of an emergency. As you know, we do not like this idea. It is hoped that our new landlord will be more tractable since we are providing guards.

for Under-Secretary of State
for External Affairs.

Document disclosed under the Access to Information Act
Document divulgué en vertu de la Loi sur l'accès à l'information

D.1.(2) J. Timmerman/bwl

Let. NATS. 31/1/58

DEPARTMENT OF EXTERNAL AFFAIRS

MEMORANDUM

TO: L.A.H. Smith

FROM: J. Timmerman

REFERENCE:

Security

Date January 28, 1958.

File No.		
50048-AF-40		
43		6

SUBJECT: Security Arrangements - Permanent Delegation to the U.N., New York

Mr. Warren of Communications Division and Mr. Paul Belanger, the senior communications man with our Permanent Delegation in New York, discussed with me on Thursday, January 20, the proposed security arrangements in the new offices the Delegation expect to occupy in May or June of this year.

2. Several of the points we discussed will require action. These and my observations on them are:

(a) Barring of windows in Registry and Communications Room

The offices I believe are on the 28th floor; there is at least one floor, if not more, above. We shall be sharing the floor with other tenants. The Australian Delegation, which is taking up space in the same building, is barring its windows on the inside.

I have no information on ledges, balconies, etc. I understand the windows will be of 3/16 glass, set presumably in steel frames. Those which can be opened (every second one) have, I understand, hinges at the

...2

CIRCULATION

Ext. 326 (6/56)

Document disclosed under the *Access to Information Act*
Document divulgué en vertu de la *Loi sur l'accès à l'information*

top and two catches with handle and strike plate at the bottom. The latter are I believe a burglar type of catch. Perhaps we should have more information and an opinion from the local security officer before attempting to decide whether or not we should follow the example of the Australians and bar or steel shutter our windows. As time is short we will have to move quickly.

(b) Curtains or blinds for windows of executive offices

So far as I am aware, the offices will not be overlooked; the nearest building of equivalent height being several blocks away. Telephotography is therefore not an immediate risk. However, this situation may not last indefinitely. A factor is that windows will be cleaned from the outside. Perhaps we should install venetian blinds in sensitive offices now rather than later, such blinds as may be required in any case for other reasons.

(c) Cleaning of offices.

I do not know what the arrangements will be for having offices cleaned in the new building. I assume that the cleaning will be done by the landlord under the supervision of the building superintendent. This should not be a problem as we shall be sending guards to New York. However, the usual detailed arrangements will have to be made in respect of sensitive offices (particularly registry and communications rooms). You may wish to speak to me about this.

(d) Security keys.

With the posting of guards it should be possible to institute a proper system for the control of keys to security locks. Our present landlords insistence on having keys to our offices in the Rockefeller Centre for use in emergency has always presented a problem. We have tried to minimize the risk by placing

...3

Document disclosed under the *Access to Information Act*
Document divulgué en vertu de la *Loi sur l'accès à l'information*

the building superintendent's key in a wax-sealed envelope, periodically inspecting the envelope and requiring the superintendent to report to us immediately whenever he has occasion to use the key. Our new landlord may be a little more reasonable in view of the fact we are providing guards. The need for an emergency key will nevertheless remain and some special arrangements will have to be made out to meet this need.

J. Timmerman

Document disclosed under the Access to Information Act
Document divulgué en vertu de la Loi sur l'accès à l'information

D.L.(2)/E. F. Reyers/tk

DEPARTMENT OF EXTERNAL AFFAIRS, CANADA. *(FILE COPY)*

NUMBERED LETTER

TO: CANADIAN DELEGATION TO THE UNITED NATIONS, NEW YORK.

FROM: THE UNDER-SECRETARY OF STATE FOR EXTERNAL AFFAIRS, OTTAWA, CANADA.

Reference:

Subject: Door Locks for the New Offices.

Security: CONFIDENTIAL

No: DS- 654

Date: December 27, 1957.

Enclosures:

Air or Surface Mail:

Post File No:

Ottawa File No. 50048-AF-40

43. 50

References

We understand that all of the lock sets and latch sets for the new offices are to be supplied and installed by the contractor.

2. If this is the case, we would prefer that the locks be of a make and type similar to those generally used by the Department, as this would facilitate any replacements that eventually may be required.

3. The entrance door (Door No. 1) and the door to the line room (Door No. 28) should each be fitted with a Yale 197¼ Jimmy Resisting Rim Deadlock. All of the remaining doors should be fitted with Yale 0-48-1 Rim Deadlatches.

4. We should be grateful for your confirmation that the above locks are available in the United States, and that their procurement and installation will not cause any great inconvenience to those concerned.

Internal Circulation

for Under-Secretary of State for External Affairs.

Sgd
J
S+P.

Distribution to Posts

Ext. 181B (Rev. 2/52)

Document disclosed under the Access to Information Act
Document divulgué en vertu de la Loi sur l'accès à l'information

Supplies & Properties J.A. Zoubie/dmc

File E/R
27/12
50048 AF-40

DEPARTMENT OF EXTERNAL AFFAIRS

MEMORANDUM

TO: Defence Liaison (2) Division

FROM: Supplies & Properties Division / J.A.Zoubie

REFERENCE: Telephone conversation — Mr. Keyes — Mr. Zoubie.

Security: UNCLASSIFIED

Date: December 5, 1957

File No.	~~50048-AF-40~~ ~~1722-P-1-40~~ 50048-AF-40	
c/3		c

SUBJECT: New office premises at 750 3rd Ave. New York for Permanent Mission to U.N.

Please find attached one copy of the plan for the new office which the Permanent Mission will occupy about May 1, 1958. You will note along the right hand side that there are specifications for various things indicated. Among other things, they mention that lock sets will be provided by the contractor. No doubt you will wish to write to the Mission on this subject.

2. The attached plan is, of course, for retention by you.

J. A. Zoubie

Supplies and Properties Division.

Ext. 326
(2/53)

Document disclosed under the *Access to Information Act*
Document divulgué en vertu de la *Loi sur l'accès à l'information*

DEPARTMENT OF EXTERNAL AFFAIRS, CANADA. *(DUPLICATE)*

NUMBERED LETTER

TO: THE UNDER-SECRETARY OF STATE FOR EXTERNAL AFFAIRS, OTTAWA, CANADA.

FROM: The Canadian Embassy, Washington, D.C.

Reference: Your Letter DS-404 of April 9, 1957.

Subject: Destruction of Classified Waste

Security: CONFIDENTIAL

No: 1115

Date: August 13, 1957.

Enclosures:

Air or Surface Mail:

Post File No:

Ottawa File No. 50048-AF-40

52 | 52

References

Original on 50048-G-40

We note from the file that we have not yet replied to your letter under reference concerning the destruction of classified waste from New York, an omission which is regretted.

2. The procedure set forth in your letter DS-173 of April 9, 1957, to the Permanent Delegation, has been in effect since that date and is working quite satisfactorily.

3. Classified waste from New York is destroyed by fire at this Mission under the supervision of a member of our Communications Section as soon as possible after receipt. In the interval between time of receipt and time of destruction it is kept in safe custody in the Communications Section.

(Sgd. W.H. Cullen)

Internal Circulation

The Embassy

Distribution to Posts

2)

Document disclosed under the *Access to Information Act*
Document divulgué en vertu de la *Loi sur l'accès à l'information*

D.L.(2)/J.Timmerman/tk

DEPARTMENT OF EXTERNAL AFFAIRS, CANADA. *(FILE COPY)*

NUMBERED LETTER

TO: THE CANADIAN CONSULATE GENERAL, NEW YORK, N.Y.

FROM: THE UNDER-SECRETARY OF STATE FOR EXTERNAL AFFAIRS, OTTAWA, CANADA.

Reference:

Subject: Security Containers

Security: CONFIDENTIAL

No: DS-316

Date: June 4, 1957.

Enclosures:

Air or Surface Mail:

Post File No:

Ottawa File No. 50048-~~AS~~-40 AF

58 | 50

References

Internal Circulation

S. & P. Div.

June 6/57 T.K.

Distribution to Posts

You will be receiving a number of special security containers for the storage of cypher tapes and ancillary communications equipment.

2. Our records reflect that you now have on your charge

1 Taylor 221 Special Safe;

1 Taylor 222 Special Safe;

1 Dominion Safe;

1 T.H.S. Safe;

1 Herring-Hall-Marvin Safe;

and that the Permanent Delegation have on their charge

1 Taylor 221 Safe.

3. It occurs to us that you may not require all the safes you now have once the special communications cabinets arrive. Would you be good enough, therefore, to advise us in this regard. It would be helpful to us if in doing so you would inform us on the use to which each safe you wish to retain is to be put and, additionally, if you would give us a complete description of the T.H.S. safe (which we do not appear to have).

for Under-Secretary of State for External Affairs.

Ext. 181B (Rev. 2/52)

Document disclosed under the *Access to Information Act*
Document divulgué en vertu de la *Loi sur l'accès à l'information*

D.L.(2)/J. Timmerman/tk

DEPARTMENT OF EXTERNAL AFFAIRS, CANADA. *(FILE COPY)*

NUMBERED LETTER

TO: THE PERMANENT MISSION OF CANADA TO THE UNITED NATIONS, NEW YORK.

FROM: THE UNDER-SECRETARY OF STATE FOR EXTERNAL AFFAIRS, OTTAWA, CANADA.

Reference: Your Letter No. 87 of Mar. 27, 1957.

Subject: Destruction of Classified Waste

Security: CONFIDENTIAL

No: DS-173

Date: April 9, 1957.

Enclosures:

Air or Surface Mail:

Post File No: 4

Ottawa File No. 50548-A$-40 F

58 | 50

References

Thank you for replying so promptly to our Letter DS-118 of March 19. As we have received a favourable reply from Washington to a similar letter, there seems no reason why we should not implement the new procedure on a trial basis without further delay.

2. In despatching your classified waste to Washington for destruction, we should be grateful if you would adopt the following detailed procedure:

(a) Classified waste from other than communications offices be delivered daily to Communications Section for inclusion in waste bags. NOTE: This waste should not include accountable material as such material may be destroyed only on Certificate of Destruction. Accountable material for destruction should, therefore, be returned to the Department against receipt for burning under supervision.

(b) Care be taken to ensure that any material with hard edges such as books, etc., are so packed in the waste bag as to prevent bags from tearing in transit.

(c) Immediately a waste bag is filled, it be stapled and handed over to the mail clerk for onward transmission to Ottawa.

(d) Waste bags with a schedule indicating that they contain classified waste be enclosed in an outer diplomatic mail bag properly fastened, sealed and numbered. No other material to be included in the bag.

(e) Bags containing waste be handled and accounted for in exactly the same manner as ordinary classified diplomatic mail.

3. As you have not yet been provided with a supply of kraft paper bags, we suggest that you use as waste bags for the time being any diplomatic mail bags you may have which are approaching a state of unserviceability through wear and tear. These bags could be packaged and returned to you from Washington by parcel post until such time as you receive your kraft bags.

.. 2

Internal Circulation

Communications Div.

Rene
apr 9/57
T.K.

Distribution to Posts

Washington

Sent under cover of letter dated apr 9/57

Ext. 181B (Rev. 2/52)

Document disclosed under the *Access to Information Act*
Document divulgué en vertu de la *Loi sur l'accès à l'information*

4. We are sending a copy of this letter to Washington for any comment they might wish to make.

for Under-Secretary of State
for External Affairs.

Document disclosed under the *Access to Information Act*
Document divulgué en vertu de la *Loi sur l'accès à l'information*

DEPARTMENT OF EXTERNAL AFFAIRS, CANADA.

NUMBERED LETTER

File 914

TO: THE UNDER-SECRETARY OF STATE FOR EXTERNAL AFFAIRS, OTTAWA, CANADA.

FROM: THE PERMANENT MISSION OF CANADA TO THE UNITED NATIONS, NEW YORK, N.Y.

Reference: Your Letter No. DS-118 of March 19, 1957

Subject: Destruction of Classified Waste.

Security: CONFIDENTIAL

No: 87

Date: March 27, 1957

Enclosures:

Air or Surface Mail:

Post File No: 4

Ottawa File No.	
50048-AE 40	
43	58

References

D-2

1
2
3
4
5
6
7
8
9

MAR 28 1957

As we have pointed out in the past the present method of disposing of classified waste at the Permanent Mission is not particularly satisfactory for the reasons which you mentioned in your letter referred to above.

2. The proposal which you set forth in your letter seems to us to be reasonable and workable. It would entail only the smallest change in the present arrangements. At the moment the messenger proceeds from his residence directly to the station. With the new procedure the messenger would have to start from his home some fifteen minutes earlier. If the Embassy in Washington also concurs in this procedure, we would be very glad to commence implementing it on a trial basis, reporting further on its success or failure after one month.

R A Crowley
Permanent Mission.

Internal Circulation

Copy to Comms Div

Comms Div are consulting re rules.

Distribution to Posts

D

Ext. 182A (Rev. 2/52)

Document disclosed under the *Access to Information Act*
Document divulgué en vertu de la *Loi sur l'accès à l'information*

1957 MAR 28 PM 3:18

1957 MAR 28 PM 2:14

NO ENCLOSURES

Document disclosed under the *Access to Information Act*
Document divulgué en vertu de la *Loi sur l'accès à l'information*

D.L.(2)/G. C. COOK/LK

DEPARTMENT OF EXTERNAL AFFAIRS, CANADA. *(FILE COPY)*

NUMBERED LETTER

TO: THE CANADIAN PERMANENT MISSION TO THE UNITED NATIONS, NEW YORK.

FROM: THE UNDER-SECRETARY OF STATE FOR EXTERNAL AFFAIRS, OTTAWA, CANADA.

Reference:

Subject: Destruction of Classified Waste

Security: CONFIDENTIAL

No: DS-118

Date: March 19, 1957.

Enclosures:

Air or Surface Mail:

Post File No:

Ottawa File No.	
50048-A8-40	
58	50

References

As you perhaps know, the present arrangement whereby classified waste originating in New York is returned to Ottawa by diplomatic bag for destruction has long been regarded as being cumbersome and unsatisfactory, but no alternative arrangement has hitherto suggested itself. One of the principal objections has been the excessively large number of bags the courier must handle on the New York - Ottawa leg of the trip.

2. A member of Communications Division not long ago made a trial run of the Ottawa - New York - Washington courier run and came up with a proposal with seems eminently sensible. This is that New York's classified waste be taken for destruction not to Ottawa but to Washington where, we understand, adequate facilities and personnel are available. The advantage of this is that on the New York - Washington part of the run the courier is normally much less burdened with bags.

3. Your comments on this proposal would be appreciated. A similar letter has been sent to Washington.

Internal Circulation

for Under-Secretary of State for External Affairs.

Distribution to Posts

Ext. 181B (Rev. 2/52)

Document disclosed under the Access to Information Act
Document divulgué en vertu de la Loi sur l'accès à l'information

D.L.(2)/J. Timmerman/jk

SUPPLIES AND PROPERTIES DIVISION

CONFIDENTIAL

Attention: Mr. J. Zoubie

Jan. 14, 1957.

DEFENCE LIAISON (2) DIVISION

50048-AF-40
129 | 129

Telephone Conversation - Zoubie - Timmerman of 7 January.

Security Arrangements - Permanent Delegation, New York.

The establishment of the Permanent Delegation to the United Nations, New York, in a different building and location to the Consulate General has the following disadvantages from the security point of view:

(a) The Permanent Delegation offices cannot be protected against the threat of intrusion by electronic devices.

(b) The Consulate General and other affiliated Canadian offices will be deprived of security guard protection.

(c) The Consul General and his officers will be denied the convenient use of a secure conference/office in the Permanent Delegation block of offices.

(d) Classified telegrams and other papers will have to be carried through the streets of New York between the Delegation and the Consulate offices.

(e) With a concentration of offices in one location, it should be possible to provide from our own resources, at little inconvenience and no extra cost, offices in which to accommodate the Delegation to the General Assembly instead of having to house them in insecure and expensive accommodation in the Beekman Tower Hotel. This may not be possible if the Permanent Delegation is located separately.

. . 2

Document disclosed under the *Access to Information Act*
Document divulgué en vertu de la *Loi sur l'accès à l'information*

2. Intrusion devices constitute one of the main threats to security today. Although the current risk of their being used against us in New York is probably not as great as the current risk in Iron Curtain countries, it is conceivable that this will not always be the case. The principal danger in America today is, of course, from private operators and foreign agents rather than American intelligence, although we cannot discount the latter entirely. Established in a separate building encompassed by offices which may be occupied by almost anyone, there can be no assurance that every telegram received and sent is not being read or that every discussion and piece of dictation is not being overheard. The only way in which this disadvantage can be overcome is by concentrating our offices in one building and so arranging them that certain sensitive Delegation offices (including the machine cypher room and a conference room) are protected both from above and below and laterally by other Canadian offices.

3. In our opinion, the current risk to security in New York may not be high enough to justify solely on security grounds the inconvenience of establishing the Delegation offices so far from the center of United Nations activities. However, taken together with other obvious administrative advantages (the main one of which we see to be the possibility of providing from within our own resources offices in which to accommodate the Delegation to the General Assembly) there seems little doubt that the Delegation should be located with other Canadian offices rather than separately.

Defence Liaison (2) Division.

Document disclosed under the Access to Information Act
Document divulgué en vertu de la Loi sur l'accès à l'information

DEPARTMENT OF EXTERNAL AFFAIRS, CANADA.

NUMBERED LETTER

TO: THE UNDER-SECRETARY OF STATE FOR EXTERNAL AFFAIRS, OTTAWA, CANADA.

FROM: THE PERMANENT MISSION OF CANADA TO THE UNITED NATIONS, NEW YORK.

Reference: Circular Document Admin. No. 41/56 of August 16, paragraph 4.

Subject: Security Arrangements.

Security: SECRET

No: 504

Date: September 11, 1956

Enclosures:

Air or Surface Mail:

Post File No: 4

Ottawa File No. 50048-AF-40

6 | 50

References

SEP 20 1956

Mr d'Orsonnens
To records
file
Recorded Sept 24.56

Internal Circulation

Please file

Distribution to Posts

D

Our present practice as regards keys has been described in our Despatch No. 159 of March 7, paragraphs 2 to 4. It may be appropriate, however, to explain other related procedures and practices at this Mission.

2. All members of the staff have been instructed to return all files to the registry at the end of each working day. On occasions this has not been possible when, for example, officers are obliged to work after the registry has been closed. This usually happens, however, at Assembly time when different security arrangements are in force. Ordinarily there is little difficulty or inconvenience in implementing that procedure.

3. In the registry top secret and secret files are kept in a Taylor safe. This provides no problem because there is only a small number of these files at this Mission. (At present, however, this practice is temporarily in abeyance because both the combination and locks of the Taylor safe are in Canada being repaired. We should be grateful to learn when they are likely to be returned to us.)

4. As part of the routine in Rockefeller Center, the char staff have access to the main body of the Chancery. The char work is done well after office hours. Cleaning in the registry, however, is done in the morning, by arrangement, when a security-cleared member of the Mission is present to supervise. The registry door, as you will recall, has a lock with an "off master" key. Apart from the char staff there are no locally-engaged employees at this Mission.

5. As we explained earlier, the all-night staff of Rockefeller Center are in possession of keys to the main part of the Chancery, that is exclusive of the registry. There seems to be little point in having members of the Mission remain late (often as late as 9 p.m.) to supervise char work in that part of the office. An added difficulty is that the tenants of Rockefeller Center have little control over the time when the char staff appear. It seems unlikely, therefore, that we could improve on the present arrangement.

P.S. The Communications Section, as you know, is located in the Consulate General and comes under separate security arrangements.

R A Macdonald
Permanent Mission.

Ext. 182A (Rev. 2/52)

Document disclosed under the *Access to Information Act*
Document divulgué en vertu de la *Loi sur l'accès à l'information*

1985 SEP 20 PM 2:50

NO ENCLOSURES

Document disclosed under the *Access to Information Act*
Document divulgué en vertu de la *Loi sur l'accès à l'information*

DEPARTMENT OF EXTERNAL AFFAIRS, CANADA

NUMBERED LETTER

File

TO: THE UNDER-SECRETARY OF STATE FOR EXTERNAL AFFAIRS, OTTAWA, CANADA.

FROM: THE PERMANENT MISSION OF CANADA TO THE UNITED NATIONS, NEW YORK, N.Y.

Reference:

Subject: Security.

Security: RESTRICTED

No: 336

Date: June 14, 1956

Enclosures:

Air or Surface Mail:

Post File No: 4

Ottawa File No. 50048-AF-40

90 | 58

References

D-2

1
2
3 4
4
5
6
7
8
9
10

18/6/56

We would be very grateful for a copy of the report which Mr. C.C. Stokes was expected to prepare on return to Ottawa dealing with the security problems at this Mission. We would be grateful also for your comments on this report, if it is available, since there are a number of problems which we would like to dispose of before July 1st due to staff movements at this post.

John Hadwen
Permanent Mission.

Internal Circulation

Distribution to Posts

10

Ext. 182A (Rev. 2/52)

Document disclosed under the *Access to Information Act*
Document divulgué en vertu de la *Loi sur l'accès à l'information*

NO ENCLOSURES

Document disclosed under the *Access to Information Act*
Document divulgué en vertu de la *Loi sur l'accès à l'information*

D.L.(2)/J. Timmerman/tk

DEPARTMENT OF EXTERNAL AFFAIRS, CANADA. ***(FILE COPY)***

NUMBERED LETTER

TO: THE PERMANENT DELEGATION OF CANADA TO THE UNITED NATIONS, NEW YORK.

FROM: THE UNDER-SECRETARY OF STATE FOR EXTERNAL AFFAIRS, OTTAWA, CANADA.

Reference: Your Letter No. 336 of June 14, 1956.

Subject: Security

Security:

No: DS-318

Date: June 28, 1956.

Enclosures:

Air or Surface Mail:

Post File No:

Ottawa File No.
50048-AF-40
55 58

References

Attached as requested is a copy of a report submitted by Mr. Stokes following his recent visit to your post.

for Under-Secretary of State for External Affairs.

Internal Circulation

Distribution to Posts

Ext. 181B (Rev. 2/52)

Document disclosed under the *Access to Information Act*
Document divulgué en vertu de la *Loi sur l'accès à l'information*

FILES ~~50048-N-40~~
50048-AF-40

April 25, 1956.

Defence Liaison (2)/G. C. Cook/tk

50048-AF-40
55

Visit of Mr. C. C. Stokes to New York

orig. on 50048-N-40

Mr. Holmes telephoned from New York on April 25, to say that unexpected difficulties had arisen during the course of Mr. Stokes' maintenance check of the two offices' security containers, particularly in connection with one of the Taylor safes, both the locks of which are being sent back to the Department. Mr. Holmes stated that because of these difficulties it would be necessary for Mr. Stokes to remain in New York for some days longer than had originally been planned, until Monday, April 30. I said that we had no objection to this.

2. Mr. Holmes raised the question of the thirty Sargent and Greenleaf combination padlocks which had recently been requested by New York. I said that Supplies and Properties were prepared to issue the necessary authority for the local purchase of these locks in New York as soon as they were provided with a price quotation.

sgd GC Cook
G. C. Cook

Document disclosed under the *Access to Information Act*
Document divulgué en vertu de la *Loi sur l'accès à l'information*

DEPARTMENT OF EXTERNAL AFFAIRS

CROSS REFERENCE SHEET

Security Restricted

50048-AF-40		
55	✓	✓

Type of Document Telegram No. 319 Date April 25/56

From Permanent Mission, New York

To External Affairs

Subject: Maintenance of Safes

Original on File No. 50048-N-40

Copies on File No.

Other Cross Reference Sheets on

Prepared by Ann Mitchell Def S/R

Ext. 308

Document disclosed under the *Access to Information Act*
Document divulgué en vertu de la *Loi sur l'accès à l'information*

D.L.(2)/G. C. Cook/tk

FINANCE DIVISION

Attention: Travel Section

April 18, 1956.

DEFENCE LIAISON (2) DIVISION

50048-AF-40
55

Visit of Mr. C. C. Stokes to New York

At the request of our Permanent Delegation to the United Nations, New York, it has been arranged for Mr. C. C. Stokes, the Department's lock and safe expert, to visit New York for a period of two or three days to inspect and check all the security equipment in the offices of both the Permanent Delegation and the Consulate General.

2. It would be appreciated if you would obtain a ticket for Mr. Stokes on the overnight train for New York, leaving Ottawa on the afternoon of Monday, April 23 to arrive in New York on the morning of April 24, with open return. Would you also provide Mr. Stokes with a travel advance sufficient for three days' expenses. Hotel accommodation in New York has already been arranged.

(Signed) G. G. CREAN.
Defence Liaison (2) Division.

Document disclosed under the *Access to Information Act*
Document divulgué en vertu de la *Loi sur l'accès à l'information*

MR. CREAN

RESTRICTED

April 17, 1956.

D. L. (2)/G. C. Cook/tk

50048-AF-40

55

Maintenance of Safes - New York

In our Despatch No. DS-176 to the Permanent Delegation in New York, we agreed with their request that the security equipment of the Permanent Delegation and the Consulate General be checked (they have been having some trouble with combinations), and said that we would arrange to send Mr. Stokes down in the near future. He is free to go next week, and arrangements are being made to issue him a special passport. Attached for approval, if you agree, is a telegram to New York stating that it is planned that he arrive there on April 24.

G. C. Cook

Document disclosed under the Access to Information Act
Document divulgué en vertu de la Loi sur l'accès à l'information

5004-AF-40
551 50

FM PERMANENT MISSION NEWYORK APR 18/56 RESTD

TO EXTERNAL 269

MAINTENANCE OF SAFES

MR C STOKES'S VISIT TO NEWYORK, COMMENCING APR 24, IS CONVENIENT TO BOTH THE PERMANENT MISSION AND THE CONSULATE GENERAL. SINGLE ROOM WITH BATH HAS BEEN RESERVED FOR MR STOKES AT NEW WESTON HOTEL, CORNER OF 50TH STREET AND MADISON AVENUE, FOR APR 24. IT IS EXPECTED THAT MR STOKES WILL BE ABLE TO CHECK ALL SECURITY EQUIPMENT FOR BOTH MISSIONS ON THIS VISIT.

Document disclosed under the *Access to Information Act*
Document divulgué en vertu de la *Loi sur l'accès à l'information*

FILE COPY

Security RESTRICTED

MESSAGE FORM
OUTGOING

File No. 50048-AF-40

90 | 50

FROM: THE SECRETARY OF STATE FOR EXTERNAL AFFAIRS, CANADA

TO: THE PERMANENT REPRESENTATIVE OF CANADA TO THE UNITED NATIONS, NEW YORK.

Message To Be Sent		No. DS-237	Date APRIL 17, 1956.	For Communications Section Only
AIR CYPHER				
EN CLAIR				
CODE				
CYPHER	XX			

Priority

ORIGINATOR

(Signature)

G. C. Cook/tk
(Name Typed)

Div. D. L. (2)

Local Tel. 2-5124

APPROVED BY

Signed) G. G. CREAN
(Signature)

G. G. Crean
(Name Typed)

Internal Distribution:
S.S.E.A. - U.S.S.E.A.
done April 17 - LP

Done

Date

Copies Referred To:

Done

Date

REFERENCE: OUR DESPATCH DS-176 OF APRIL 6, 1956.

SUBJECT: MAINTENANCE OF SAFES

ACCORDING TO PRESENT PLANS, MR. C. C. STOKES WILL ARRIVE IN NEW YORK ON THE MORNING OF TUESDAY, APRIL 24, FOR TWO OR THREE DAYS TO INSPECT AND CHECK ALL YOUR SECURITY EQUIPMENT. IF TIME OF VISIT CONVENIENT TO YOU, WOULD YOU KINDLY ARRANGE HOTEL ACCOMMODATION AND ADVISE.

SECRETARY OF STATE
FOR EXTERNAL AFFAIRS.

Ext. 97 (Rev. 1/52)

Document disclosed under the Access to Information
Document divulgué en vertu de la Loi sur l'accès à l'information

file
18 Apr 56

DEPARTMENT OF EXTERNAL AFFAIRS

MEMORANDUM

TO: MR. CREAN

FROM: D. L. (2)/G. C. Cook/tk

REFERENCE:

Security RESTRICTED

Date April 17, 1956

File No. 50048-AF-40

55

SUBJECT: Maintenance of Safes - New York

In our Despatch No. DS-176 to the Permanent Delegation in New York, we agreed with their request that the security equipment of the Permanent Delegation and the Consulate General be checked (they have been having some trouble with combinations), and said that we would arrange to send Mr. Stokes down in the near future. He is free to go next week, and arrangements are being made to issue him a special passport. Attached for approval, if you agree, is a telegram to New York stating that it is planned that he arrive there on April 24.

G. C. Cook

Ext. 326
(2/53)

Document disclosed under the Access to Information Act
Document divulgué en vertu de la Loi sur l'accès à l'information

D.L.(2)/G.C. COOK/LSIG/EK

DEPARTMENT OF EXTERNAL AFFAIRS, CANADA. (FILE COPY)

DESPATCH

TO: THE PERMANENT REPRESENTATIVE OF CANADA TO THE UNITED NATIONS, NEW YORK.

FROM: THE SECRETARY OF STATE FOR EXTERNAL AFFAIRS, OTTAWA, CANADA.

Reference: Your Despatch No. 159 of March 7, 1956.

Subject: Security Problems

Security: SECRET

No: DS- 176

Date: April 6, 1956.

Enclosures:

Air or Surface Mail: Surface

Post File No:

Ottawa File No. 50048-A~~S~~-40

55 | 60

References

Internal Circulation

Distribution to Posts

As you are aware, physical security arrangements in New York have long been regarded as unsatisfactory. We were, therefore, pleased to have your up-to-date review of these problems and your suggestions as to how best to deal with them, having in mind the probable move to new and permanent quarters some year and a half hence. While we are in general agreement with your survey, there are some points on which we feel comment should be made and possible alternatives investigated.

(a) Sealing of Doors

2. As you point out, the principal shortcoming under existing arrangements is the wholly inadequate protection afforded to the cypher machines, tapes, and other communicating equipment. We have carefully considered your suggestion that the doors leading to the communications rooms and registry be sealed in some manner each night, but have concluded that such an arrangement would be impractical. Seals would very likely reveal intrusion by ordinary criminals or the like, but it is doubtful that they would afford much protection against surreptitious entry by experts, and there is the further risk that apprehensions might falsely be aroused by accidental or possibly mischievous breaking of the seals by char staff or others.

(b) Security Containers

3. When, because of circumstances beyond our control, buildings or individual rooms cannot be made reasonably secure, the most practical course to adopt would appear to be to provide suitable security containers for the individual and close protection of sensitive machines, etc. We are, therefore, investigating the possibilities of having security shells specially built to accommodate the sensitive parts of the new type cypher machines with which you are to be provided in the near future. It is hoped that the machines can be mounted on suitable casters, and that the specially designed security containers will have a built-in fold-down ramp which will allow the machine, each night, to be placed inside with a minimum of effort. Four shells would be provided, one for each of the three machines in their regular location and one to be located in the communications repair room for storage of parts or, when necessary, an entire machine undergoing repair. If the containers are no longer needed when the move to permanent quarters in the new building is made, they

Ext. 179B (Rev. 2/52)

Document disclosed under the *Access to Information Act*
Document divulgué en vertu de la *Loi sur l'accès à l'information*

can be usefully employed at other posts. We will advise you of the outcome of our enquiries in this direction, and in the meantime would welcome your comments on this suggested solution to at least one of your more pressing security problems.

4. As regards the problem of storing tapes, we note that these, like the machines, are at present afforded no protection at all. As you perhaps know, where strong room facilities are not available, the most desirable alternative for the storage of cypher equipment and other Top Secret material is a Taylor safe. Our records indicate that three Taylor safes are in the offices of the Permanent Delegation and Consulate-General, and your letter states that two of these, one in the Communications Repair Room and one in the Permanent Mission Registry, are not at present in use. Might it not be possible to re-consider the use of these safes, and possibly their physical location, for the provision of storage space for tapes? We note that you propose to use one of the Taylor safes now unused for the storage of diplomatic bags, and that one of the Taylor safes is in fact being used for this purpose. We would prefer to see the Taylor safes now in your possession used for the storage of tapes rather than for the temporary storage of diplomatic bags. If this can be arranged, security shells, considered adequate for the purpose, can be supplied for the temporary storage of bags.

(c) Disposal of Confidential Waste

5. This continues to be a difficult problem, and we have noted your offer to look into the possibilities of incinerators in the neighbourhood, or of having waste burned at the private residence of one of the officers of the post. We would be reluctant to have secret waste disposed of in an incinerator over which we perhaps would not have complete control, and, with regard to the suggestion that waste be burned at an officer's private residence, destruction by fire is, in any event, a difficult and unpleasant business and would require the installation of a suitable screen in the flue. The Somat pulper is a much more convenient means of destroying waste, but, as you know, the Rockefeller Center authorities have refused to permit the installation of one of these machines. As an alternative to destruction by fire at an officer's private residence, might it be possible to install a pulper in such a residence? The machine could, presumably, later be moved to the permanent quarters in the new building. We would be glad to have your comments on this suggestion.

(d) Maintenance of Safes

6. While it is unfortunately not possible at present to have someone visit New York to make a general survey of the security situation, we agree that an inspection and check of all the combination locks, particularly those of the Taylor safes, should be made as soon as possible. We will, therefore, arrange that the Department's lock expert visit New York in the near future for this purpose, and will inform you when arrangements have been completed.

7. In summary,

(a) after consideration, we have come to the conclusion that the sealing of doors is impractical, and that

Document disclosed under the *Access to Information Act*
Document divulgué en vertu de la *Loi sur l'accès à l'information*

(b) as an alternative, adequate security containers should be provided. In this connection, we are

(1) investigating the possibilities of obtaining specially-designed security shells to protect cypher machines and parts thereof during quiet hours, and

(2) ask that you re-examine the use now made of your Taylor safes with a view to accommodating tapes; security shells to be provided if required for the temporary storage of diplomatic bags.

(c) As regards disposal of confidential waste, we would be grateful if you would investigate the possibilities of installing a Somat pulper in the private residence of an officer of the mission.

(d) The Departmental lock expert will visit New York as soon as possible to check all combination locks.

G. H. SOUTHAM

for Secretary of State
for External Affairs.

Document disclosed under the Access to Information Act
Document divulgué en vertu de la Loi sur l'accès à l'information

D.L.(2)/J. Timmerman/tk

COMMUNICATIONS DIVISION

CONFIDENTIAL

Copy on 50048 AF-40

April 5, 1956.

DEFENCE LIAISON (2) DIVISION

cc. 50048-1-40	
90	90

New York Telegram No. 44 dated

January 27, 1956.

Storage Facilities for Rockex Key Tapes

Thank you for referring New York telegram to us for comments.

2. We are agreed that the policy should be as follows:

(a) Where vault type communications rooms exist and guards are provided, security shells with inserts may be used for the storage of tapes. The use of such containers should enable supervisors firmly to control the release and storage of tapes and provide adequate protection in emergencies (such as fire), or when it is essential for other valid reasons temporarily to admit non-security cleared personnel to the communications room.

(b) Where, in our missions abroad, no secure communications rooms or guards exist, the only acceptable form of container for the storage of tapes, basic books and One-Time pads, etc. is the Taylor special safe. However, it may be necessary at times to modify this requirement because of the existence of local conditions (such as floors which cannot bear the weight of the Taylor) which we cannot alter or control. These special cases, of which New York seems to be a good example, must each be considered on their merits with a view to arriving at the best solution possible.

. . 2

Document disclosed under the *Access to Information Act*
Document divulgué en vertu de la *Loi sur l'accès à l'information*

3. We are now dealing with New York Letter No. 159 of March 7, 1956, which also raises the question of providing additional storage facilities for cypher equipment. We shall clear our reply with you before despatch. An extra copy of this memorandum is attached for reference to Supplies and Properties Division.

Defence Liaison (2) Division.

D.L.(2)/J. Timmerman/tk

000242

CONFIDENTIAL

April 5, 1956.

COMMUNICATIONS DIVISION

Copy on 50048-1-40

50048-AF-40

~~50048-AF-40~~

90 90

DEFENCE LIAISON (2) DIVISION

New York Telegram No. 44 dated January 27, 1956.

Storage Facilities for Rockex Key Tapes

Thank you for referring New York telegram to us for comments.

2. We are agreed that the policy should be as follows:

(a) Where vault type communications rooms exist and guards are provided, security shells with inserts may be used for the storage of tapes. The use of such containers should enable supervisors firmly to control the release and storage of tapes and provide adequate protection in emergencies (such as fire), or when it is essential for other valid reasons temporarily to admit non-security cleared personnel to the communications room.

(b) Where, in our missions abroad, no secure communications rooms or guards exist, the only acceptable form of container for the storage of tapes, basic books and One-Time pads, etc. is the Taylor special safe. However, it may be necessary at times to modify this requirement because of the existence of local conditions (such as floors which cannot bear the weight of the Taylor) which we cannot alter or control. These special cases, of which New York seems to be a good example, must each be considered on their merits with a view to arriving at the best solution possible.

. . . 2

Document disclosed under the Access to Information Act
Document divulgué en vertu de la Loi sur l'accès à l'information.

Document disclosed under the *Access to Information Act*
Document divulgué en vertu de la *Loi sur l'accès à l'information*

3. We are now dealing with New York Letter No. 159 of March 7, 1956, which also raises the question of providing additional storage facilities for cypher equipment. We shall clear our reply with you before despatch. An extra copy of this memorandum is attached for reference to Supplies and Properties Division.

Defence Liaison (2) Division.

Document disclosed under the *Access to Information Act*
Document divulgué en vertu de la *Loi sur l'accès à l'information*

D.L.(2)/J. Timmerman/tk

SUPPLIES AND PROPERTIES
FOR FILE
ACTION TAKEN
TELEGRAM
LETTER
BY:
DATE

DEPARTMENT OF EXTERNAL AFFAIRS

MEMORANDUM

TO: SUPPLIES AND PROPERTIES DIVISION

FROM: DEFENCE LIAISON (2) DIVISION

REFERENCE:

Security CONFIDENTIAL

Date March 9, 1956.

File No. 50048-AF-40

90		90

SUBJECT: ECOSOC 21st Session, New York - Security Arrangements

I refer to a conversation between Mr. Henry of your Division and Mr. Timmerman.

2. Attached is a copy of a memorandum to United Nations Division regarding the provision of a security shell and insert for the use of the Canadian Delegation to the 21st Session of ECOSOC, which is being held in New York from April 17 to May 4, 1956.

3. We should be grateful if you would arrange with the Canadian Consulate General, New York, for this cabinet to be delivered to the hotel at which the Delegation will be staying (probably the Beekman Towers) and for the cabinet and insert subsequently to be re-covered and stored in the Consulate General against a future similar need.

SUPPLIES AND PROPERTIES

1	
2	
3	
4	
5	
6	
7	
8	
9	
10	

MAR 13 1956

G.H. Southam

Defence Liaison (2) Division.

Shipped 22-3-56 by Smith Transport

Ext. 326
(2/53)

Document disclosed under the Access to Information Act
Document divulgué en vertu de la Loi sur l'accès à l'information

D.L.(2)/J. Timmerman/tk

UNITED NATIONS DIVISION

CONFIDENTIAL

March 9, 1956.

DEFENCE LIAISON (2) DIVISION

~~5475-DS-33-40~~
cc. 50048-AF-40

Your memorandum of Feb. 23, 1956.

90 | 90

ECOSOC 21st Session - Security Arrangements

Attached is suggested section on security arrangements for inclusion in the Commentary for the Canadian Delegation to the 21st Session of ECOSOC.

2. We presume the Delegation will be supplied with copies of the booklet on security to which reference is made in the attached paper.

3. Supplies and Properties Division have agreed to supply, through the Canadian Consulate General in New York, a security shell and four-drawer enclosure for the use of the Delegation.

GHS

Defence Liaison (2) Division.

Document disclosed under the *Access to Information Act*
Document divulgué en vertu de la *Loi sur l'accès à l'information*

SECURITY ARRANGEMENTS

The attention of all members of the delegation is drawn to the regulations for the handling and transmission of classified material as set out in the government booklet on security prepared by the Security Panel for use by departments and agencies of the Canadian Government. Classified material includes any written, typewritten or printed material -- such as documents, stenographers' note books, carbon papers, notes, drafts and spoiled copies -- which contains classified information.

2. Classified material used by the delegation should be sent by diplomatic bag, by cypher telegram, or by courier. In no circumstance should it be handled, sealed or unsealed, by any person other than a member of the delegation or member of the government service posted by Ottawa, nor should any other person have access to such material. In this regard, a distinction should be made between drivers serving as chauffeurs and as messengers. Non-Canadian drivers may serve as chauffeurs for the delegation but they should not be used for the carriage of classified material, unless in the capacity of a chauffeur driving a Canadian authorized to handle such material and who retains it in his custody.

3. When not in use, particularly during lunch hour and at night, classified material may be stored in the approved security container provided in the hotel. Knowledge of the combination setting for this container should, of course, be confined to members of the delegation and security cleared Canadian staff. Highly sensitive documents, however, should not be kept overnight at the hotel, but be handed over to the Canadian Permanent Delegation or Consulate General for safekeeping.

4. Delegates are reminded that hotel rooms are not secure and, therefore, should not be used as places in which to hold highly sensitive discussions or conversations.

5. Arrangements should be made for the destruction of all classified waste in consultation with the Canadian Delegation Security Officer. This officer should also be consulted if advice on security problems is required.

Document disclosed under the *Access to Information Act*
Document divulgué en vertu de la *Loi sur l'accès à l'information*

Ext. 102 A

f. 14

OTTAWA FILE
No. 50048-14-40
90 | 50

Despatch No. 159

Date March 7, 1956.

SECURITY CLASSIFICATION
SECRET

FROM: THE PERMANENT REPRESENTATIVE OF CANADA TO THE UNITED NATIONS, NEW YORK.

TO: THE SECRETARY OF STATE FOR EXTERNAL AFFAIRS, CANADA

Reference

Subject: Security Problems

D-2

Copies Referred To

Letter sent. 6/4/56.

No. of Enclosures

Post File

No.

We have just completed a survey of some of the security problems of this Mission and the following are a series of points on which we would be grateful for your comments in the near future. The Mission will move in perhaps a year and a half to the new permanent Canada House headquarters, but this is not, I think, a reason for avoiding security problems now if relatively inexpensive and practical solutions can be found. It is expected that our general security position will be very much improved in the new building but additional equipment which we need now will be of equal use after the move, and equipment which we now have and which is surplus will still be surplus in the new building.

Doors to the Communications and Registry Rooms

2. The security standard of protection for our cypher and registry rooms is most unsatisfactory. I do not subscribe to the theory that New York being a post in a friendly country, we can afford to treat our security problems here as any less urgent than those of Missions in less friendly countries. New York is a large enough city to contain as many unfriendly agents as in any of the world capitals in which we have Missions. For this reason I am anxious that a special effort be made to improve the situation with regard to the three doors leading to our communications facilities, and the door to the Permanent Mission registry. These four doors, which are identical, are made of steel with the frames inserted in the walls. The frames fit well and the doors are substantial.

3. However, the door locks are, I would consider, compromised. Because of Rockefeller Center regulations we are not permitted to install combination locks on doors. The Rockefeller argument, with which you are familiar, is that, in case of emergency, building superintendents must have access to any of the rooms. We understand that several battles on this point have been fought with the Rockefeller authorities in the past and that all have been unsuccessful, and unless instructed to the contrary we do not propose to raise the question again. It would apparently serve very little purpose.

4. Therefore, at the moment the situation with which we have to contend is that of unsatisfactory door locks which are described as being "off master". In the

...2

Document disclosed under the *Access to Information Act*
Document divulgué en vertu de la *Loi sur l'accès à l'information*

NO ENCLOSURES

1956 MAR 9 AM 8:58

Document disclosed under the *Access to Information Act*
Document divulgué en vertu de la *Loi sur l'accès à l'information*

case of the Communications room there are four sets of keys held by the Communications staff. While, of course, we have no specific evidence to support our opinion, it is nonetheless likely that at one time or another at least one set of these keys has been compromised. The master key itself is supposed to be kept sealed in a Rockefeller Center safe. We have not inspected this arrangement but we would judge it to be equally ineffective. In fact, we have been told of an incident which occurred some time ago. One of the Communications officers working alone locked himself out of the room and phoned the Rockefeller Building Superintendent asking to have the master key unsealed and used. The Rockefeller Superintendent was loath to go through the elaborate procedure necessary and sent over one of his staff who, without much difficulty, opened the door with a skeleton key. It is a matter of great concern that our cypher machines should be under such little protection as this and I would be grateful if, as a matter of urgency, you could ask the RCMP to investigate something along the following lines.

5. Would it not be possible for a block of wood or some more suitable material to be bolted into the door frame and another block of material bolted into the door in such a way that when the door was closed there was a surface available which could be sealed. It may be difficult to find a seal which can be used on metal or whatever substance is used in these blocks, but I think that the special branch of the RCMP should be able to make some suggestions. In fact, I regard this matter as sufficiently serious to warrant the sending of the departmental security officer or an RCMP officer to New York to make a special study of this question. I might mention that, in addition to the doors themselves, there are transoms. These, of course, could be permanently sealed, whereas the doors would have to be resealed every night. Another possibility, of course, is some form of electric burglar alarm, but in the absence of Canadian guards to respond to the alarm this does not seem a serious possibility.

Cypher Machine Room

6. This is the room in which all our cypher machines are kept. It has a large window with a venetian blind and an ordinary window frame with a lock on it. However, the window is on the fourth floor of the building, which does not have ledges or outside access to it except possibly from the roof. This problem is not as urgent as the doors, but I think consideration might be given to some form of seal or lock for the windows. It is possible, of course, to continue the present practice of keeping the venetian blind lowered at all times, but I think that curtains should also be purchased and I have asked the Administrative Officer to forward a requisition for curtains for this room, for the adjoining room and for the Communications repair room. In the inner room there is also a rented filing cabinet without any lock at all which is used for storing the reels of tape. This situation has been reported several times to Ottawa and it is understood that a new storage cabinet is on order. In the meantime, the security of the doors to the room is all the more important. The floor cannot stand the weight of a Taylor safe which would in any case be too small for the large number of tapes now held. There are no other major security problems connected with this room which is, I understand, regularly inspected by the United Kingdom Service for microphones and wire taps, etc.

...3

Document disclosed under the *Access to Information Act*
Document divulgué en vertu de la *Loi sur l'accès à l'information*

#221

7. The cypher machine room door leads into a second room of the same size which contains the unclassified and news circuit machines and a Taylor safe and a Chubb safe file. There is no curtain on the window in this room at present. The Taylor safe is used to store all the combination records of the Mission and the emergency OTP material. The Chubb safe file is used to store the Communications three-months' files and some passports for the Consulate. We have no other comments to make on the security of this room except to note that the door from it leads into the inner corridor and presents the same "off master" key problem as the inner door.

Disposal of Confidential Waste

8. At the present time confidential waste is collected in bags in the cypher room and forwarded to Ottawa with the courier for destruction. I presume that this is a cheap method of destruction, but it is not a particularly efficient one. In our opinion it would be desirable if some alternative could be found, making the destruction of confidential waste by our own staff in New York possible. Incidentally, we found that the United Kingdom follows the identical practice and sends all its confidential waste for destruction to Washington. If you wish, we would be glad to make enquiries concerning incinerators in the neighbourhood or at one of the officer's residence where the destruction could be supervised. We will await your views, however, before initiating further enquiries.

Communications Repair Room

9. Besides the two communications rooms already described, only one of which, of course, leads into the corridor, is another room which is used as a communications repair center. In our opinion the security classification for this room should be the same as for the inner cypher room. In the repair room broken-down parts of the cypher machines are frequently exposed and should be given the highest possible form of protection. Accordingly, I recommend that this door into the corridor be given the same protection as the door to the cypher rooms. The door itself, while of frosted glass, has a transom of plain glass, a clearly unsatisfactory situation since in certain types of light it is quite possible for there to be a reflection on the glass of whatever may be going on in the room (we are having this painted). Of course, the corridor to which reference is made is a corridor within the Canadian Government Office not generally used for the public. The difficulty, however, is that this corridor itself has no security, being protected by a standard key lock at both ends.

10. This room, which we propose to curtain, also contains Taylor safe No. 6 which is empty and not at present in use. The window in this room is fitted with a venetian blind which is kept lowered at all times.

...4

Document disclosed under the Access to Information Act
Document divulgué en vertu de la Loi sur l'accès à l'information

Consulate General Registry

11. In the large room on the fourth floor used as a general registry there are a few cabinets in which classified material is kept. We understand that a requisition has already been forwarded (Consulate General Telegram No. 68 of February 9) for thirty Sergeant and Greenleaf padlocks for all the cabinets in the Consulate and in the Permanent Mission containing classified material. When these locks arrive the registry cabinets should be sufficiently protected. In the meantime it is evident that most of the keys to the existing Yale locks are compromised. The Consulate General registry possesses two filing cabinets fitted with Sergeant and Greenleaf locks, one of which is used for classified material and the other which is used for funds held by the Accountant. In addition, there is a Taylor safe now used for storing diplomatic bags. Frequently this is not enough storage space and bags have to be put in the Permanent Mission registry overnight. We propose, if you have no objection, to move the Taylor safe now in the Communications repair center into the Consulate registry for use in storing diplomatic bags as necessary. In the new Canada House I hope we will have a walk-in vault for such storage problems which could from time to time be acute in a Mission such as this through which a great deal of classified material passes.

Permanent Mission Registry

12. I am not sure that there is sufficient classified material in the ordinary cabinets of Consulate General registry to warrant the same special measures for protecting the doors suggested for the cypher rooms. There are a large number of officers with keys to the registry and it would be most difficult, but more important unnecessary, to seal this office provided the nearby cypher facilities are properly protected.

13. However, we do think that the door on the Permanent Mission registry on the fifth floor should be sealed. There are now five copies of the key to this door held by the Mission. The same arguments apply here as to the doors on the cypher rooms, and in addition, the room is more isolated.

14. The Permanent Mission registry also contains a Taylor safe which is not at present used. You may wish to keep this point in mind. It is quite possible that this Mission could dispense with a Taylor safe if you had urgent need for it somewhere else. It is a long time (we have no records) since the Taylor safes were cleaned and they are all becoming difficult to work. We would be grateful if someone could come from Toronto or Ottawa to check their operation.

15. The Permanent Mission registry also holds two steel filing cabinets with Sergeant and Greenleaf locks which are used for keeping ordinary classified files at present. (The registry does not have any special material to protect and hardly ever receives any top secret documents.) These cabinet are, however, useful at General Assembly time since they can be moved to our other offices in the Beekman Tower Hotel.

...5

Document disclosed under the *Access to Information Act*
Document divulgué en vertu de la *Loi sur l'accès à l'information*

16. In summary, this Mission will:

(1) curtain the cypher room windows (3) (requisition going forward);

(2) use Sergeant and Greenleaf combination locks on all classified material containers (order gone forward);

(3) paint over the transom on the repair room;

(4) move a Taylor safe from the repair room to the Consulate registry if possible (after agreement with Rockefeller).

We would be grateful if Ottawa could:

(1) investigate the possibility of sealing four doors;

(2) supply combination cabinet for tapes in cypher room;

(3) advise on problem of secret waste disposal;

(4) advise on the maintenance of the Taylor safes.

R A MacKay

Permanent Representative.

Document disclosed under the *Access to Information Act*
Document divulgué en vertu de la *Loi sur l'accès à l'information*

DEPARTMENT OF EXTERNAL AFFAIRS

MEMORANDUM

TO: ~~Mr. Timmerman~~

FROM: ~~D.L. (2)/G. H. Southam/tk~~

REFERENCE:

Security CONFIDENTIAL

Date Feb. 27, 1956

File No. 50048-AF-40

90		90

SUBJECT: Security at U. N. Delegation Office, New York

Mr. John Hadwen came to see me this afternoon. He was recently appointed to our U. N. Delegation in New York, and Mr. MacKay, two or three days ago, asked him to take on the responsibilities of security officer. ~~there.~~ He has only had an opportunity for a cursory glance at the situation there, but he has already noted three points for immediate comment:

(a) The building management have keys for the locks of the room containing machine cypher, and the registry room; these keys are not given to the building janitor staff, but are kept by the building superintendent in a sealed envelope in case of emergency; this provides a certain degree of security, but hardly sufficient for our standards;

I shall write New York re this. It is a problem of long standing as the building authorities are adamant. Lock up covers for the cypher machines may be the only answer.

(b) the Delegation has indented for Sargent and Greenleaf padlocks for their cabinets, but has not received them and meanwhile is continuing to use Yale padlocks;

These are on order.

(c) the room containing the Taylor safe requires net curtains - I told Mr. Hadwen that an indent for this item would be approved immediately.

Yes.

2. Mr. Hadwen will be in town until Wednesday afternoon, and can be reached in the U. N. Division at Local 5643. If you have time on your return on Wednesday morning, I suggest that you have a quick look at the attached file and then have a talk with Mr. Hadwen about his problems.

I phoned UN Division on Wed. morning but Mr Hadwen was not available & could not be reached. I shall, however, write as above. 3/3

Thanks — to file

G. H. Southam

G. H. Southam

Ext. 326
(2/53)

000253

Document disclosed under the *Access to Information Act*
Document divulgué en vertu de la *Loi sur l'accès à l'information*

D.L.(2)/J. Timmerman/tk

Original on 50048-N-40

SUPPLIES AND PROPERTIES DIVISION

RESTRICTED

Feb. 14, 1956.

~~50048-N-40~~
cc. ~~50048AF-40~~
129

DEFENCE LIAISON (2) DIVISION

Consulate General, New York

Telegram No. 86 of February 9, 1956.

Locks

--- Attached is a copy of the above-mentioned telegram.

2. We agree that key operated padlocks on bar and hasp cabinets should be replaced by Sargent and Greenleaf No. 8088 combination padlocks wherever this is possible, in view of the enhanced security the latter provide.

3. Our records indicate that our Consulate General and Permanent U. N. Delegation in New York have a total of 31 bar and hasp filing cabinets, of which 7 already are equipped with Sargent and Greenleaf combination padlocks.

4. We should be grateful, therefore, if you would raise an Authority for the purchase locally by New York of 30 Sargent and Greenleaf No. 8088 combination padlocks. It is suggested that New York be asked to return to the Department the useable key operated padlocks they now possess for re-issue or disposal.

for Defence Liaison (2) Division.

Document disclosed under the *Access to Information Act*
Document divulgué en vertu de la *Loi sur l'accès à l'information*

DEPARTMENT OF EXTERNAL AFFAIRS

CROSS REFERENCE SHEET

Security: Restricted

50048-AF-40		
129	✓	✓

Type of Document: Telegram No. 68 Date: FEB 9/56

From: Consulate General - N.Y.

To: E.A.

Subject:

Request for thirty Sargent & Greenleaf Padlocks

Original on File No. 50048-N-40

Copies on File No.

Other Cross Reference Sheets on

Prepared by: RS

Ext. 308

Document disclosed under the *Access to Information Act*
Document divulgué en vertu de la *Loi sur l'accès à l'information*

Security SECRET

MESSAGE FORM
OUTGOING

File No. 50048-AS-40

/// ///

FROM: THE SECRETARY OF STATE FOR EXTERNAL AFFAIRS, CANADA

TO: THE PERMANENT REPRESENTATIVE OF CANADA TO THE UNITED NATIONS, NEW YORK.

Message To Be Sent		No.	Date	For Communications Section Only
AIR CYPHER		325	August 22, 1955.	SENT — AUG 22 1955
EN CLAIR				
CODE				
CYPHER AUTO	XX			

Priority

ORIGINATOR

(Signature)

D.C. Arnould/tk
(Name Typed)

Div. D.L. (2)

Local Tel. 5124

APPROVED BY

G H Southam
(Signature)

G. H. Southam
(Name Typed)

Internal Distribution:
S.S.E.A. + U.S.S.E.A.
done, P.H. Aug 23/55
Communications Div.
Finance Div.

Done T.K.

Date Aug. 23/55

Copies Referred To:

Done

Date

Ext. 97 (Rev. 1/52)

REFERENCE: Your message No. 429 of August 16, 1955.

SUBJECT: Accommodation for Communications Section at Beekman Tower for 10th Session of General Assembly

Rooms 405 and 407 would seem entirely satisfactory for the Communications Office.

2. I concur with your suggestion of placing special locks on the doors of these rooms and should be grateful if you would arrange with the management of the Beekman Tower to have these locks with keys "off master" installed. We would require the premises as of September 11.

3. A Department truck, accompanied by two constables of the five man detail of RCMP security guards, will arrive on the evening of September 11 with the communications equipment. The three other constables will also arrive on that date.

Secretary of State
for External Affairs.

Document disclosed under the *Access to Information Act*
Document divulgué en vertu de la *Loi sur l'accès à l'information*

AFFAIRS

22 PM 1:23

Document disclosed under the *Access to Information Act*
Document divulgué en vertu de la *Loi sur l'accès à l'information*

50048-AF-40
6 | 6

Restricted.

Ottawa, August 15, 1955

FROM: **THE DEPARTMENT OF EXTERNAL AFFAIRS, CANADA**

TO: THE CANADIAN PERMANENT DELEGATIONTO THE UNITED NATIONS, NEW YORK, U. S. A.

We are forwarding by (Courier 99 **) the following:-** Aug. 16/55

TWO (2) SARGENT & GREENLEAF COMBINATION PADLOCKS
Nos. 314, 315.

D-2

These are to be used on the two cabinets being shipped to you from H. H. Popham Co. Ltd. under order E.A. 50416.

AUG 18 1955

When the above has been received and checked, would you kindly sign and return the original form Ext. 27 R.

Under-Secretary of State for External Affairs

Attention: C. d'Ornano, D. L. (2) Division, Rm. 251 East Block.

This is to certify that the above mentioned items have been received in good order.

CPDUN.	AUG 17 1955	
Place	**Date**	**Signature**

Ext. 27 R (Rev. 2/53)

Document disclosed under the *Access to Information Act*
Document divulgué en vertu de la *Loi sur l'accès à l'information*

AUG 16 PM 2:53

AUG 16 PM 3:16

Document disclosed under the Access to Information Act
Document divulgué en vertu de la Loi sur l'accès à l'information

DEPARTMENT OF EXTERNAL AFFAIRS

MEMORANDUM

TO: Mr. J. Dougan
Defence Liaison Division (2)

FROM: Supplies and Properties Division

REFERENCE: Permanent Delegation to United Nations, New York.

SUBJECT: 4 drawer file cabinet.

Security: Unclassified

Date: August 3, 1955.

File No. 50048-AF-40
~~9722-C-40~~

6		6

Under Order No. E.A. 50416 (H.H. Popham Co. Ltd.) we are shipping 2 steel 4 drawer file cabinets with the approved welded hasps and angle bar.

2. The supplier expects to deliver in New York in 3 to 4 weeks.

3. Would you please arrange to supply the necessary Sargent and Greenleaf combination padlocks for these cabinets.

for Supplies and Properties Division

Mr. J'Amours + file

2 Padlocks S&G No. 31-4-315 Sent to Mail Room for Courier 15/8/55

2.8.55

Copy to file

Ext. 326
(2/53)

Document disclosed under the *Access to Information Act*
Document divulgué en vertu de la *Loi sur l'accès à l'information*

DEPARTMENT OF EXTERNAL AFFAIRS, CANADA. *(DUPLICATE)*

NUMBERED LETTER

TO: THE UNDER-SECRETARY OF STATE FOR EXTERNAL AFFAIRS, OTTAWA, CANADA.

FROM: THE CANADIAN CONSULATE GENERAL, NEW YORK

Reference: Cir. Doc. B116/51 and H 60/52

Subject: Instructions regarding combination locks.

Security: SECRET

No: 205

Date: April 4th, 1955.

Enclosures: one

Air or Surface Mail:

Post File No: Communications

Ottawa File No. 50048-AF-40

6 | 6

References

Orig on 50048-N-40

Enclosed in a separate, sealed envelope is the settings for combination locks for the Consulate General and the Permanent Delegation, New York.

W. H. HOLMES
CONSULATE GENERAL

Internal Circulation

Distribution to Posts

Ext. 182C (Rev. 2 /52)

Document disclosed under the Access to Information Act
Document divulgué en vertu de la Loi sur l'accès à l'information

Defence Liaison (2)/J.-Y. Grenon/kr

DEPARTMENT OF EXTERNAL AFFAIRS, CANADA. *(FILE COPY)*

NUMBERED LETTER

TO: The Permanent Delegation of Canada to the United Nations, New York.

FROM: THE UNDER-SECRETARY OF STATE FOR EXTERNAL AFFAIRS, OTTAWA, CANADA.

Reference: Your letter No. 538 of June 15,1954

Subject: Security Containers.

Security: CONFIDENTIAL

No: D- 428

Date: July 7, 1954

Enclosures:

Air or Surface Mail: Air

Post File No:

Ottawa File No. 50048-AF-40

6 | SD

References

Your assumption that your two Preston enclosure cabinets may be used for TOP SECRET material was right. In this connection I would like to draw your attention to our letter D-782 of December 21, 1953.

GEORGE P. KIDD

for Acting Under-Secretary of State for External Affairs

Internal Circulation

Distribution to Posts

Ext. 181B (Rev. 2/52)

Document disclosed under the *Access to Information Act*
Document divulgué en vertu de la *Loi sur l'accès à l'information*

A

OTTAWA FILE
No. 50048-AF-40

SECURITY CLASSIFICATION
CONFIDENTIAL

Letter No. 538

Date June 15, 1954.

D-7

1
2
3
4
5
6
7
8
9
10

17 JUN 1954

FROM: THE PERMANENT DELEGATION OF CANADA TO THE UNITED NATIONS, NEW YORK.

TO: THE UNDER-SECRETARY OF STATE FOR EXTERNAL AFFAIRS, CANADA

Reference: Your Letter No. D-119 of February 16, 1954.

Subject: Security Containers.

The amount of Top Secret material now in the possession of the Delegation has increased to such an extent that our Records Room safe is no longer able to contain all of it. I assume that the two Preston enclosure cabinets referred to in your letter D-119 may be used for Top Secret material, but I should be grateful if you would confirm this understanding.

D.R.C. Bedson
for Permanent Delegation.

Copies Referred To.....

No. of Enclosures .....

Post File No.....

1954 JUN 17 AM 3:28

D

Document disclosed under the Access to Information Act
Document divulgué en vertu de la Loi sur l'accès à l'information

Est. & Org. Division/P. Dumas/EB

DEPARTMENT OF EXTERNAL AFFAIRS, CANADA. (FILE COPY)

NUMBERED LETTER

TO: Permanent Delegation of Canada to the United Nations, New York, U.S.A.

FROM: THE UNDER-SECRETARY OF STATE FOR EXTERNAL AFFAIRS, OTTAWA, CANADA.

Reference: Your letter No. 395 of May 6, 1954

Subject: Special char service.

Security: CONFIDENTIAL

No: A-351

Date: May 26, 1954

Enclosures:

Air or Surface Mail:

Post File No:

Ottawa File No. 50048-AF-40

Local Staff: Permanent Delegation of Can. to U.N., N.Y.

47 | 47

References

Copy on 10667-Z-2-40

We note that, for security reasons, you have had to make special arrangements for the cleaning of the records room from Monday to Friday of each week at 9:00 a.m., under the supervision of a member of the records room staff. We also note that there will be an additional charge of from $30.00 to $35.00 each month for this special cleaning service.

2. We are seeking the Treasury Board's authority for the permanent employment by your office of an additional part-time charwoman, under the conditions indicated above. We enclose a copy of our recommendation to the Treasury Board on this subject, and we shall inform you of their decision when it is received. In the meantime, it will be in order for you to charge to the Department the salary of this additional employee, under the provisions of Section 149.4.3 on emergency employment of the Departmental Regulations.

Internal Circulation

C.T.O.
Accounts
Pay Section

Distribution to Posts

HENRY F. DAVIS

Acting Under-Secretary of State for External Affairs

Ext. 181B (Rev. 2/52)

Document disclosed under the Access to Information Act
Document divulgué en vertu de la Loi sur l'accès à l'information

Defence Liaison (2)/J.-Y. Grenon/mmr/kr

Mr Williams

DEPARTMENT OF EXTERNAL AFFAIRS

MEMORANDUM

TO: ESTABLISHMENTS AND ORGANIZATION DIVISION

File

FROM: Defence Liaison (2) Division

REFERENCE: Letter No. 395 dated May 6, 1954 from Permanent Delegation of Canada to the United Nations, New York.

SUBJECT: Special Char Service for the Delegation in New York.

Security CONFIDENTIAL

Date May 19, 1954

File No.		
50048-AF-40		
6		6

Pierre Dumas
MAY 31 1954

Attached is a copy of letter No. 395 from the Permanent Delegation of Canada to the United Nations concerning special arrangements for a char service for the Delegation in New York. It seems to me that the subject dealt with in paragraph 2 of this letter falls normally within the jurisdiction of your Division. This Division is only concerned with the security aspect of the proposed cleaning service and we are satisfied that the cleaning of the Records Room should be done under the supervision of a Canadian member of the Delegation staff.

I would be grateful if you would seek the necessary authority for the expenditure involved in this special char service, if you approve, and inform the Delegation accordingly.

George P. Kidd
Defence Liaison (2) Division

Ext. 326
(2/53)

Document disclosed under the *Access to Information Act*
Document divulgué en vertu de la *Loi sur l'accès à l'information*

50048-AF-40

395

May 6, 1954.

CONFIDENTIAL

THE PERMANENT DELEGATION OF CANADA TO THE UNITED NATIONS, NEW YORK.

Your Letter No. D-195 of March 22.

Security Precautions at the Permanent Delegation.

We have now had installed a solid metal door and transom cover at the entrance to our Records Room in place of the former glass panel door and transom cover. The management of Rockefeller Center were not willing to allow us to instal our own lock in the solid metal door, but they arranged for this key to be "off master" and for all copies to be held by Delegation staff except one which, under the terms of our lease, is held by the Superintendent of the Protection and Security Division of Rockefeller Centre: the Superintendent keeps this one key in a sealed envelope in his vault for use only in case of an emergency. Should there be need for its use an officer of the Delegation is to be notified immediately.

2. Arrangements have also been made for the cleaning of the Records Room from Monday to Friday of each week at 9 a.m. under the supervision of a member of the Records Room staff. There will be an additional charge of from $30 to $35 each month for this special cleaning service. We found it necessary to incur this cost since the regular Rockefeller Center char service does not begin work until 7:30 p.m. and we thought it unfair to the staff to expect them to remain until 8 or 9 p.m. each night to supervise the cleaning woman. However, since the extra charge for the char service will be incurred as a direct result of the new security arrangements, I should be grateful if you would seek authority for this additional monthly expenditure by the Delegation.

3. The security arrangements for the Delegation Records Room are now identical with those in existence for the Communications Section of the Consulate-General. We are now satisfied that our classified material is receiving the maximum protection possible in the absence of a 24-hour security guard.

DAVID M. JOHNSON

Permanent Delegation.

Document disclosed under the *Access to Information Act*
Document divulgué en vertu de la *Loi sur l'accès à l'information*

Refer to: Suppl. Prot. (copy) to see remarks by Colonel

Ext. 182A

OTTAWA FILE
No. 50048-AF-40

3V 50

SECURITY CLASSIFICATION
CONFIDENTIAL

Letter No. 395

Date May 6, 1954.

FROM: THE PERMANENT DELEGATION OF CANADA TO THE UNITED NATIONS, NEW YORK.

TO: THE UNDER-SECRETARY OF STATE FOR EXTERNAL AFFAIRS, CANADA

Reference: Your Letter No. D-195 of March 22.

Subject: Security Precautions at the Permanent Delegation.

D V

1	
2	
3	
4	
5	
6	
7	
8	
9	
10	

10 MAY 1954

Copies Referred To.....

No. of Enclosures .....

Post File No.....

We have now had installed a solid metal door and transom cover at the entrance to our Records Room in place of the former glass panel door and transom cover. The management of Rockefeller Center were not willing to allow us to instal our own lock in the solid metal door, but they arranged for this key to be "off master" and for all copies to be held by Delegation staff except one which, under the terms of our lease, is held by the Superintendent of the Protection and Security Division of Rockefeller Centre: the Superintendent keeps this one key in a sealed envelope in his vault for use only in case of an emergency. Should there be need for its use an officer of the Delegation is to be notified immediately.

2. Arrangements have also been made for the cleaning of the Records Room from Monday to Friday of each week at 9 a.m. under the supervision of a member of the Records Room staff. There will be an additional charge of from $30 to $35 each month for this special cleaning service. We found it necessary to incur this cost since the regular Rockefeller Center char service does not begin work until 7:30 p.m. and we thought it unfair to the staff to expect them to remain until 8 or 9 p.m. each night to supervise the cleaning woman. However, since the extra charge for the char service will be incurred as a direct result of the new security arrangements, I should be grateful if you would seek authority for this additional monthly expenditure by the Delegation.

3. The security arrangements for the Delegation Records Room are now identical with those in existence for the Communications Section of the Consulate-General. We are now satisfied that our classified material is receiving the maximum protection possible in the absence of a 24-hour security guard.

David M. Johnson
Permanent Delegation.

D Copy transmitted to E.O. division with memo. of May 19. Please

Document disclosed under the Access to Information Act
Document divulgué en vertu de la Loi sur l'accès à l'information

Defence Liaison (2) J. M. Derry

DEPARTMENT OF EXTERNAL AFFAIRS, CANADA. *(FILE COPY)*

NUMBERED LETTER

TO: THE PERMANENT DELEGATION OF CANADA TO THE UNITED NATIONS, New York.

FROM: THE UNDER-SECRETARY OF STATE FOR EXTERNAL AFFAIRS, OTTAWA, CANADA.

Reference: Your letter #200 of March 11, 1954

Subject: Security Precautions at the Permanent Delegation

Security: CONFIDENTIAL

No: D - 195

Date: March 22, 1954

Enclosures:

Air or Surface Mail:

Post File No:

Ottawa File No. 50048 - AF - 40

32 | 50

References

The authority sent in our letter No. D-633 of September 22, 1953, for the expenditure involved in replacing the glass panel door of your Records Room with a solid metal door and transom covers the alternative suggested in the last paragraph in your letter under reference. I gather from the comments in paragraph 3 of your letter No. 798 of September 8, 1953, that should you be able to persuade the Rockefeller Centre security officer to agree to the installation of one of our own locks on that particular door, thereby denying the building staff access to that room, it would be possible to arrange for the cleaning of the room under supervision of a member of the Delegation staff.

2. However, should the Rockefeller Centre management insist that the replacement door be the one they offer to supply, i.e., the one which has its keyhole in the centre of the door handle, I should be grateful if you would investigate the possibilities of still having one of our own Yale locks installed on that door and have, as required by the Rockefeller Centre regulations, one copy of that key left sealed in the custody of the security officer himself to be opened only in the case of an emergency. I must admit that it would be with reluctance that we would agree to such a compromise, but as it would mean that only one other person than Ottawa-based members of staff could gain access to the Records Room, the procedure should be preferred to the one originally suggested by the Rockefeller Centre management whereby their guards and the char staff would still be entitled to gain access to such a restricted area. Please inform us at your early convenience of the result of your enquiries from the Rockefeller Centre management.

Internal Circulation

Supplies and Properties Division

Done K Richardson March 22/54.

Distribution to Posts

Jean E. KIDD

Acting Under-Secretary of State for External Affairs

Ext. 181B (Rev. 2/52)

Document disclosed under the *Access to Information Act*
Document divulgué en vertu de la *Loi sur l'accès à l'information*

Ext. 182A

OTTAWA FILE
No. 50048-AF-40

57 50

SECURITY CLASSIFICATION
CONFIDENTIAL

Letter No. 200

Date March 11, 1954.

D-0

1
2
3
4
5
6
7
8
9
10

15 MAR 1954

FROM: THE PERMANENT DELEGATION OF CANADA TO THE UNITED NATIONS, NEW YORK.

TO: THE UNDER-SECRETARY OF STATE FOR EXTERNAL AFFAIRS, CANADA

Reference: Your Letter No. D-633 of September 22, 1953.

Subject: Security Precautions at the Permanent Delegation.

Copies Referred To.....

No. of Enclosures .....

Post File No.....

Your letter under reference authorized the Delegation to substitute for the glass panel door of our Records Room a solid metal door which was available in the Consulate General downstairs.

2. However, the door available in the Consulate General is supplied by the Rockefeller Centre management and has its keyhole in the centre of the door handle, as have the glass panel doors already installed in the Delegation offices. Your Letter No. D-605 of September 3, 1953 (your file No. 50048-N-40) pointed out that the Rockefeller Centre type lock which was adjusted by technicians on the staff of Rockefeller Centre did not satisfy the Department's security requirements.

File

3. Under the circumstances we hesitated to have the solid metal door installed in the Delegation Records Room since it was not deemed by the Department to be acceptable from a security point of view. I should be grateful if you would look into the matter once more and let us have your opinion on whether it would be worthwhile substituting the available solid metal door for the glass panel one at present in place. Alternatively, you might wish to authorize the purchase of a door whose lock would be acceptable from a security standpoint.

they insist on off-master keys.

David M. Johnson
Permanent Delegation.

D

Document disclosed under the *Access to Information Act*
Document divulgué en vertu de la *Loi sur l'accès à l'information*

DEPARTMENT OF EXTERNAL AFFAIRS, CANADA.

NUMBERED LETTER

TO: THE UNDER-SECRETARY OF STATE FOR EXTERNAL AFFAIRS, OTTAWA, CANADA.

FROM: The Permanent Delegation of Canada to the United Nations, New York.

Reference: Your letter No. D.119 of February 16

Subject: Preston Enclosure Cabinets

Security: CONFIDENTIAL

No: 141

Date: February 19, 1954.

Enclosures:

Air or Surface Mail:

Post File No:

Ottawa File No.	
50048-AF-40	
52	50

References

D-8

1
2
3
4
5
6
7
8
9
10

22 FEB 1954

Internal Circulation

Distribution to Posts

10

9-6

The two cabinets were received at the Delegation earlier this week and are now installed in our file room. We are grateful for this addition to the number of our security containers since the amount of material in the higher security classifications has increased beyond the limit which would enable it to be held in our safe.

for D.R.C. Bedson
Permanent Delegation.

Ext. 182A (Rev. 2/52)

Document disclosed under the *Access to Information Act*
Document divulgué en vertu de la *Loi sur l'accès à l'information*

Defence Liaison (2)/J.-M. Dery/kr

DEPARTMENT OF EXTERNAL AFFAIRS, CANADA. *(FILE COPY)*

NUMBERED LETTER

TO: Canadian Permanent Delegation to the United Nations
New York, N.Y.

FROM: THE UNDER-SECRETARY OF STATE FOR EXTERNAL AFFAIRS, OTTAWA, CANADA.

Reference:

Subject:

Security: CONFIDENTIAL

No: D - 119

Date: 16 February 1954

Enclosures:

Air or Surface Mail: Air

Post File No:

Ottawa File No. 50048 - AF - 40

32 | 50

References

Internal Circulation

Distribution to Posts

You will shortly be receiving two Preston enclosure cabinets. The combination has been set at 50 - 25 - 50 and you will find the instructions for changing the setting taped inside the cabinet.

2. Please note that it is essential that the cabinets be level; otherwise they will become distorted and you will find yourselves unable to close the door.

D. W. MUNRO

for the Acting Under-Secretary of State for External Affairs

Ext. 181B (Rev. 2/52)

Document disclosed under the Access to Information Act
Document divulgué en vertu de la Loi sur l'accès à l'information

Defence Liaison (2) Div./PVLyon/mb

DEPARTMENT OF EXTERNAL AFFAIRS, CANADA. *(FILE COPY)*

NUMBERED LETTER

TO: The Permanent Delegation of Canada to the United Nations, New York.

FROM: THE UNDER-SECRETARY OF STATE FOR EXTERNAL AFFAIRS, OTTAWA, CANADA.

Reference: Your 922 of December 15, 1953

Subject: Filing Cabinets

Security: CONFIDENTIAL

No: D-782

Date: Dec. 21, 1953.

Enclosures:

Air or Surface Mail:

Post File No:

Ottawa File No.	
50048-AF-40	
59	50

References

I have today ordered ~~one~~ 2 Preston enclosure cabinets and ~~one~~ 2 four-drawer cabinets to go inside, to be sent to you without delay. The Preston enclosure cabinet gives protection comparable to the Chubb safe file except that it is not fireproof. I hope these will meet your present needs.

highest security (category 1)

D. W. MUNRO

For the Acting Under-Secretary of State for External Affairs

Internal Circulation

Distribution to Posts

Ext. 181B (Rev. 2/52)

Document disclosed under the *Access to Information Act*
Document divulgué en vertu de la *Loi sur l'accès à l'information*

DEPARTMENT OF EXTERNAL AFFAIRS

MEMORANDUM

TO: Supplies and Properties Division

FROM: Defence Liaison (2) Div./PVLyon/mb

REFERENCE: Original on 50048-40

SUBJECT:

Security CONFIDENTIAL

Date Dec. 21,1953.

File No. ~~[illegible]~~ 50048-AF-40 V

59	✓	

Please arrange the despatch of one Preston enclosure cabinet and one four-drawer cabinet to the Canadian Permanent Delegation to the United Nations, New York; please send also one of each to the Consulate General in New York. These are further additions to the list of seventeen submitted to you a week ago.

D. W. MUNRO

Defence Liaison (2) Division

Ext. 326
(2/53)

Document disclosed under the *Access to Information Act*
Document divulgué en vertu de la *Loi sur l'accès à l'information*

DEPARTMENT OF EXTERNAL AFFAIRS, CANADA.

NUMBERED LETTER

TO: THE UNDER-SECRETARY OF STATE FOR EXTERNAL AFFAIRS, OTTAWA, CANADA.

FROM: THE CANADIAN PERMANENT DELEGATION TO THE UNITED NATIONS, NEW YORK.

Reference:

Subject: Request for authority to purchase a filing cabinet for Delegation use.

Security: UNCLASSIFIED

No: 922

Date: December 15, 1953.

Enclosures: —

Air or Surface Mail: Courier.

Post File No:

Ottawa File No.	
50048-AF-40	
52	50

SUPPLIES AND PROPERTIES
D-2
References
DEC 18 1953
21 DEC 1953
DEC 17 1953

Mr Ryan

action taken

file on 50048 AF-40

Our Delegation filing cabinets have become so crowded that we find it necessary to request authority to purchase a four-drawer filing cabinet with bar. My letter No. 1368 of October 15, 1952 - Estimates 1953-1954, paragraph 2, advised you that in the near future we would require additional cabinets.

2. The New York price for a cabinet such as this is $105.00.

3. I would be grateful if you would issue, in due course, the necessary authority.

PERMANENT DELEGATION.

Internal Circulation

F

Distribution to Posts

Ext. 182A (Rev. 2/52)

Document disclosed under the *Access to Information Act*
Document divulgué en vertu de la *Loi sur l'accès à l'information*

DEPARTMENT OF EXTERNAL AFFAIRS, CANADA. *(DUPLICATE)*

NUMBERED LETTER

TO: THE UNDER-SECRETARY OF STATE FOR EXTERNAL AFFAIRS, OTTAWA, CANADA.

FROM: THE CANADIAN PERMANENT DELEGATION TO THE UNITED NATIONS, NEW YORK.

Reference: Your teletype No. 625 of Dec. 9/53.

Subject: Telephone tie-line to U.N. Building.

ATTENTION: MR. CREAN

Security: SECRET

No: 913

Date: Dec. 11, 1953.

Enclosures:

Air or Surface Mail: Courier.

Post File No:

Ottawa File No. This copy for 50048-AF-40

54 | 54 F-1-40

References

Origination 5-10-0 "F"

As requested I have discussed the above matter with Major Dean and Mr. Shears of the U.K. Delegation. There is not much I can add to my previous letter No. 897 of November 30.

2. Major Dean's comments were as follows:

> "There would be no security - any more than there is with any other telephone communication line. The line would provide a direct link which would, of course, be more convenient than phoning through the switchboard or private wire. A direct line such as this would by-pass the Judson exchange but would give no security since anyone with the proper equipment could listen in on the conversation".

It might prove economical to a certain extent in that it would reduce our monthly telephone account.

3. Mr. Campbell of the United Kingdom Delegation confirmed that they have a similar tie-line.

Internal Circulation

M.H. COLEMAN

PERMANENT DELEGATION.

Mr. Zaukie:
If we have the funds I think that this might as well be authorized.
Please let me have a copy of your letter to N.Y. for file 50048-AF-40
DEDM

Distribution to Posts

Ext. 182C (Rev. 2 /52)

Document disclosed under the Access to Information Act
Document divulgué en vertu de la Loi sur l'accès à l'information

Defence Library

DEPARTMENT OF EXTERNAL AFFAIRS, CANADA.

(DUPLICATE)

FILE COPY

NUMBERED LETTER

RESTRICTED

TO: The Canadian Permanent Delegation to the United Nations, New York, U.S.A.

FROM: THE UNDER-SECRETARY OF STATE FOR EXTERNAL AFFAIRS, OTTAWA, CANADA.

Reference:

Subject: Four-Wheel Combination Dial Lock

Security:

No: D-660

Date: October 6, 1953

Enclosures: 2

Air or Surface Mail: Air

Post File No:

Ottawa File No. ~~50048-1-40~~ 50048-AS-40

32 | 58

References

Internal Circulation

Distribution to Posts

I herewith attach a breakdown of the four-wheel combination dial lock on your model 221C or 222 safe together with a direction sheet for operating this lock. This illustrated chart is sent to your Mission in order to facilitate the task of any of your officers or of an authorized lock expert who may have to take apart and re-assemble the lock either for repairs or cleaning purposes.

2. We believe this breakdown to be sufficiently clear to enable any officer or Ottawa-based member of your staff who has had some training in locks to clean the mechanism of the lock without having recourse to the help of a local locksmith. This cleaning could very well be done at the same time that the combination settings are changed, i.e., every three months.

3. Particular attention is drawn to the fact that no oil should be put inside the lock elsewhere than on each of the two posts inside the lock case. Under no circumstances should you use more oil on the lock. There is real danger that if the oil gets in between the tumblers they will slip and you will be unable to open the safe. If the lock has to be examined by an expert, he should take care to remove any oil which might have got into the mechanism.

for the Donald D. Munro

Acting Under-Secretary of State for External Affairs.

Ext. 181C (Rev. 2/52)

Document disclosed under the *Access to Information Act*
Document divulgué en vertu de la *Loi sur l'accès à l'information*

50048-A5-40

4th Floor

Aug. 20/53

(Copy for Registry)

Encl. to Memo of Aug. 20/53 to D.R. (2) from Finance Div.

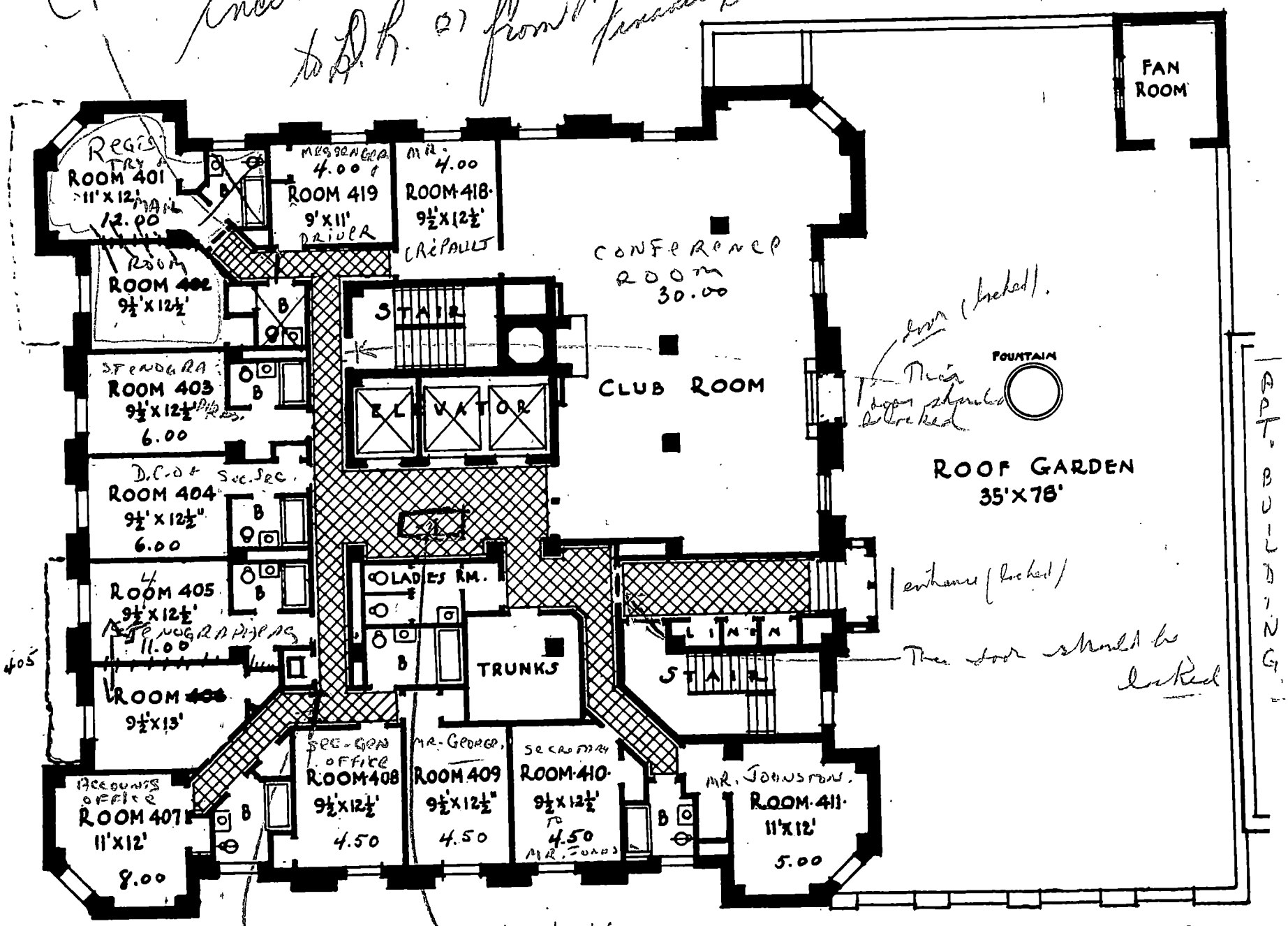

door with special lock (Key only accessible)

Table & telephone for Security Guards

181 19
W 03

Document disclosed under the Access to Information Act
Document divulgué en vertu de la Loi sur l'accès à l'information

Defence Liaison (2): J. M. Dery/JG

DEPARTMENT OF EXTERNAL AFFAIRS, CANADA. (FILE COPY)

NUMBERED LETTER

TO: The Permanent Delegation of Canada to the United Nations, New York

FROM: THE UNDER-SECRETARY OF STATE FOR EXTERNAL AFFAIRS, OTTAWA, CANADA.

Reference: Your Letter #798 of September 8, 1953

Subject: Security Precautions at the Permanent Delegation

Security: CONFIDENTIAL

No: D - 633

Date: September 22, 1953

Enclosures:

Air or Surface Mail: Air

Post File No:

Ottawa File No. 50048-AF-40

52 | 50

References

FILE COPY

Since the Rockefeller Centre Building Service is prepared to allow you to replace the glass panel door to the Records Room with a solid metal door and transom, I believe you should make the necessary arrangements to have these modifications effected as soon as possible, preferably, as you pointed out, before the conclusion of the 8th Session of the General Assembly. Furthermore, as soon as we are informed how many keys are needed, we will provide a lock for the new door. Expenses incurred in having the door replaced should be coded in your accounts to vote No. 313-14-201.

Internal Circulation

J. R. MITCHELL

Acting Under-Secretary of State for External Affairs

Distribution to Posts

Ext. 181B (Rev. 2/52)

Document disclosed under the Access to Information Act
Document divulgué en vertu de la Loi sur l'accès à l'information

Defence Liaison (2): J.M. Dery/JG

DEPARTMENT OF EXTERNAL AFFAIRS

MEMORANDUM

File/Room.

TO: SUPPLIES & PROPERTIES DIVISION

FROM: Defence Liaison (2) Division

REFERENCE:

SUBJECT:

Security

Date September 22, 1953

File No. 50048-AF-40

52 50

I enclose for your signature if you approve a letter to the Canadian Permanent Delegation to the United Nations authorizing them to further increase their security arrangements by replacing the present glass panel door of the Records Room with a solid metal door and transom.

SUPPLIES AND PROPERTIES

1	
2	
3	
4	
5	
6	
7	
8	
9	
SEP	23 1953

Donald M. Munro

Defence Liaison (2) Division

000279

Ext. 326
(2/53)

Document disclosed under the *Access to Information Act*
Document divulgué en vertu de la *Loi sur l'accès à l'information*

DEPARTMENT OF EXTERNAL AFFAIRS, CANADA.

NUMBERED LETTER

TO: THE UNDER-SECRETARY OF STATE FOR EXTERNAL AFFAIRS, OTTAWA, CANADA.

FROM: The Permanent Delegation of Canada to the United Nations, New York.

Reference: Your letter No. D.580 of August 21

Subject: Security Precautions at the Permanent Delegation.

Security: CONFIDENTIAL

No: 198

Date: September 8, 1953.

Enclosures:

Air or Surface Mail:

Post File No:

Ottawa File No. 50048-AF-40

57 | 50

D-2

References

1
2
3
4
5
6
7
8
9
10

10 SEP 1953

File

The second paragraph of your letter under reference indicates that you believe the Delegation Records Room to be separated from the rest of the Delegation premises by a solid door which may be locked to deny access to the Room to non-members of the Delegation staff.

2. In fact the door of the Records Room is, like those of the other offices in the Delegation premises, of the glass panel type with a glass transom over it. Moreover the charwomen and night watchmen of Rockefeller Centre have pass keys to all the rooms and therefore the fact that the door was locked would not be a hindrance to them.

I think this should be done. We will provide the lock. The Department cannot furnish keys. Delegation keep them.

3. We have enquired from the Rockefeller Centre Building Service and find that they would be prepared to allow us to fit a solid metal door and transom to the Records Room and to change the lock on the door so that building staff may not obtain access to the Records Room. It would be possible to arrange for the cleaning of the Room under supervision of a member of the Delegation staff.

4. If you consider that we should take steps to isolate the Records Room from the building staff I think that the action I have outlined might be taken before the return of the Delegation records to their present room on the conclusion of the 8th Session of the General Assembly. Possibly you may have some comments to offer us on this question and I should be pleased to receive them.

Internal Circulation

Distribution to Posts

10

David M. Johnson
Permanent Delegation.

Ext. 182A (Rev. 2/52)

Defence Liaison (2) J.M. Berry/jm
Document disclosed under the Access to Information Act
Document divulgué en vertu de la Loi sur l'accès à l'information

DEPARTMENT OF EXTERNAL AFFAIRS, CANADA. *(FILE COPY)*

NUMBERED LETTER

TO: The Permanent Delegation of Canada to the United Nations, New York

FROM: THE UNDER-SECRETARY OF STATE FOR EXTERNAL AFFAIRS, OTTAWA, CANADA.

Reference: Your Letter No. 663 of July 22, 1953

Subject: Security Precautions at the Permanent Delegation

Security: CONFIDENTIAL

No: D-580

Date: August 21, 1953

Enclosures:

Air or Surface Mail: Air

Post File No:

Ottawa File No.	
50048-AF-40	
59	50

References

The problem raised in paragraph 4 of your letter has recently been raised also by our United Nations Delegation in Geneva. We fully understand that, because of present arrangements with regard to charwomen and night watchmen, it is difficult to give an unconditional guarantee that, from this quarter, there is no cause for concern.

2. As a means of circumventing this awkward situation and thereby increasing your security, I recommend that you have all classified material locked away after working hours in the Records Room to which you can deny access to all but Ottawa-based personnel, except in certain circumstances when the char staff, for example, might be admitted under the supervision of a member of your Ottawa-based staff.

Internal Circulation

D.W. MUNRO

for the Acting Under-Secretary of State for External Affairs

Distribution to Posts

Ext. 181B (Rev. 2/52)

Document disclosed under the Access to Information Act
Document divulgué en vertu de la Loi sur l'accès à l'information
Defence Liaison (2) - J. M. Dery/16

DEPARTMENT OF EXTERNAL AFFAIRS, CANADA. *(FILE COPY)*

NUMBERED LETTER

TO: The Permanent Delegation of Canada to the United Nations, New York, U.S.A.

FROM: THE UNDER-SECRETARY OF STATE FOR EXTERNAL AFFAIRS, OTTAWA, CANADA.

Reference: Your Letter No. 745 of August 17

Subject: Chubb Safe Filing Cabinet

Security: CONFIDENTIAL

No: D - 562

Date: August 19, 1953

Enclosures:

Air or Surface Mail: Air

Post File No:

Ottawa File No. 50048-AF-40

59 | 50

References

An order has recently been placed with Chubb & Sons for a new shipment of safe filing cabinets, and we shall endeavour to have one of these cabinets allotted to your Mission as soon as we receive word from London that the shipment is ready for distribution. In this connection may I point out with reference to paragraph 1 of our Letter No. D-242 of March 28, 1953, that since the Remington-Rand cabinet offers slightly less security than the Chubb cabinet, we now buy only the latter kind of safe filing cabinets.

D. W. MUNRO

for the Acting Under-Secretary of State for External Affairs

Internal Circulation

Distribution to Posts

Ext. 181B (Rev. 2/52)

Document disclosed under the *Access to Information Act*
Document divulgué en vertu de la *Loi sur l'accès à l'information*

DEPARTMENT OF EXTERNAL AFFAIRS, CANADA.

NUMBERED LETTER

TO: THE UNDER-SECRETARY OF STATE FOR EXTERNAL AFFAIRS, OTTAWA, CANADA.

FROM: THE CANADIAN PERMANENT DELEGATION TO THE UNITED NATIONS, NEW YORK, N.Y.

Reference: Your letter D-242 of March 28 and our letter No. 341 of April 13/53.

Subject: Chubb Safe Filing Cabinet.

Security: CONFIDENTIAL

No: 745

Date: August 17, 1953.

Enclosures:

Air or Surface Mail: Surface.

Post File No:

Ottawa File No. 50048-AF-40

52 | 58

References

DN

1	
2	
3	
4	
5	
6	
7	
8	
9	
10	

18 AUG 1953

Internal Circulation

Distribution to Posts

10

In our letter under reference you were advised that we intended at a future date to review the security situation in our Delegation. Whereas, at that time, we expressed the opinion that there was no need for any additional repository for classified documents, we have again carefully reviewed our requirements and have reversed our original opinion and feel that our needs are not completely met with our present equipment.

2. A second Remington Rand cabinet, similar to the one we now have, would best suit our requirements. As previously pointed out it has been necessary for us to loan to Mr. Pearson, and his staff, our present Remington Rand cabinet and because of this our requirements have changed.

3. We would, therefore, ask you to reconsider supplying this Delegation with an additional Remington Rand cabinet.

Chubb
for 'A' file

David M. Johnson
PERMANENT DELEGATION.

Q 5
File

Ext. 182A (Rev. 2/52)

Document disclosed under the *Access to Information Act*
Document divulgué en vertu de la *Loi sur l'accès à l'information*

Document disclosed under the Access to Information Act
Document divulgué en vertu de la loi sur l'accès à l'information

DEPARTMENT OF EXTERNAL AFFAIRS, CANADA.

Secret! Please! The under red sheet K

NUMBERED LETTER

TO: THE UNDER-SECRETARY OF STATE FOR EXTERNAL AFFAIRS, OTTAWA, CANADA.

FROM: THE PERMANENT DELEGATION OF CANADA TO THE UNITED NATIONS, NEW YORK.

Reference: My letter No. 341 of April 13, 1953.

Subject: Security precautions at the Permanent Delegation.

Security: CONFIDENTIAL

No: 663

Date: July 22, 1953.

Enclosures:

Air or Surface Mail:

Post File No: Security.

Ottawa File No.

50048-AF-xc

52 | 37

References

D-2

1
2
3
4
5
6
7
8
9
10

23 JUL 1953

Internal Circulation

Distribution to Posts

10

1. In my letter No. 341 I said that when there was more time to attend to internal office matters at the Delegation I would review the security situation and let you have my comments.

2. As you know, the Permanent Delegation occupies a suite of offices on the fifth floor of the British Empire Building of Rockefeller Centre. There is only one entrance to this suite: the door contains a single large panel of opaque glass. There is also a small transom window opening into the file room but s ometime ago, on the advice of Mr. Victor Moore, the glass in the transom was replaced by a metal insert.

File

3. "Top Secret" material is kept in the Records Room safe. This material is locked up in the safe after working hours each day while other classified material is locked up after working hours in the locked filing cabinets (barred and padlocked) of the Records Room or of the individual officers of the Delegation. I believe these practices comply with the spirit of paragraph 210.1(a) of Departmental Regulations and Instructions. So far as security containers are concerned, I believe we have adequate room at the moment for the amount of classified material in our possession.

4. My chief concern, however, is the fact that we must rely completely on the protective staff of Rockefeller Centre to ensure that no unauthorized persons enter our suite of offices after business hours. Our experience is that the charwomen and night watchmen are reliable but since they are not Canadian citizens or employees of the Canadian Government, I cannot guarantee the complete security of the Delegation offices.

5. I imagine that the situation I have outlined exists in the cases of several other Canadian posts abroad. While this Delegation has not to my knowledge suffered any security breaches, I should be grateful to have your comments on the situation.

.... 2.

182A (Rev. 2/52)

Document disclosed under the *Access to Information Act*
Document divulgué en vertu de la *Loi sur l'accès à l'informatio*

Possibly one of the officers of Defence Liaison (2) Division might arrange to visit the Delegation in due course to let us have expert advice on optimum security measures which might be adopted for a post in a public office building.

David M. Johnson
PERMANENT DELEGATION.

Document disclosed under the *Access to Information Act*
Document divulgué en vertu de la *Loi sur l'accès à l'information*

Ext. 132A

OTTAWA FILE
No. 50048-AF-26

56 52 50

SECURITY CLASSIFICATION
CONFIDENTIAL

D-2

Letter No. 341

Date April 13, 1953.

FROM: THE PERMANENT DELEGATION OF CANADA TO THE UNITED NATIONS NEW YORK

TO: THE UNDER-SECRETARY OF STATE FOR EXTERNAL AFFAIRS, CANADA

Reference Your letter No. D242 of March 28

Subject: Chubb Safe File Cabinet

15 APR 1952

Copies Referred To.....

No. of Enclosures .....

Post File No.....

We are grateful for your offer of an additional Chubb safe file cabinet.

2. Since we realize you may have several other Missions in mind to which the cabinet might be sent we have weighed very carefully the factors affecting the security of the Delegation before deciding whether we really require the additional cabinet. The other officers here have agreed with me that an additional cabinet is not really needed by the Delegation at the present time. As you know we have a large safe in the records room and also a Remington Rand cabinet which is used by my secretary. The safe is sufficiently large to hold all our highly classified material as well as cash, stamps and other valuables. The Remington Rand cabinet is more than sufficient to hold my own classified files and in fact I generally lend it to Mr. Pearson's staff when he comes to New York to attend the General Assembly: on these occasions my own files are locked in the record room safe.

3. I cannot forsee at this time that we shall be requiring additional security containers in the near future. However when the present session of the General Assembly is over and we have more time to attend to office matters I intend to review the security situation in the Delegation and possibly at that time I shall write to ask for your comments and suggestions on improvements which might be made in our local security measures.

David M. Johnson
Permanent Delegation.

10

File PED

Document disclosed under the *Access to Information Act*
Document divulgué en vertu de la *Loi sur l'accès à l'information*

MAR 15 AM 10:35

Document disclosed under the Access to Information Act
Document divulgué en vertu de la Loi sur l'accès à l'information

DEF.LIAISON(21)/P.C. DOBELL/EIS

DEPARTMENT OF EXTERNAL AFFAIRS, CANADA. (FILE COPY)

NUMBERED LETTER

TO: THE CANADIAN PERMANENT DELEGATION TO THE UNITED NATIONS, NEW YORK, N.Y.

FROM: THE UNDER-SECRETARY OF STATE FOR EXTERNAL AFFAIRS, OTTAWA, CANADA.

Reference:

Subject: Chubb Safe File Cabinet

Security: CONFIDENTIAL

No: D 242

Date: March 28, 1953.

Enclosures:

Air or Surface Mail:

Post File No:

Ottawa File No. 50048-AF-40

32 | 50

References

Internal Circulation

Distribution to Posts

We are planning to send you a Chubb safe file cabinet and are anxious to know if it will be of use to you and if your Mission will be able to accommodate it. If you already have one, or a Remington Rand cabinet which, though similar in shape and design, offers slightly less security, you will know what they are like. In case you are not familiar with them, they are slightly larger than an ordinary 4-drawer filing cabinet, (21" x 32" x 58") and they weigh about 850 lbs. uncrated.

Would you please inform us, if necessary after consultation with a local contractor, whether the floor of your chancery will support the weight of such a cabinet. Would you also tell us candidly if you do not think that you will need the cabinet, since there are other missions to which it could be sent. However, we have selected your Mission because we believe from our records that it needs additional security equipment.

Finally, would you let us know if you think that you will be requiring additional security containers in the near future. This information will assist us in assessing our future requirements.

W. MUNRO

for the Under-Secretary of State for External Affairs.

Ext. 181B (Rev. 2/52)

Document disclosed under the Access to Information Act
Document divulgué en vertu de la Loi sur l'accès à l'information

Original on 50048-N-40

Ext. [redacted]2 C

~~DUPLICATE~~

50048-AF-40
52-52

OTTAWA FILE
No. ~~5100-40~~

SECURITY CLASSIFICATION

Letter No. 10

Date January 5th, 1953

FROM: THE CANADIAN CONSULATE GENERAL, NEW YORK, N.Y., U.S.A.

TO: THE UNDER-SECRETARY OF STATE FOR EXTERNAL AFFAIRS, CANADA

Reference: Circulat. Document. B.116/51. and B.60/52

Subject: Instructions regarding combination locks.

Enclosed, in a separate, sealed envelope, is a list of the settings for combination locks for the Consulate General and the Permanent Delegation.

M. H. COLEMAN

Consulate General

Copies Referred To

No. of Enclosures
ONE

Post File
No.

Document disclosed under the *Access to Information Act*
Document divulgué en vertu de la *Loi sur l'accès à l'information*

Mr. Raymond to see file

J. M. WEST
J. T. WEST, B.A.Sc.

H. T. WEST
T. M. WEST, B.A.Sc.

J. & J. TAYLOR LIMITED
TORONTO SAFE WORKS

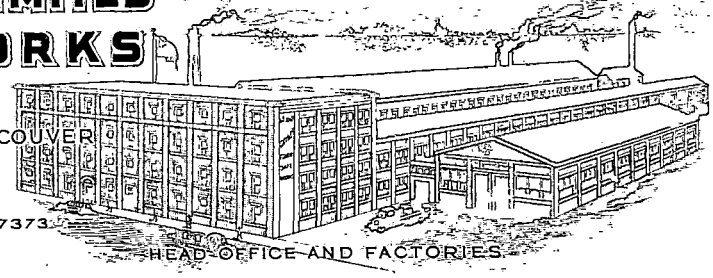

ESTABLISHED 1855
TORONTO · MONTREAL · WINNIPEG · VANCOUVER

CABLE ADDRESS
"TAYLOR, TORONTO."

TELEPHONE
EMPIRE 4-7373

HEAD OFFICE AND FACTORIES
145 FRONT ST. EAST
TORONTO 2, CANADA.

AGREEMENTS AND CONTRACTS SUBJECT TO STRIKES ACCIDENTS AND OTHER CAUSES OF DELAY UNAVOIDABLE OR BEYOND OUR CONTROL

October 14, 1952

50048-AF-40
Sub. 77 Chron. 77 Filed....

Department of External Affairs,
Ottawa, Ont.

Gentlemen:

Your telegram of October 13th was received on Thanksgiving Day and telephoned to one of our officials reading as follows:-

> "CAN YOU SEND TO NEW YORK AS A MATTER OF URGENCY A MECHANIC TO REPAIR WHAT APPEARS TO BE A JAMMED HINGE ON THE DOOR OF A TAYLOR SAFE LOCATED IN THE OFFICE OF THE CANADIAN PERMANENT DELEGATION TO UNITED NATION 620 FIFTH AVE NEW YORK 20. ALTERNATIVELY CAN YOU RECOMMEND A RELIABLE FIRM IN NEW YORK WHO COULD DO THE JOB. PLEASE REPEAT REPLY TO NEW YORK."

We notice now in the printed copy of the message the word, "Repeat" is given as the fifth word from the end of message. This word was not noticed when the telephone message was given, we therefore sent a telegram at once to the Canadian Permanent Delegation to United Nations reading as follows:-

> "REFERENCE TELEGRAM TO US FROM OTTAWA REGARDING SAFE WE COULD SEND REPRESENTATIVE TUESDAY NIGHT IF INSTRUCTED. WE SUGGEST YOU TELEPHONE US TORONTO EMPIRE 4-7373 TUESDAY MORNING."

We have been speaking to the New York office today and learned that the safe is locked closed, although it appears that the locks are open. We have arranged to send a representative tonight to New York, Mr. W. E. Creighton, to open the safe and have a telegram from New York instructing us to do so.

We trust all of the above meets your approval.

Yours truly,

J. & J. TAYLOR, Limited.

WDC:EA P.S.--Since writing the above we have been in touch with your Mr. Munroe who has approved our action in connection with the above. Also we have received his request to have someone call in due course and discuss with your mechanical difficulties in connection with safes which you are using.

Document disclosed under the Access to Information Act
Document divulgué en vertu de la Loi sur l'accès à l'information

Ext. 27R

Please place on file - 50048-AF-40
Cf. Jf.

Ottawa, October 8, 1952.

FROM: THE DEPARTMENT OF EXTERNAL AFFAIRS, CANADA

TO: Canadian Delegation, General Assembly, New York.

50048-AF-40
59

We are forwarding by (Courier) the following:-

4 (Four) Despatch Cases, Nos. 74,
~~81~~, ~~82~~, ~~87~~, with 8 Keys,
No. 48, as requested.

Returned

When the above has been received and checked, would you kindly sign and return the original form EXT. 27 R.

for Under-Secretary of State
for External Affairs

Attention:

Mr. J.E.Gougeon, Dept. of External Affairs, Room 250, East Block, Ottawa, Ontario.

This is to certify that the above mentioned items have been received in good order.

CANADIAN CONSULATE GENERAL
NEW YORK, N.Y.
Place
OCT 13 1952
Date
FILE No.

Esther McGoff
Signature

Document disclosed under the *Access to Information Act*
Document divulgué en vertu de la *Loi sur l'accès à l'information*

CONFIDENTIAL

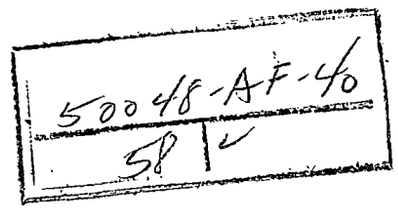

CIRCULAR DOCUMENT

NO. B.60/52

Ottawa, June 3, 1952.

Instructions Regarding Combination Locks

This document has been prepared in order to amplify the instructions contained in Circular Document B.116/51 of December 29, 1951. I suggest, therefore, that a note be placed on the earlier Circular Document drawing attention to the fact that it has been to some extent amended by this one.

Missions are now submitting the details of the settings which have been put on Taylor, Chubb, and Remington Rand safe containers in accordance with the instructions outlined in Circular Document B.116/51. Unfortunately, however, (and on this point the earlier Circular Document was not clear) these details are being embodied in the text of a despatch with the result that we are faced with an awkward filing problem. Furthermore, as you probably keep on file a copy of that despatch, you are increasing the security hazards by having in your own files a clearly identifiable copy of those settings.

In the interests of removing this risk, I should be grateful if, when in the future you have occasion to transmit the details of your new setting, you do so under cover of a separate despatch, the setting and the container to which it refers being recorded on a plain slip of paper of which you need not keep a copy. The slip of paper containing the setting should be placed in a separate envelope, sealed and marked "To be Opened only by the Departmental Security Officer".

for Acting Under-Secretary of State
for External Affairs.

To the Heads of
Canadian Posts Abroad.

Document disclosed under the *Access to Information Act*
Document divulgué en vertu de la *Loi sur l'accès à l'information*

Ext. 182

~~DUPLICATE~~
50048-AF-40
49 ✓

OTTAWA FILE
No.

Letter No. 26 orig on 50048-N-40

SECURITY CLASSIFICATION
SECRET

Date January 14, 1952

FROM: THE CANADIAN CONSULATE GENERAL, NEW YORK CITY

TO: THE UNDER-SECRETARY OF STATE FOR EXTERNAL AFFAIRS, CANADA

Reference: Circular Document No. B.116/51 of December 29, 1951.

Subject: Instructions Regarding Combination Locks.

Copies Referred To

No. of Enclosures

Post File No.

1. The responsibility for changing and recording the combination of dial locks for both the Permanent Delegation and the Consulate General has been, for simplicity, charged to Mr. Warren of the Communications Section. In view of this it is intended that the reports from this Consulate General will also include the reports for the Permanent Delegation. The local record of combinations is contained in a book which is kept in the inner locked cabinet in the Communications Office safe.

2. For ease in reporting future changes it was deemed advisable to allocate a number to each particular safe and to give a description of each, including location, lock numbers where applicable, as well as the procedure to open. In future reports it should then be necessary only to list the new numbers allotted to each dial lock.

3. Safe No. 1 is a Herring-Hall-Marvin Co. (Hamilton, Ohio) safe with a Yale lock. This safe originally belonged to the Newfoundland Office, is now the property of the Department of Trade and Commerce, and is being used by our Consular Section. The combination is rather difficult to change and on previous occasions it has been possible to change only two of the numbers and these by only a few digits. When this safe was in the possession of the Newfoundland Office, the combination was changed only once by a locksmith and there are no instructions available. The present combination, set on January 8, 1952, is 3 left to 75, 3 right to 18, 2 left to 35, then right to zero.

4. Safe No. 2 is marked "T.H.S. Co. Cincinnati" (probably made by Hall Safe Co. of Cincinnati) and the number on the handle is 95198. This safe is located in Mr. Lowrey's office, is the property of the Department of Trade and Commerce, and is being used by the External Affairs Accounts Section. The combination has not been changed for a number of years and when last examined it appeared as though it was not possible to change it without special tools. There are no instructions available. There is a considerable amount of cash kept in this safe consisting of Mr. Greene's cash fund amounting to $100, the Consulate petty cash fund of $50, the Delegation petty cash fund of $25, and unofficial funds for payment of cigarette and liquor accounts which at times runs into several hundred dollars. Since we are not able to change the combination, should a locksmith be called in to change it periodically (as was done on one occassion years ago), or, in view of the fact that no security material is kept in this safe, should we

Document disclosed under the *Access to Information Act*
Document divulgué en vertu de la *Loi sur l'accès à l'information*

assume that it is sufficiently secure for its purpose and continue to use the safe with its present combination indefinitely? Your comments would be appreciated. The combination at present is 4 left to 44, 3 right to 67, 2 left to 15.

5. Safe No. 3 is a Sargent and Greenleaf safe filing cabinet, lock No. M6730-MP and is located in the office of the Permanent Delegate. This is a new cabinet and there is no difficulty in changing combination which at present is 4 left to 13, 3 right to 65, 2 left to 34, right to zero and turn spindle key to right to open.

6. Safe No. 4 is a J & J Taylor safe, upper lock No.2674, lower lock No.2684 and is located in the Registry Section of the Permanent Delegation. There is no difficulty in changing combinations which at present are, for the upper lock, 5 right to 29, 4 left to 46, 3 right to 95, 2 left to 78, right to stop, and for the lower lock, 5 right to 94, 4 left to 69, 3 right to 57, 2 left to 82, right to stop.

7. Safe No. 5 is a Sargent and Greenleaf safe, door handle number 7567, located in the Communications Section. There is no difficulty in changing the combination which at present is 4 left to 46, 3 right to 57, 4 left to 82, right to stop.

8. Safe No. 6 is a J & J Taylor safe, upper lock No. LF347, lower lock No. LF348, located in the Communications Section. There is no difficulty in changing the dombinations which at present are, for the upper lock, 5 right to 45, 4 left to 62, 3 right to 31, 2 left to 91, right to stop, and for the lower lock, 5 right to 56, 4 left to 23, 3 right to 19, 2 left to 86, right to stop.

9. Safe No. 7 is a large two-door Herring-Hall-Marvin safe located in the sub-basement store room. This safe was inherited from the previous tenant of our storage space, the Speers diamond company, because it was considered too expensive to move. This safe is being used only as a cupboard, the lock on the outer door having been disabled by the removal of the tumbler. There is an inner two-door safe which has never been opened and the combination is not available. It appears as though the combination on the outer door could be quite easily changed but no instructions are available.

10. All combinations with the exception of Safe No. 2 were changed on January 8th and will continue to be changed every three months. The persons using the safes in the Consulate and Delegation have been informed of the contents of this Circular Document and every effort will be made to see that the instructions contained therein will be strictly adhered to.

Consulate General

Document disclosed under the Access to Information Act / Document divulgué en vertu de la Loi sur l'accès à l'information

Defence Liaison (2)/G. de T. Glazebrook/mmp. Ext. 181B

FILE COPY

[redacted]

OTTAWA FILE
No. 50048-AF-40
58 50

SECURITY CLASSIFICATION
CONFIDENTIAL

Letter No. D-1599

Date November 17, 1951.

FROM: THE UNDER-SECRETARY OF STATE FOR EXTERNAL AFFAIRS, CANADA

TO: THE PERMANENT DELEGATION OF CANADA TO THE UNITED NATIONS NEW YORK.

Reference Your letter No. 1289 of November 7, 1951.

Subject: Security Arrangements.

Copies Referred To.....

No. of Enclosures .....

Post File No.....

I am glad to know that on the whole you will find it possible to apply the security rules outlined in Circular A.74/51.

2. We have no record of a request that one of your drivers (Krug) should carry the diplomatic bags. As I think you know, there is a rule against allowing any employee to handle classified material unless he has been posted from Ottawa and has a security clearance. In exceptional circumstances, we are prepared to consider giving a clearance on other persons, but require to have the information here. No doubt, from the facts you give, this man would be quite satisfactory, but it is necessary that all available information should be sent here since a security clearance can be granted only in the Department in Ottawa. I appreciate the desirability of having two drivers entitled to perform these duties, but we do not wish to entrust the diplomatic bags to persons who are not authorized to receive them. If, therefore, you will send us all the information you have on Krug, we will make any further necessary enquiries and consider a security clearance. Meanwhile you could arrange that some member of the regular staff should accompany Krug to the Grand Central Station on the occasions on which the other driver is not available to take the bags.

3. Classified material carried from floor to floor is preferably carried in locked cases to ensure that the cases do not fall open by mistake. Alternatively, you may use other cases, provided they are securely latched.

4. Under the circumstances mentioned, it will not be necessary for more than a spot check on the char staff. This arrangement, however, is conditional on the requirements indicated in Circular A. 74/51, concerning the protection of classified material. Provided that you take steps to ensure that all classified material is securely locked in proper containers and that no keys or records of combinations are left unprotected in offices, there is no necessity for a regular supervision of the char staff.

for subseq. corresp. on Krug see Mr. Glazebrook

G. de T. Glazebrook

for the Under-Secretary of State for External Affairs.

Document disclosed under the *Access to Information Act*
Document divulgué en vertu de la *Loi sur l'accès à l'information*

Ext. 182A

50048-AF-40
49 | 50

OTTAWA FILE
No.....

Letter No.....1289.....

Date.....November 7, 1951.

SECURITY CLASSIFICATION
CONFIDENTIAL

FROM: THE PERMANENT DELEGATION OF CANADA TO THE UNITED NATIONS NEW YORK

TO: **THE UNDER-SECRETARY OF STATE FOR EXTERNAL AFFAIRS, CANADA**

Reference...Circular Document A.74/51 of October 19.....

Subject:....Security arrangements.....

D-2

1	
2	
3	
4	
5	
6	
7	
8	
9	
10	

10 NOV 1951

Copies Referred To.....
.....
.....
.....
.....
.....

No. of Enclosures
.....

Post File
No.....

1. The security arrangements outlined in your circular document A.74/51 of October 19 are now being followed as rigidly as possible in the Delegation offices, and the weekly reports you request will be sent in from now on. The situation in the Delegation is, I think, somewhat better than in most missions in that we have no locally engaged personnel located during the day in the offices.

2. Since adherence to the letter of these regulations would entail certain minor difficulties for us, I should like to suggest modifications which the particular conditions here appear to justify. The first is that one of the drivers (who is technically attached to the Consulate staff, and rarely comes upstairs to the Delegation) has been handling the diplomatic bag on a rotational basis with our other driver, a Canadian citizen. I believe that this arrangement had been cleared through you, but I have been unable to find any evidence that this has been done. Since Krug, the driver in question, was subjected to a thorough security check by the F.B.I. before he came to work for us, and since he was a former employee both of the British Admiralty Delegation during the war and of the United States Mission to the United Nations after 1945, I think we are running no risks in allowing him to continue to take the bag on occasion to and from the station. It would be a definite hardship on our other driver if Krug were not allowed to handle the diplomatic bag, since arrangements for picking it up and delivering it make it necessary for the drivers to be at Grand Central Station very early in the morning and fairly late at night six times a week.

3. Another point on which I should like your guidance is whether it is necessary that classified material carried from the Consulate to the Delegation, i.e., from floor to floor in the same building, need be carried in locked cases. We have not been doing so but will initiate this practice if you wish it.

.....

D

Document disclosed under the *Access to Information Act*
Document divulgué en vertu de la *Loi sur l'accès à l'information*

EXTERNAL AFFAIRS
RECORDS CLEARED
1951 NOV 9 PM 3:09

Document disclosed under the *Access to Information Act*
Document divulgué en vertu de la *Loi sur l'accès à l'information*

4. The point about supervision of char staff is a major difficulty as I see it, since they come in to clean during the evening, long after everyone has left. Our cypher room is of course fully protected, but the registry is still being cleaned by the char staff. Since all the files are locked and barred away in the cabinets in accordance with your previous instructions, I wonder whether it would not be possible to relieve us of the responsibility of supervising the work of the char staff in the registry room. We will, as you instructed, make an occasional spot check of their work.

PERMANENT DELEGATION

Document disclosed under the Access to Information Act
Document divulgué en vertu de la Loi sur l'accès à l'information

DUPLICATE

50048-AF-40

OTTAWA FILE No. 50048-N-40
50048-AF-40
~~50048-AS-40~~

Despatch No. 478

Date June 23, 1951

SECURITY CLASSIFICATION

SECRET

FROM: THE CANADIAN CONSUL GENERAL, NEW YORK, N.Y.

TO: THE SECRETARY OF STATE FOR EXTERNAL AFFAIRS, CANADA

Reference: Your Despatch No. D.476 of November 28, 1950.

Subject: Security Arrangements.

Seen by Mr. Macdonald Supplies & Services
Mr. Daley
J. C. MOORE
7 Aug 51

Copies Referred To

No. of Enclosures 2

Post File No.

As the result of Mr. Moore's visit to New York and subsequent letters, the following steps have been taken to improve the security arrangements at this Post.

2. Mr. J.H. Edmonds, who was the locally engaged messenger, has been replaced by Mr. H. Sayer who is a Canadian. Segregation of other locally engaged personnel has been made as complete as possible by the re-location of the offices. A floor-plan showing the location of the various personnel is enclosed for your information. The External Affairs registry has been moved from the large office at the end of the inner corridor, which was more or less open to the public, to an inner office where it is constantly under the surveillance of one of External's Canadian staff members. Mr. Collins, the Trade and Commerce employee, with his stenographer, has been moved into a smaller office adjoining the other Trade and Commerce offices. The cost of the above and other changes in location of offices was negligible and is reflected in our accounts over the past several months.

3. The individual office doors of the Consulate General are equipped with spring type locks, the keys of which, however, are available to the char staff. The only exceptions to this are the doors to the Communications Office and the storage room where the diplomatic bag is retained (this will be covered more fully in later paragraphs). A memorandum dealing with various security matters was circulated to the staff of the Delegation and Consulate General on March 29, 1951, a copy of which is attached for your information. All material is now housed in steel filing cabinets equipped with bars and padlocks, and, if the matter has a high security marking, it is placed in the safe in the Communications Office.

4. All keys for cabinets and doors are carried by the person concerned with their use. If it is necessary that a certain key be made available to another person it is left in the Communications Office safe with instructions as to its disposal. Desks are left unlocked to facilitate a check by the Security Officer.

. . . 2

Document disclosed under the *Access to Information Act*
Document divulgué en vertu de la *Loi sur l'accès à l'information*

5. All wooden cabinets have been replaced by steel ones, equipped with bars and padlocks wherever necessary, and non-locking type cabinets are used only for press clippings and other matter with no security value.

6. Security of the Communications Office is described hereunder:

(a) The locks on both the inner and outer doors were replaced on October 10, 1950, with locks the keys to which are accounted for as follows:

Each of the three members of the Communications staff holds a set of keys. A fourth set is kept in the Communications Office safe for use by the extra person sent here for the General Assembly, and a fifth set of keys (one for the inner and one for the outer door) is sealed in the safe of the Rockefeller Centre Security Office where it can be obtained only in the event of an emergency with the prior consent of either Mr. Coleman or Mr. Warren.

It is possible to seal the inner door of the Communications Office by drilling small holes in the door itself and the door frame (which are of steel construction) and passing a wire through these holes to be sealed with a lead seal similar to that used on the diplomatic bag. For this we would require a hand-sealing device similar to that issued for sealing the diplomatic bag, wire could be obtained locally, and the regular lead bag seals could be used. The sealing device could be locked in the safe in the outer office after use each night.

(b) The glass panels in the door and transom were replaced by steel panels and the transom lock fixed so that it is impossible to open the transom from the outer hallway.

(c) Everyone, with the exception of the Communications staff, is excluded from the Communications Office, and a carpet sweeper has been provided to facilitate the cleaning of these offices by the Communications staff.

(d) The Taylor safe has been moved into the Communications outer office and it has been adapted to contain the reserve of cypher tapes. The overflow of communications material has been put into the Dominion safe in the same room. Spare parts for the equipment are contained in a steel filing cabinet fitted with a lock and copies of telegrams are housed in a steel filing cabinet equipped with bar and padlock in the inner office. The combinations of the two safes are held only by the communications staff and are changed every three months.

(e) We have had no word of the solid covers and padlocks to secure the machines in the inner office as was mentioned in your letter.

The moving of the Taylor safe to the Communications Office has considerably aggravated the cypher office space situation. The removal of the large cage in the inner office has, as you know, been delayed and it is not known at this date when its removal will take place. It is very difficult

Document disclosed under the *Access to Information Act*
Document divulgué en vertu de la *Loi sur l'accès à l'information*

to perform any filing, typing or sorting operations due to the severe shortage of floor space.

7. Classified waste, both from the Communications Office and the Consulate as a whole, is still being burned in the incinerator in the basement by Mr. Warren of the Communications staff. This is, to say the least, a distasteful operation, particularly in the summer months when the temperature in the room approaches 100 degrees and the smoke and ashes are blowing around. Mr. Desjardins similarly disposes of Delegation classified material. It would be greatly appreciated if some other system could be devised to relieve Mr. Warren and Mr. Desjardins of this unpleasant chore.

8. Registers have been set up and signatures are obtained for secret teletypes and for the copies of incoming top secret teletypes. The latter are accounted for and numbered.

9. The procedure followed in handling of the diplomatic bag has been improved. All Consulate diplomatic mail is in the custody of Miss McGoff until such time as it is placed in the bag. The bags are placed in the locked inner supply room. The keys have been issued to Miss McGoff, Mr. Desjardins of the Delegation, the driver of the Delegation car, Mr. M.H. Coleman, and a spare key is locked in the safe of the Rockefeller Centre Security Office (with an arrangement similar to that for keys to the Communications Office). The glass panels in the door and transom of this room have also been replaced with steel panels. The room is kept continually locked and the driver picks up the bag from this room after hours. The drivers' responsibilities have been explained to them in detail and they are adhering strictly to these regulations.

10. The incoming bag is placed in the locked room by the driver who brings it from the station. Miss McGoff, Mr. Sayer or Mr. Lowrey (if Miss McGoff is away) are the only ones who have access to the incoming bag mail and the mail is distributed by them alone.

11. Telephone security is covered in the penultimate paragraph of my memorandum of March 29, 1951, a copy of which is enclosed (see paragraph 3, above).

12. Steps have been taken to set up a civilian defence organization and instructions issued on the procedure to follow in case of an atomic or other bombing attack on New York. The aspect of security precautions both during test alerts and in the event of an actual air raid seems to be open to some discussion. The wardens for the Consulate General and the Delegation have been instructed to check to see that no security material has been left around the offices and to see that no outsiders, who might have happened to visit the Consulate or Delegation just before an alert, are able to take advantage of the occasion to look over papers left behind in the rush for shelter. The question as to what should be done regarding communications equipment would seem to be one of paramount importance. Instructions were issued when the equipment was first installed as to the procedure to follow in case of possible capture of the equipment by some enemy force. Tools are available to completely destroy the equipment. However,

. . . 4

Document disclosed under the *Access to Information Act*
Document divulgué en vertu de la *Loi sur l'accès à l'information*

in the event of a bombing attack, it seems extremely doubtful that time would be available in which to desroy the equipment. The instructions as they stand at the moment are for the Communications staff to ensure that all documents are locked in the safes and cabinets available, to ensure that all the power is turned off and to be certain that all doors are locked before proceeding to the place of shelter. Is there anything further which could be done? Another possibility is that, in the event of an actual attack causing some structural damage to the building, a great many papers might be strewn about in the debris and find their way into the hands of outsiders.

13. Most of the foregoing paragraphs deal with security changes made in connection with the Consulate. Insofar as the Delegation is concerned, we have had the glass panel in the transom in the Sub-Registry Office replaced by a steel panel and a suitable internal lock has been provided. Since there are no locally engaged members in the Delegation, the internal security problem is not as difficult as was the case in the Consulate. As was the case in the Consulate, barred and locked steel cabinets have been provided and the combination on the safe has been changed regularly.

14. There has been a considerable exchange of correspondence with the Department concerning the amalgamation of the Sub-Registry of the Consulate General with the Sub-Registry of the Delegation, and it is proposed that as of July 1 the Consulate Sub-Registry will be moved upstairs and become a part of the Delegation Sub-Registry in the inner office where the Delegation Sub-Registry is now located. This should further strengthen our Sub-Registry security because of the fact that there will be continual supervision of the two Sub-Registries by External Affairs personnel. The combined Sub-Registry personnel will be Mr. Desjardins, Miss McGoff, Mr. Arial and Mrs. Gillespie.

15. I would appreciate receiving any further instructions you might like to forward.

K. A. GREENE

Canadian Consul-General.

Document disclosed under the Access to Information Act
Document divulgué en vertu de la [redacted]ès à l'information

Files: 50048-E-40
50048-AF-40
50048-AS-40

Defence Liaison/V.C.[redacted]

FILE COPY

CONFIDENTIAL

February 15, 1951.

MEMORANDUM FOR ESTABLISHMENTS AND ORGANIZATION DIVISION

PERSONNEL DIVISION

50048-AF-40
Sub-32 Chrs. ✓ Filed....

In your consideration of the proposed consolidation of the registries of the Canadian Consulate General and the Permanent Delegation to the United Nations in New York, which I discussed with Mr. Starnes and Mr. Williams on February 13, I should appreciate your bearing in mind the following requirements of security:

1. Messengers: The Consulate General messenger should be a Canadian posted by the Department. This requirement has already been met by replacing the locally-engaged messenger with one of the Canadian drivers. As the quantity of classified material moving between the registry and the Permanent Delegation on the floor above will be considerable, it will be necessary to make sure that the messenger has adequate containers for carrying it.

2. Physical Alterations: As the replacing of all other locally-engaged personnel is not practicable, it will be necessary to adapt room 28 of the Consulate General to permit their exclusion from the registry. This should be done by closing the entrance to the hall leading from the east end of the room with a Dutch door. During working hours the lower section of the door should be kept locked and the unclassified files required by the locally-engaged staff handed to them over it. Both sections of the Dutch door should be locked at night and whenever a member of the registry staff is not in the room during the day. The door opening on the main hall should be kept on the latch at all times. The basic requirement here is that the registry should be made a restricted area.

3. Trade and Commerce and National Revenue: The present separation of the records of External and the other departments should be maintained. It would not be a workable arrangement from the point of view of security if the Trade and Commerce and National Revenue registries were included in the consolidation of External Affairs' registry.

4. Offices of the Permanent Delegation: If the Permanent Delegation registry is consolidated with the Consulate General registry on the third floor, the advantages of keeping the Delegation offices on the fourth floor are diminished. Provided similar precautions are taken to control the access to the offices, the moving of the Delegation to the third floor would be satisfactory.

G. de T. GLAZEBROOK

Defence Liaison (2)

000304

Document disclosed under the *Access to Information Act*
Document divulgué en vertu de la *Loi sur l'accès à l'information*
Defence Liaison/V.C.Leard/mb

FILE COPY

OTTAWA FILE
No. 5004S-AF-40

SECURITY CLASSIFICATION
CONFIDENTIAL

Letter No. D. 331

Date February 13, 1951

FROM: THE UNDER-SECRETARY OF STATE FOR EXTERNAL AFFAIRS, CANADA

TO: Office of the Permanent Delegation of Canada to the United Nations, New York City,

Reference

Subject: Security Arrangements

Copies Referred To

No. of Enclosures

Post File No.

Delivery will be made to you shortly of one Remington Rand safe-files equipped with No. 6730 manipulation-proof Sargeant and Greenleaf lock. It is/~~These are~~ designed to supplement the Taylor safe as a repository for highly classified material. All cypher material should be kept in the Taylor safe. As far as possible top secret files should also be kept in that safe.

2. It will be necessary in using this type of safe-file to observe the same precautions as for the Taylor safe. The combination should be changed before a safe-file is put into use and thereafter at least every three months. In order to make it more difficult to work out the combination, I suggest that you do not use numbers which are close together, or are multiples of a given number. The combination should, of course, be held by the absolute minimum number of persons, and you will appreciate the importance of not leaving the combination numbers in an accessible place, and the inadvisability of indicating that the numbers bear reference to the combination of the safe-file; for instance, if the numbers are recorded in a pocketbook.

3. No work connected with a safe-file should be placed in the hands of a local firm or authority. In no circumstances should anyone have access to the safe-file mechanism other than a Canadian member of your staff or a member of the United States or British government staffs who is either a British subject or a United States citizen. Should you not be able to make a safe-file function by this means, let me know by telegram and I shall arrange for the sending of the necessary parts or the return of the safe-file to the manufacturers and its replacement.

4. I would call your particular attention to the instructions for locking a safe-file. Turning the dial counter-clockwise to zero moves the bolt into position, but until the dial is made to spin freely by turning the knob within the dial one full revolution, the mechanism is not locked. The dial must then be spun four full revolutions counter-clockwise to destroy the combination.

for Under-Secretary of State
for External Affairs.

Document disclosed under the *Access to Information Act*
Document divulgué en vertu de la *Loi sur l'accès à l'information*

Defence Liaison/V.C.Moore/mb

Files: 50048-N-40
50048-AF-40
50048-AS-40

50048-AF-40
58

CONFIDENTIAL

February 13, 1951.

Consolidation of the Registries of the Canadian Consulate General and the Permanent Delegation to the United Nations in New York

If the proposed consolidation of the registries in New York is carried out, the following points should be borne in mind.

1. Messengers: The Consulate General messenger should be a Canadian posted by the Department. I understand that this requirement has already been met by replacing the locally-engaged messenger with one of the Canadian drivers. As the quantity of classified material moving between the registry and the Permanent Delegation on the floor above will be considerable, it will be necessary to make sure that the messenger has adequate containers for carrying it.

2. Physical Alterations: As the replacing of all other locally-engaged personnel is not practicable, it will be necessary to adapt room 28 of the Consulate General to permit their exclusion from the registry. This should be done by closing the entrance to the hall leading from the east end of the room with a Dutch door. During working hours the lower section of the door should be kept locked and the unclassified files required by the locally-engaged staff handed to them over it. Both sections of the Dutch door should be locked at night and whenever a member of the registry staff is not in the room during the day. The door opening on the main hall should be kept on the latch at all times.

3. Trade and Commerce and Finance: The present separation of the records of External and the other departments should be maintained. It would not be a workable arrangement from the point of view of security if the Trade and Commerce and Finance registries were included in the consolidation of External Affairs' registry.

Discussed 13 Feb 51 Glazebrook Stanners Williams
move provisions agreed to. Long-range plan may bring both posts together on C to floor. VCM

Document disclosed under the *Access to Information Act*
Document divulgué en vertu de la *Loi sur l'accès à l'information*

Defence Liaison/V.C.Moore/mb

Ext. 181B

FILE COPY

OTTAWA FILE
No. 50048-AF-40

SECURITY CLASSIFICATION
SECRET

Letter No. D. 260

Date February 1, 1951

FROM: THE UNDER-SECRETARY OF STATE FOR EXTERNAL AFFAIRS, CANADA

TO: Permanent Delegation of Canada to the United Nations, New York

Reference Your Letter No. 100 of January 27, 1951

Subject: Remington Rand Safe File

Copies Referred To

No. of Enclosures None

Post File No.

The Remington Rand safe file which is being delivered to you is designed to supplement the Taylor safe as a repository for highly classified material. You should of course continue to use the safe for cypher material.

2. It will be necessary in using this safe file to observe the same precautions as for the Taylor safe. The combination should be changed before the safe file is put into use and thereafter at least every three months. In order to make it more difficult to work out the combination, I suggest that you do not use numbers which are close together, or multiples of a given number. The combination should, of course, be held by the absolute minimum number of persons, and you will appreciate the importance of not leaving the combination numbers in an accessible place, and the inadvisability of indicating that the numbers bear reference to the combination of the safe; for instance, if the numbers are recorded in a pocketbook.

3. No work connected with the safe file should be placed in the hands of a local firm or authority. In no circumstances should anyone have access to the safe file mechanism other than a Canadian member of your staff or a member of the United States or British government staffs who is either a British subject or a United States citizen. Should you not be able to make the safe file function by this means, let me know by telegram and I shall arrange for the sending of the necessary parts or for the return of the safe file to the manufacturers and its replacement.

G. de T. GLAZEBROOK

for Under-Secretary of State for External Affairs

Document disclosed under the *Access to Information Act*
Document divulgué en vertu de la *Loi sur l'accès à l'information*

Copy for Mr Moore
Defence

Rec'd, Feb 5 [illegible]

FROM: THE CANADIAN PERMANENT DELEGATE TO THE UNITED NATIONS, NEW YORK

TO: THE SECRETARY OF STATE FOR EXTERNAL AFFAIRS, OTTAWA

File
[illegible]

File

RESTRICTED

CYPHER - AUTO

NO. 195

50 AFA 6
58

NEW YORK, January 31, 1951.

Restricted. Reference letter No. 100 of January 27th.

Remington Rand Incorporated has advised that delivery of safe will be made tomorrow, February 1st. I would appreciate reply to my letter under reference not later than tomorrow morning and authorization to accept this safe.

PERMANENT DELEGATE

Am writing to say "accept delivery"

JRM
Jan 31/51 Time 5:35 pm

Document disclosed under the *Access to Information Act*
Document divulgué en vertu de la *Loi sur l'accès à l'information*

Ext. 22A

Rec'd 1 Feb 51 Vom

File with

OTTAWA FILE
No. 50098-AF-40

Letter No. 100

Date. January 27, 1951

SECURITY CLASSIFICATION
RESTRICTED

FROM: PERMANENT DELEGATION OF CANADA TO THE UNITED NATIONS
NEW YORK

TO: THE UNDER-SECRETARY OF STATE FOR EXTERNAL AFFAIRS, CANADA

Reference

Subject: Purchase of Safe for the Permanent Delegation

D-2

1
2
3
4
5
6
7
8
9
10

31 JAN 1951

Copies Referred To

No. of Enclosures
None

Post File
No.

1. The New York representative of Remington-Rand, Inc., has informed us that an order for a safe was placed some time ago with his firm for delivery to this office. Since we have no record here of such an order having been placed on our behalf, it would be appreciated if you would confirm whether this item was actually ordered by the Department, and whether we should accept it when delivery is made. Delivery is expected in about two weeks.

2. I may add that the lock combination for this particular safe has already been forwarded to us by registered mail. The question has been raised as to the security value of a lock combination which has been transmitted in this manner. You might wish to let us know if, in the light of our departmental security regulations, it would be necessary, or at least desirable in these circumstances, to have the combination changed.

Raymond Cusack

for the PERMANENT REPRESENTATIVE

D

Document disclosed under the *Access to Information Act*
Document divulgué en vertu de la *Loi sur l'accès à l'information*

EXTERNAL AFFAIRS
REFERENCE CLEARED
1951 JAN 31 PM 3:16

Document disclosed under the Access to Information Act
Document divulgué en vertu de la Loi sur l'accès à l'information

Defence Liaison/V.S.Moore/mb

File 50048-AF-40
50048-N-40
50048-AS-40

File No. 50048-AF-40
Sub. 58 Chron.... Filed....

Secret Pellerin 12 Jan 51

January 9, 1951.

Mr. Glazebrook
The suggestion so far as I know has been of a most tentative nature, and has only been discussed between Mr. Cadieux & myself. We are both well aware that it was the view of the Def. Liais. (2) Div. that the Perm Del. arrangements are good and therefore should not be disturbed if this could be avoided. On the other hand faced with demands for additional staff we have been obliged to consider the overall picture of the staff and office space in N.Y. There are undoubtedly ways in which expenditures in N.Y could be reduced by consolidation of staff & office space — I also feel that if there are obstacles (security & other) in the way of consolidation some of the services such as Library & Registry they could

File Gordy

MEMORANDUM FOR MR. STARNES

It has come to my attention that a consolidation of the registries in the Permanent Delegation to the United Nations and the Consul General in New York has been proposed. If such an alteration of physical arrangements of the Post is in fact being considered, this Division should be consulted in view of the consequential measures which would have to be taken.

Ian Glazebrook
Defence Liaison (2)

Document disclosed under the *Access to Information Act*
Document divulgué en vertu de la *Loi sur l'accès à l'information*

Defence Liaison/V.C.Moore/mb

File 50048-AF-40

[redacted]0048-N-40

50048-AS-40

CONFIDENTIAL

January 9, 1951.

File No. 50048-AF-40
Sub. 58 Filed....

MEMORANDUM FOR FILE

With the closing of the Delegation to the U. N. General Assembly, the establishment for New York is being reduced to two cars and two drivers. The three Canadian drivers at present engaged are local employees, not having been appointed under the Civil Service Commission. They can in consequence not be transferred to any other Post. Personnel Division is therefore arranging for the replacement of the locally-engaged messenger, who has been called up to the U. S. Armed Forces, by one of the drivers, H. Sayer. Sayer has been cleared to Top Secret.

VCMoore

~~Defence Liaison (2)~~

Document disclosed under the *Access to Information Act*
Document divulgué en vertu de la *Loi sur l'accès à l'information*

Defence Liaison/V.C.Moore/mb

Ext. 181B

FILE COPY

OTTAWA FILE No. 50048-N-40
File No. 50048-AF-40V
50048-AG-40

SECURITY CLASSIFICATION
SECRET

Letter No. D. 23

Date

FROM: THE UNDER-SECRETARY OF STATE FOR EXTERNAL AFFAIRS, CANADA

TO: The Canadian Consul General, New York, N.Y.

Reference: Your despatch No. 16 of January 6, 1951.

Subject: Security Arrangements

The arrangements which you propose to make for the safekeeping of the diplomatic bag in the supply office within room 420 and for the disposition of the keys to this office and to your cypher room are satisfactory.

G. de T. GLAZEBROOK

for Under-Secretary of State for External Affairs

Copies Referred To

No. of Enclosures

Post File No.

Document disclosed under the *Access to Information A*
Document divulgué en vertu de la *Loi sur l'accès à l'informa*

Ext. 180A

copies on U.N. Asst. Sec. file & Com. file

To Sec. Com. Attorney & file

OTTAWA FILE
No. 50048-A-40

SECURITY CLASSIFICATION
SECRET

Despatch No. 701

Date 12 December, 1950.

FROM: The Permanent Representative of Canada to the United Nations, New York.

TO: THE SECRETARY OF STATE FOR EXTERNAL AFFAIRS, CANADA

Reference: Your despatch No. D.1590 dated 4 December, 1950.

D-V

Subject: Security Arrangements for Permanent Delegation of Canada to the United Nations.

15 DEC 1950

Copies Referred To.....

No. of Enclosures (None)

Post File

No.....

1. This will inform you that careful note has been taken of the recommendations made in your communication under reference to improve the security arrangements of this office.

2. We have been given to understand that the Secretary-General of the Canadian Delegation to the Fifth Regular Session of the General Assembly has already informed you that steps have been taken with the Consulate-General to ensure maximum security in the handling of diplomatic bags.

3. With regard to the fitting of bars, yale padlocks and spring-type locks to filing cabinets and individual offices, enquiries are being made in order to secure the required estimates, and we shall not fail to communicate again with you as soon as these safety measures have been implemented.

4. With reference to paragraph 9 of your despatch, I should like to inform you that a register has been set up in our records office for "top secret" teletypes.

5. The attention of the Secretary of the Delegation has been drawn to the latter part of paragraph 4 of your communication under reference, and has been requested to assume the responsibility for the compliance with the Departmental regulations on the part of the staff of this office.

Raymond Cufaut

for the Permanent Representative

D

Document disclosed under the Access to Information Act
Document divulgué en vertu de la Loi sur l'accès à l'information

FILE COPY ONLY Defence Liaison-VCMcCrezdrc

EXT. 140

DEPARTMENT OF EXTERNAL AFFAIRS
OTTAWA

SECRET

December 4, 1950

No. D-186

50048-AF-40
19 | 50

Sir,

I enclose the document(s) listed below.

I have the honour to be,
Sir,
Your obedient servant,

The Chairman,
Canadian Delegation to the
United Nations,
New York.

Secretary of State for External Affairs.

DESCRIPTION OF DOCUMENT	SUBJECT
1 copy of Despatch No. D-1590 to theCanadian Permanent Delegate to the United Nations,	Security Arrangements

Document disclosed under the Access to Information Act
Document divulgué en vertu de la Loi sur l'accès à l'information

FILE COPY ONLY Defence Liaison - VCMoore:dfo

Ext. 140

DEPARTMENT OF EXTERNAL AFFAIRS
OTTAWA

SECRET

December 4 1950

No. D-485

50048-AF-1-2
19 L 50

Sir,

I enclose the document (s) listed below.

I have the honour to be,
Sir,
Your obedient servant,

The Canadian Consul General,
New York,
N.Y.

Secretary of State for External Affairs.

Description of Document	Subject
1 copy of Despatch No. D-1590 to theCanadian Permanent Delegate to the United Nations, New York	Security Arrangements

Defence Liaison Division/VMoore-mo-dlc
Document disclosed under the Access to Information Act
Document divulgué en vertu de la Loi sur l'accès à l'information

FILE COPY

OTTAWA FILE
No. 50048-AF-40
18 50

SECURITY CLASSIFICATION
SECRET

Despatch No. D. 1590

Date
December 4, 1950

FROM: THE SECRETARY OF STATE FOR EXTERNAL AFFAIRS, CANADA

TO: The Canadian Permanent Delegate to the United Nations, New York

Reference:

Subject: Security Arrangements

Copies Referred To: Chairman of Canadian Delegation to U.N. Assembly; Canadian Consul General, New York

No. of Enclosures: 2

Post File No.

As a result of Mr. Moore's recent visit to New York I should appreciate your implementing a number of measures to improve the security arrangements at your Post. They are designed to ensure adequate security without undue inconvenience. I attach copies of despatches No. D.161 of November 22 to the Chairman of the Canadian Delegation to the United Nations General Assembly, and D.476 of November 28 to the Canadian Consul General.

2. The security arrangements in your offices are basically sound. Above all, you have no locally-engaged personnel and entrance during working hours is gained only by the one door opening on the reception room. To exploit this advantage, I would ask you to ensure that the offices are not entered by locally-engaged staff of the Consulate General and are in fact restricted to Departmental employees posted by Ottawa. The carrying of classified material must of course be done only by your confidential messenger or another member of your staff.

3. The handling of the diplomatic bag has not been entirely satisfactory. As you know, the outgoing bag of the Permanent Delegation is locked by the staff of the Delegation and delivered by your messenger to the Consulate General sub-registry, where it is placed inside the Consulate General bag. It is then called for by one of the Departmental drivers and taken via the Biltmore to the airport or railway station. As the driver is usually delayed by the transportation requirements of the Assembly Delegation and does not arrive until some hours after the Consulate General staff has left, the bag is often left unattended in the office. An arrangement should be made for it to be in someone's custody continuously; either the driver must pick it up before the office closed, or it must be left with the member of the Communications staff on late duty. The drivers' responsibilities should be explained to them in detail. It appears that while the bag is in their custody they must act as chauffeurs and find something to eat on the way. This is undesirable and if it is unavoidable, explicit instructions must be given. The bag must at all times be in the physical possession of the driver and must never, for example, be left at his table while he is placing an order in a cafeteria. The possibility that bags are being left in unattended cars also cannot be overlooked. As the keys to all our Diplomatic bags are identical and the bags themselves afford no protection, the essence of the security of their contents lies in their being in the constant custody of a member of the Department or a courier.

....2

Document disclosed under the *Access to Information Act*
Document divulgué en vertu de la *Loi sur l'accès à l'information*

The handling of the incoming bag has been satisfactory except that the locally-engaged messenger has on occasion — at least every Saturday when Miss McGoff is not on duty — opened the Consulate General bag and distributed the mail. The Consul General has been asked to make sure that this messenger shall in future never have access to the contents of the bag or handle it, and to have a Departmental employee handle the bag in Miss McGoff's absence.

4. The lock of the hall door must be considered compromised as the keys are identical with those of the Consulate General and are held by the char staff. This fact emphasizes the need for good internal security. There is, in effect, no protection for classified material in your offices other than that afforded by the cabinets and the safe. There is a simple rule which we observe in Ottawa in accordance with paragraph 209 of the Departmental Regulations and Instructions. To make the regulation workable, it will be necessary for you to have the doors of individual offices equipped with spring-type locks. The recipient of a classified document is of course personally responsible for it. If he leaves his room without locking away his classified papers, he must lock the door behind him, unless he remains within seeing distance of the door. He must also ensure that, whether or not the door is locked, all such papers are locked in a cabinet or safe during quiet hours; that is, during the lunch hour and after office hours. This rule applies to a restricted as well as to a top secret paper. Whether or not a stenographer or the Delegation's messenger is made responsible for clearing papers away at night, the onus remains on the officer himself. Over and above this individual responsibility of every member of your staff, you might make your security officer responsible not only for the security arrangements in general but for the compliance with the regulations on the part of your staff. I would suggest that he make a periodic inspection of the offices, both during working and quiet hours. I would suggest that drawers and other depositories not designed for classified material should at all times be left unlocked in order to facilitate this security check. To simplify the handling of carbon papers it would be desirable to treat all carbons as classified material and to destroy all used carbons as classified waste.

5. The combination of the safe has been changed regularly and has been properly restricted to a minimum number of your staff. Keys for cabinets should not be taken from the premises; overnight they should be kept in the safe.

6. The recommendations made orally to Mr. Coleman that three additional cabinets in the subregistry and those used by Mr. Riddell's secretary, by Mr. Carter and Mr. Crepault should be fitted with bars and Yale padlocks have been confirmed by Circular Document B. 121 of November 7, 1950. The card index file, which has proved too large to be locked in a cabinet and would crowd the safe, should also be fitted with a Yale lock. As the protection afforded by the safe and the padlocked cabinets is by no means absolute, I should be grateful if you would consider having the char staff excluded from the subregistry by fitting the door with a special Yale lock of the bolt-action type. As a not entirely satisfactory alternative, arrangements might be made for the char staff to clean these rooms during the day under the supervision of a member of your staff. The transom opening from the subregistry into the main hallway should either be sealed off or equipped with bolts.

7. The disposal of classified waste is being carried out satisfactorily. I am looking into the possibility of providing a more adequate destruction unit.

...3

Document disclosed under the *Access to Information Act*
Document divulgué en vertu de la *Loi sur l'accès à l'information*

8. In view of the vulnerability of your telephone communications I would draw your attention to paragraph 21 of the Departmental Regulations and Instructions. The operation of the exchange by locally-engaged employees of the Consulate General has such advantages that I do not suggest a change there. Their presence, however, together with the assumption which you must make that all conversations are subject to being monitored, renders imperative the utmost caution in the use of the telephone. There is no way of providing security on telephones other than by a strict application of the regulations. The risk would be reduced if more use were made of Mr. Riddell's direct line. I am looking into the possibility of adapting the switchboard in order to cut out the operator once a call is put through.

9. There are two points of common concern to the Assembly Delegation, the Permanent Delegation and the Communications Room in the Consulate General. The messengers from the Permanent Delegation in theory travel between the Biltmore Hotel and Rockefeller Centre by car. The demand on the cars is, however, so great that these trips are in fact usually made on foot and take twenty minutes through heavy pedestrian and vehicular traffic. I should be glad if you would ensure that, when a car is not available, the messenger makes use of a taxi when going to points beyond the Centre, such as the Biltmore Hotel. In this connexion, I would draw your attention to paragraph 4 of my despatch No. D. 161 of November 22 to the Chairman of the Assembly Delegation. The other question is the registering in and out of secret and top secret teletypes. I should be grateful if you would set up a register corresponding to those being established by the Consulate General and the Assembly Delegation.

10. I should appreciate your suggestions in the light of these measures.

J. de T. GLAZEBROOK
for Secretary of State
for External Affairs

Document disclosed under the *Access to Information Act*
Document divulgué en vertu de la *Loi sur l'accès à l'information*

Ext. C

DUPLICATE

OTTAWA FILE No. 50048-AF-40

SECURITY CLASSIFICATION: SECRET

Despatch No. D. 476

Date November 28, 1950

FROM: THE SECRETARY OF STATE FOR EXTERNAL AFFAIRS, CANADA

TO: The Canadian Consul General, New York

Reference: Your letter to the Under-Secretary, dated July 6, 1950.

Subject: Security Arrangements.

Copies Referred To: The Chairman, Canadian Delegation to the U.N. General Assembly, New York.

No. of Enclosures: One

Post File No.

As a result of Mr. Moore's recent visit to New York, there are a number of measures which I should appreciate your implementing in order to improve the security arrangements at your Post. They are designed to ensure adequate security without undue inconvenience.

2. The whole question of locally-engaged personnel is at present being reviewed by the Department and by the Security Panel. The results of this review will be embodied in a new Circular Despatch. In the meantime, we must face the difficult problems posed by your locally-engaged personnel, aggravated by the presence of officers of other departments and their locally-engaged employees. Complete segregation of locally-engaged personnel in these circumstances is not possible. The External Subregistry should, however, be made self-contained; that is, it should be restricted to External Affairs' records and personnel employed by External Affairs. This will mean that either Mr. Collins must move from the subregistry or the subregistry must be set up elsewhere. The simpler solution would be for Mr. Collins and his clerk to have their desks in the area occupied by the other personnel of Trade and Commerce (in the south corner of the suite of offices).

3. Apart from this rule that External Affairs and another department should not be in the same room, there is a simple rule which we observe in Ottawa in accordance with paragraph 209 of the Departmental Regulations and Instructions. To make the regulation workable, it will be necessary for you to have the doors of individual offices equipped with spring-type locks. The recipient of a classified document is of course personally responsible for it. If he leaves his room without locking away his classified papers, he must lock the door behind him, unless he remains within seeing distance of the door. He must also ensure that, whether or not the door is locked, all such papers are locked in a cabinet or safe during quiet hours; that is, during the lunch hour and after office hours. This rule applies of course to a restricted as well as to a top secret paper but is of particular concern to those officers, such as Mr. Friefeld, who handle files from the Permanent Delegation. Whether or not a stenographer or the Delegation's messenger is made responsible for clearing papers away at night, the onus remains on the officer himself. Over and above this individual responsibility of every member of your staff, you might make your security officer responsible not only for the security arrangements in general but for the compliance with the regulations

...2

Document disclosed under the *Access to Information Act*
Document divulgué en vertu de la *Loi sur l'accès à l'information*

on the part of your staff. I would suggest that he make a periodic inspection of the offices, both during working and quiet hours. These measures will complement the system of hand to hand circulation of classified papers which you have already established. In regard to your own office, I do not suggest that the door should be locked. Your secretary could be made responsible for keeping it under observation. It would be nice if she were to set up her desk in the outer section of her office; the filing cabinet could remain in the inner section, which should be provided with a door to be locked when she is engaged elsewhere. In regard to the disposition of your papers, I agree that the small cabinet in your office is quite inadequate, but would leave it to you whether you install a steel cabinet equipped with bar and padlock or make use of only your secretary's cabinet. The only secure depositaries at your Post are of course the safes and the barred steel cabinets; drawers and other cabinets have little value and can only give a false sense of security.

4. The locks of the outer doors of both the Consulate General and the Permanent Delegation must be considered compromised as the keys, which are identical for both Posts, are held by the char staff and by the locally-engaged messenger. This fact emphasizes the need for good internal security. Mr. Coleman has been asked to have the time-honoured custom of hiding keys for cabinets at strategic points about the rooms or keeping them in locked drawers discontinued; they should either be carried on the person or left with the member of the Communications staff on duty to be locked in the safe. I would also suggest that drawers should at all times be left unlocked in order to facilitate a security check by the security officer.

5. The recommendations made orally to Mr. Coleman that your secretary's wooden cabinet be replaced by a steel one equipped with bar and padlock and that one cabinet in the Passport office, four in the Internal subregistry and one in the Information section be fitted with bars and Yale padlocks have been confirmed by Circular Document B.121 of November 7, 1950.

6. As the focal point of communications for all three offices in New York, the Communications Room of course comprises the most vital area at your Post. The following measures which were discussed with Mr. Coleman and Mr. Warren should be implemented as soon as possible as a protection for the machines and cypher material.

a) The locks of both doors should be replaced or duplicated by special Yale locks of the bolt-action type. No member of the staff other than the Communications personnel should hold keys. Should the Centre administration insist on having a key for deposit in their safe, it should be sealed in the presence of a Departmental officer and a regular check should be made by a member of your staff to ensure that the seal has not been broken; if it is at any time found broken, the lock should be once more replaced without delay. Mr. Warren's suggestion that a seal be placed on the inner door every night should, if it is found feasible, be carried out.

b) The glass panel of the outer door should be replaced by reinforced glass or steel.

c) The char staff should be excluded from the outer as well as the inner room. I understand that Mr. Coleman has undertaken to provide the Communications staff with adequate cleaning equipment.

....3

Document disclosed under the *Access to Information Act*
Document divulgué en vertu de la *Loi sur l'accès à l'information*

b) The Taylor safe should be moved from the storage room into the outer room and, after the combination is changed, should be used for the purpose for which it was intended; that is, the protection of cypher material. The more vital communications material (tapes, S.T.P.'s, cypher books, spare parts) should be kept in it and any overflow stored in the Dominion safe, which should be retained in the same room. Mr. Belanger of the Communications section in Ottawa is seeing to the rearrangement of machines to make room for the two safes. The amount of tapes to be held by the Communications staff is being reduced to facilitate their storage entirely in the Taylor safe. Combinations for the safes should be held by the Communications staff only.

c) Mr. Belanger is also obtaining solid covers and padlocks with which to secure the machines in the inner room.

I would note that the Communications staff are working in very cramped quarters. The removal within the next few months of the large cage in the inner room will ease the situation but it will again become acute with the simultaneous installation of an additional machine. Consideration is being given to the allocation of an additional room to the Communications staff in order to make their conditions of work more bearable and to increase their efficiency.

7. The destruction of classified waste from the Communications Room has been carried out satisfactorily, despite the inadequate incinerator in the basement which renders the process laborious and unhealthy. I am looking into the possibility of providing you with a more suitable destruction unit. There is at present no arrangement for the disposal of classified waste from the offices other than the Communications Room. While the most highly classified material consists of incoming papers which are filed, some arrangement for carbons and spare copies should be made. The waste could be given to Miss Kelloff for destruction by the Communications staff. In this regard I would draw your attention to paragraph 208 of the Departmental Regulations and Instructions.

8. In the past, no signature has been obtained for incoming and outgoing secret teletypes. Mr. Harran is now going ahead with the registering of such teletypes and the numbering of incoming top secret teletypes. Corresponding registers are being set up by the Permanent Delegation and the Assembly Delegation.

9. The handling of diplomatic bags has not been entirely satisfactory. As you know, the outgoing bag of the Permanent Delegation is locked by the staff of the Delegation and delivered by the Departmental messenger to your subregistry, where it is placed inside the Consulate General bag. It is then called for by one of the Departmental drivers and taken via the Biltmore to the airport or railway station. As the driver is usually delayed by the transportation requirements of the Assembly Delegation and does not arrive until some hours after the Consulate General staff has left, the bag is often left unattended in the office. An arrangement should be made for it to be in someone's custody continuously; either the driver must pick it up before the office closes, or it must be left with the member of the Communications staff on late

....4

Document disclosed under the *Access to Information Act*
Document divulgué en vertu de la *Loi sur l'accès à l'information*

duty. The drivers' responsibilities should be explained to them in detail. It appears that while the bag is in their custody they must act as chauffeurs and find something to eat on the way. This is undesirable and if it is unavoidable, explicit instructions must be given. The bag must at all times be in the physical possession of the driver and must never, for example, be left at his table while he is placing an order in a cafeteria. The possibility that bags are being left in unattended cars also cannot be overlooked. As the keys to all our diplomatic bags are identical and the bags themselves afford no protection, the essence of the security of their contents lies in their being in the constant custody of a member of the Department or a courier.

10. The handling of the incoming bag has been satisfactory except that the locally-engaged messenger has on occasion — at least every Saturday when Miss McGoff is not on duty — opened the Consulate-General bag and distributed the mail. Mr. Coleman has been asked to make sure that this messenger shall in future never have access to the contents of the bag or handle it. Miss McGoff was asked to instruct a Departmental employee to handle the bag in her absence.

11. In view of the vulnerability of your telephone communications I would draw your attention to paragraph 21 of the Departmental Regulations and Instructions. The operation of the exchange by locally-engaged employees has such advantages that I do not suggest a change there. Their presence, however, together with the assumption which you must make that all conversations are subject to being monitored, renders imperative the utmost caution in the use of the telephone. There is no way of providing security on telephones other than by a strict application of the regulations.

12. I should appreciate your suggestions in the light of these measures. Attached for your information is a copy of despatch No. D. 161 of November 22, 1950 to the Chairman of the Canadian Delegation to the United Nations General Assembly, New York.

G. de T. GLAZEBROOK

for Secretary of State for External Affairs

Document disclosed under the Access to Information Act
Document divulgué en vertu de la Loi sur l'accès à l'information

Mr. Moore's copy

Original 50048-A5-40

50048-AF-40

OTTAWA FILE
NO. 50048-AF-6

SECURITY CLASSIFICATION
SECRET

Despatch No. D 161

Date November 22, 1950.

FROM: THE SECRETARY OF STATE FOR EXTERNAL AFFAIRS, CANADA

TO: CHAIRMAN, CANADIAN DELEGATION TO THE UNITED NATIONS GENERAL ASSEMBLY, NEW YORK.

Reference:

Subject: Security Arrangements.

Copies Referred To.....

No. of Enclosures .....

Post File No.....

As a result of a recent examination of the security arrangements for the Delegation to the United Nations Assembly, I should be grateful if you would implement a number of measures to include these arrangements. On the whole they are reasonably satisfactory, in particular the disposition of the offices and of the security guards.

2. The supervision by the guards of the char staff and other local employees in the office area could be tightened up; a periodic check should be made of the lounge and hallway to ensure that classified papers have not been left there; beyond this area the security of classified papers of course becomes entirely the responsibility of the person concerned. I would ask you to impress on all members of the delegation the need to reduce to a minimum the classified papers which are taken to the lounge, the bedrooms and Lake Success.

3. I would also draw your attention to paragraph 38 of the Booklet on Security prepared by the Security Panel and paragraph 210 of Departmental Regulations and Instructions concerning telephone security. There is no way of providing security on telephones other than by strict application of the regulations. It would be desirable to make use of the direct line whenever possible, rather than those lines linked with the hotel telephone exchange.

4. Messengers going between the Biltmore Hotel and Rockefeller Centre should at all times be provided with transportation. At the present time, since the demand on the delegation's cars is so great, these trips are usually made on foot. I should be grateful if you would authorize the messengers to use a taxi when a car is not available. Cash for this purpose and a form for signature by the taxi driver would have to be made available to the messengers.

5. In the past, no signature has been obtained for incoming and outgoing secret teletypes. Mr. Warren of the Communications staff at the Centre is now going ahead with the registering of such teletypes and with the numbering of incoming top secret teletypes. A corresponding register should be set up by the Assembly Delegation.

...2

Document disclosed under the *Access to Information Act*
Document divulgué en vertu de la *Loi sur l'accès à l'information*

6. The handling of the diplomatic bag has not been entirely satisfactory. The outgoing bag of the Consulate General, in which is placed the Permanent Delegation's bag, is called for by one of the Departmental drivers and taken via the Biltmore to the airport or railway station. As the driver is usually delayed by the transportation requirements of the Assembly Delegation and does not arrive until some hours after the Consulate General staff has left, the bag is often left unattended in the office. An arrangement should be made for it to be in someone's custody continuously: either the driver must pick it up before the office closes, or it must be left with a member of the Communications staff on late duty. The drivers' responsibilities should be explained to them in detail. It appears that while the bag is in their custody they must act as chauffeurs and find something to eat on the way. This is undesirable and if it is unavoidable, explicit instructions must be given. The bag must at all times be in the physical possession of the driver and must never, for example, be left at his table while he is placing an order in a cafeteria. The possibility that bags are being left in unattended cars also cannot be overlooked. As the keys to all our diplomatic bags are identical and the bags themselves afford no protection, the essence of the security of their contents lies in their being in the constant custody of a member of the Department or a courier.

G. de T. GLAZEBROOK

for Secretary of State for External Affairs.

Document disclosed under the *Access to Information Act*
Document divulgué en vertu de la *Loi sur l'accès à l'information*

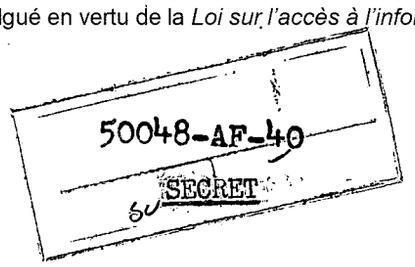

CIRCULAR DOCUMENT

NO. B. 121

Ottawa, November 7, 1950.

Security Arrangements.

In order to improve the facilities for the safe custody of classified documents at your post, I should be grateful if you would have all cabinets used for this purpose fitted with hasps and iron bars. The hasps should be so fitted that the bar passes through the handles of the drawers and should be either rivetted to the frame or made fast with a bolt and locking washer. You should disconnect the push-button locking device with which the cabinet may be equipped and rely for protection solely on the bar and padlock. The push-button lock has little value and can only give a false sense of security.

In ordering additional cabinets in future I should be grateful if you would specify the use to which they are to be put. If a secure depository is required we shall supply you with steel cabinets equipped with bar and padlock; otherwise we shall send you cabinets without a locking device of any kind. If satisfactory steel cabinets can be purchased more conveniently locally, they must be fitted with bar and padlock before being used for classified material. The work on the cabinets may be done locally and posts in the United Kingdom and the United States may also purchase the padlocks locally, provided that they are as good as the Yale padlock supplied by the Department; all other posts will be supplied with padlocks from Ottawa.

I would draw your attention to the precautions to be observed in handling the keys for padlocks. A careful record of the persons to whom keys are issued should be kept. No person locally employed should be given a key. The keys should be kept in the safe when not in use and should not be taken out of the building. Should a key be lost, the padlock together with the remaining keys should be returned by bag to the Department, and such loss should be notified to the Department so that a new lock may be despatched without delay. A spare padlock should be kept in reserve so that a padlock compromised by the loss of a key can be replaced at once. In no circumstances should any keys be cut locally.

Secretary of State
for External Affairs.

To the Heads of

Canadian Posts Abroad.

Document disclosed under the Access to Information Act
Document divulgué en vertu de la Loi sur l'accès à l'information

SECRET

Defence Liaison/V.C. Moore
25 October 1950

50048-AF

MEMORANDUM FOR MR. GLAZEBROOK:

Security Arrangements at the Delegation to the United Nations Assembly, the Permanent Delegation to the United Nations and the Consulate General in New York.

1. My first and obvious comment is that my visit to New York has again impressed on me how far short of the ideal the application of security regulations always comes. There was no little discrepancy between my conception of what is de rigueur and what is feasible at posts abroad. The flexible and expeditious handling of the day's work demanded by the limited number of staff and their relations with the public fall inevitably into conflict with the requirements of security. Even more than in Ottawa, it seems that the result can only be a compromise, but at the Consulate General, in particular, the balance inclines too heavily against the interests of security.

By Hand Delivery

2. There are two points of common concern to the Assembly Delegation, the Permanent Delegation and the Communications Room in the Consulate General. The messengers from the Permanent Delegation in theory travel between the Biltmore Hotel and Rockefeller Centre by car. The demand on the cars is, however, so great that these trips are in fact usually made on foot and take twenty minutes through heavy pedestrian and vehicular traffic. A suggestion worth considering from our point of view is that when a car is not available a taxi should be used by the messenger. Cash for this purpose would have to be made available to the messengers, and a form for signature by the cab driver. The other question has two aspects:

Registering of Top Secret Documents

(a) registering in and out of incoming and outgoing teletypes;

(b) numbering of copies of other top secret papers.

I have asked Mr. Warren of the Communications staff to go ahead with his delayed plan for numbering the copies and obtaining a signature for all incoming secret teletypes. I also suggested to Mr. Pollock that a corresponding registry be set up at the Biltmore. At present no signature is obtained for messages going either way. The broader responsibility for numbering the copies of other top secret papers and for keeping a record of their distribution within and outside the Assembly Delegation is also being neglected, as it is in Ottawa.

Locally Engaged Personnel

3. The Permanent Delegation and the Assembly Delegation are happily free from the presence of locally engaged staff which aggravates the problems common to all three offices arising from the use of shared premises and compromised locks. I take it that the alternatives in employing locally engaged personnel are, in order of preferability:

...2

Document disclosed under the *Access to Information Act*
Document divulgué en vertu de la *Loi sur l'accès à l'information*

(a) they must not have access to any classified material;

(b) if it is essential that a locally engaged member of the staff have access to classified material, that person must be cleared for security by the Department;

(c) should it not be feasible to change the arrangement of the offices to make segregation possible, all locally engaged personnel must be cleared for security.

Because of the difficulties involved in obtaining clearances abroad on such a large scale, we wish, if at all possible, to avoid this latter alternative. I am almost convinced, however, that it is the only completely satisfactory solution, if we are to exclude from consideration the replacement of locally employed by Departmental personnel. While it is quite possible to make sure that locally engaged personnel are not given work of a classified nature and to deny them access to a vital area such as the Communications Room, the fact remains that there is no security when "outsiders" are employed in offices where classified work is done or in adjoining offices connected by unlocked doors. The very presence of such persons strikes at the roots of security. To restrict their movements by keeping them under observation would be a possible if irksome measure; it is nevertheless hardly conceivable, in view of the pressure of work and the nature of the close relationship of all personnel at a post, that such precautions could be effectively maintained in the long run.

4. From the attached floor plan of the Consulate General, you will see that only a major alteration of the arrangement of the offices would make possible the segregation of locally engaged personnel. The offices of National Revenue, Trade and Commerce and External Affairs are mixed, and all personnel have access to every office except the Communications Room. The Consulate General is in addition visited twice daily by a locally engaged messenger from the National Film Board, which has a separate office and administration. The offices of the Consul General and his secretary are separated by the sub-registry cum reception room and the offices of Trade and Commerce and National Revenue from the other External offices; in a corner of the External sub-registry on the far side of the latter offices an Assistant Administrative Officer of Trade and Commerce and a locally engaged employee have their desk. There are three officers and one Administrative Assistant of Trade and Commerce and one officer of National Revenue served by four locally engaged personnel. As the senior officer of Trade and Commerce frequently acts as head of post in Mr. Greene's absence, and all four officers require frequent consultation with Mr. Greene, their situation adjacent to his office is the most practical. The only alternative would be, I think, to switch them with the Information Section, at the same time moving the External sub-registry into the remaining front offices; the door connecting the other External offices

...3

Document disclosed under the *Access to Information Act*
Document divulgué en vertu de la *Loi sur l'accès à l'information*

with the room now used as the External sub-registry could then be locked.

5. Should this rearrangement be carried out, there would still remain the question of the employees engaged locally by External Affairs: one messenger and two switchboard operators. The messenger has, through the nature of his duties, access to all offices except the Communications Room; and the switchboard operators are in a position to piece together, over a period of time, tidbits of information which in isolation would be inconsequential. I understand, moreover, that Mr. Greene is inclined to expedite his work by frequent inter-office telephone conversations. While there is in fact little of a classified nature dealt with by the Consulate General, this situation assumes grave proportions from the fact that the switchboard serves not only the Consulate General and the Film Board, but the Permanent Delegation as well. Mr. Riddell makes use of a separate line for calls to Ottawa, but most incoming calls are made through the switchboard. The advantages of employing locally engaged staff in this work are obvious, but the vulnerability of the two posts is thereby increased.

6. I find it difficult to formulate a recommendation to break this stalemate. What I have done is to ask Mr. Coleman to make sure that only Departmental personnel handle the diplomatic bag. I would also suggest that the messenger and the switchboard operators be either cleared or replaced by Departmental personnel. There would remain the four locally engaged employees of Trade and Commerce and National Revenue. I should like to see them cleared but, if that is not acceptable, the reallocation of offices which I have suggested could be made. Mr. Bursey might move to Mr. Freifeld's office, Mr. Stewart to Mr. Keith's and Mr. Campbell and Mr. Donnen to the External sub-registry. The latter room could be partitioned.

7. I would note in passing the obvious fact, of concern to Trade and Commerce and National Revenue, that the employees engaged locally by these Departments handle all their classified material.

8. Attached is a list of all personnel of the Consulate General and Permanent Delegation. The clearance of at least the Departmental employees should be initiated without delay.

Consulate General

9. The rearrangement of rooms which I have suggested would doubtless be considered drastic by Mr. Greene and his officers, in view of the innocuous nature of their work and the fact that the only high classified material at the Consulate General consists of incoming material. The irrelevance of such an argument is nevertheless easy to point out.

Highly Classified Papers

10. A good effort has been made to ensure the safe custody of papers such as the Minutes of Meetings of Heads of Division. The documents are removed from the bag by a Departmental employee and handed to Mr. Coleman; they

...4

Document disclosed under the *Access to Information Act*
Document divulgué en vertu de la *Loi sur l'accès à l'information*

are then handed in a sealed envelope from one officer to the next, ending up again with Mr. Coleman, who gives them to his secretary for filing. It is a good system in theory, but the documents are exposed when the officer reading them is interrupted and leaves his office or when they are left on a desk when the officer is not there to receive them.

11. There is some dissatisfaction about the circulation of classified papers within the office, a good part of the messenger's time being taken up on outside errands, with the result that baskets are not always cleared at night. Mr. Freifeld is particularly concerned, as he handles a good number of highly classified papers from the Permanent Delegation. These documents, which include the diary file of the Permanent Delegation, are brought to him by the Departmental messenger and are normally returned the same day. They have, however, more than once been left in his out-basket overnight. I pointed out to him that while a weakness in office circulation increases the security risk, it nevertheless remains the responsibility of the officer concerned to see that such papers are returned or are locked away before he leaves for the day. With this in mind, I asked Mr. Coleman to have one of Mr. Freifeld's cabinets barred to provide a secure depository. Mr. Freifeld may in the meantime make a recommendation to Mr. Greene that at least one additional Departmental messenger be provided.

Cabinets

12. There is an adequate number of cabinets at the Consulate General, but none is equipped with a bar. Mr. Coleman is going ahead with the following recommendations:

(a) a steel cabinet equipped with bar and Yale padlock should replace the wooden cabinet (with defective lock) used by Mr. Greene's secretary;

(b) one cabinet in the passport office, four in the External sub-registry and one in the Information Section should be equipped with bar and Yale padlock. Where possible, the cabinets should be of the type without a push-button lock; otherwise the locking device should be disconnected.

In every case the hasps are to be rivetted or made secure by nuts and locking washer. The only depository in use in Mr. Greene's office is a small wooden cabinet in which he locks his papers when he does not give them to his secretary. We might suggest that he make use of only his secretary's cabinet or have one with a bar installed in his own office. The uselessness of drawers as a depository for classified documents might be pointed out to all officers.

13. I do not think that there is a need for cabinets equipped with combination lock.

...5

Document disclosed under the *Access to Information Act*
Document divulgué en vertu de la *Loi sur l'accès à l'information*

Keys

14. The locks of the outer doors of both the Consulate General and the Permanent Delegation must be considered compromised, as keys are held by the char staff and by the locally engaged messenger. The keys of the Consulate General and the Permanent Delegation are identical. At my suggestion, the time-honoured custom of hiding keys at strategic points about the rooms has been discontinued; they are now to be left with the member of the Communications staff on duty, who will lock them in the safe. I cautioned Mr. Coleman and Miss McGoff about the duplicating of keys. When padlocks are provided, the number of keys required should be specified, and if one is lost, the padlock should of course be replaced.

Diplomatic Bag

15. The outgoing bag of the Permanent Delegation is locked by the staff of the Delegation and delivered by the Departmental messenger to the sub-registry of the Consulate General, where it is placed inside the Consulate General bag. It is then called for by one of the Departmental drivers and taken via the Biltmore to the airport. As the driver is usually delayed by the transportation requirements of the Assembly Delegation and does not arrive until some hours after the Consulate General staff has left, the bag is often left unattended in the office. An arrangement should be made for it to be in someone's custody continuously: either the driver must pick it up before the office closes, or it must be left with a member of the Communications staff on late duty. It would be worth while, I think, to have the drivers' responsibilities explained to them in detail. It appears that while the bag is in their custody they must act as chauffeurs and find something to eat on the way. The possibility that bags may be left in unattended cars cannot be overlooked. As the keys to all our diplomatic bags are idential and the bags themselves afford no protection, the essence of the security of their contents lies in their being in the constant custody of a member of the Department or a courier.

16. The handling of the incoming bag has been satisfactory except that the locally engaged messenger has on occasion--at least every Saturday when Miss McGoff is not on duty--opened the Consulate General bag and distributed the mail. Mr. Coleman is now making sure that this messenger shall in future never have access to the contents of the bag, or deliver it. Miss McGoff will instruct a Departmental employee to handle the bag in her absence. The keys of the Consulate General's bag are held by Mr. Coleman and Miss McGoff. There is a possibility that a third key has been lost, never existed or is still held by Mr. LeFeuvre, now in Ottawa. The handling of the Permanent Delegation's bag until it reaches the Consulate General is satisfactory.

Communications Room

17. While the two rooms used by the Communications staff are more secure than the other offices, the equipment and cypher material are inadequately protected. The Communications instructions and code book are kept in a Dominion safe in the outer room; the special Taylor safe which was specifically intended for the protection of cypher material is kept in the small storage room across the hall and contains only a handful of secret and personal documents. I found incidentally that its combination had not been changed since its arrival.

...6

Document disclosed under the *Access to Information Act*
Document divulgué en vertu de la *Loi sur l'accès à l'information*

Two of the line machines are already in the outer room and the third is being moved there from the storage room. The two Rockex machines are in the inner room, where the cage barely leaves place for a small table for machine repairs. Classified waste, tapes and spare parts are kept inside the cage. During the day a member of the Communications staff is on duty in the rooms and access is gained only in response to a ring on the door bell. Both doors are of steel construction, but the outer door has a glass panel and a slot for mail. The door of the outer room is secured by an ordinary door knob lock, the keys for which are held by the char staff; the keys for the inner door (the lock is of the same type and was installed a year ago) are held only by the Communications staff and the Rockefeller Centre administration. The key held by the Centre is kept in their safe in a sealed envelope to be opened only in an emergency; a full report of the reasons for such a breaking of the seal is to be given. It is apparent that the outer lock is certainly and the inner lock possibly compromised, and that they must at once be replaced or duplicated by new locks of the bolt action type. Should the Rockefeller administration insist on having a key, a regular check by an officer of the post should be made to ensure that the seal is intact; if it is at any time found broken, the lock should be once more replaced without delay. The key should be sealed in the presence of a Departmental officer.

18. If equipped with two padlocks, the Rockex cage would give some security to the machines. At present the catches are broken and the door, which apparently has never closed properly, is left open. Mr. Warren has undertaken this repair. As a modified and slightly larger machine will be installed within a few months time and the present machines are to be adapted to eliminate any radiation, Mr. Belanger wishes to do away with the cage. Its size and shape result in a part of the small room being wasted, and inside the cage itself there is not room for the efficient operating of the machines. This over-crowding will be aggravated with the installation of the additional machine. The removal of the cage would double the space available. From the point of view of security, on the other hand, it would be desirable to retain the cage as an addition to the doubtful protection afforded by the doors.

19. Classified waste from the Communications Room is kept in the inner room and eventually burned in an incinerator in the basement. The burning is a laborious and unhealthy task. The destruction is complete, but the door of the destruction unit--which resembles a Quebec heater--is small and frequent poking is required to destroy the tapes and other material in less than three hours. Is there a type of more efficient unit which might be used in the office? It has on one occasion been necessary to send waste to Ottawa by diplomatic bag.

...7

Document disclosed under the *Access to Information Act*
Document divulgué en vertu de la *Loi sur l'accès à l'information*

20. I have already made the following recommendations, subject to your confirmation:

(a) the locks of both doors should be replaced or duplicated; no member of the staff other than the Communications personnel should hold keys. If at all possible, the keys should not be held by the Centre administration. I think they will, however, be adamant on this point and we should instruct the post to take the other precautions which I have suggested above. We might consider a suggestion made by Mr. Warren that a seal be placed on the inner door every night. As it is, the only advantage gained by installing new locks seems to be that they will be of a more secure type;

(b) the char staff should be excluded from the outer as well as the inner room. Mr. Coleman is seeing that the Communications staff are provided with adequate cleaning equipment;

(c) the Taylor safe should be moved from the storage room into the outer room and, after the combination is changed, should be used for the purpose for which it was intended. The most vital Communications material (tapes, OTP's, cypher books, spare parts) should be kept in it and any overflow stored in the Dominion safe, which should be retained in the same room. Combinations should be held by the Communications staff only. I have discussed this recommendation with Mr. Belanger since returning, and he is prepared to move the line machines to meet the requirement of the engineer that the safes must be against the outer wall;

(d) the question of the retention of the cage was deferred until I had spoken to Mr. Belanger. I now believe we shall have to agree to its removal. The staff are working under pressure and are cramped by its presence; its removal when it is no longer needed for the purpose for which it was intended will make their conditions of work bearable and will of course improve the efficiency of the office in every way. The cage, even if padlocked, would moreover offer little protection, as it is so constructed that panels of the wire mesh could be removed and replaced without difficulty. I have therefore asked Mr. Belanger to obtain solid covers and padlocks with which to secure each machine. He is seeing Captain Sheen about their procurement and will see that London, Washington and Paris are also supplied with them.

21. An additional recommendation which I should like to make is that the glass panel of the outer door be replaced by reinforced glass or steel.

...8

Document disclosed under the *Access to Information Act*
Document divulgué en vertu de la *Loi sur l'accès à l'information*

22. Mr. Belanger intends to recommend that the room adjoining the inner room (Mr. Cleveland's) be made available to the Communications staff. This arrangement would fit in with the reallocation of offices which I have suggested. There is a vital need of more space for Communications.

Safes

23. The combination of the safe used by the Communications staff has been changed regularly. The reason that the combination of the Taylor safe has never been changed is, I think, that the safe was really not being used. With both of the safes which are used for highly classified material made the responsibility of the Communications staff, we can be sure that the instructions regarding the combinations will be observed. A third safe of the strong-box type is used in the passport office for storing passports; a barred cabinet would give better protection. There are in addition a safe in the basement used for storing works of art and one in the administration office for a small amount of cash.

Classified Waste

24. There is no arrangement for the disposal of classified waste from offices other than the Communications Room. While the more highly classified material consists of incoming papers which are filed, some arrangement for carbons and spare copies is needed. The waste could be given to Miss McGoff for destruction by the Communications staff.

Permanent Delegation

25. The security arrangements at the Permanent Delegation are basically sound in that there are no locally engaged personnel and entrance during working hours is gained only by the one door opening on the reception room. The key to this door, however, is identical with that of the Consulate General, which is held by the locally engaged messenger, and the locks of the other doors giving on to the hallway must also be considered compromised. There is thus in effect no protection for classified material other than that afforded by cabinets and safe. Unless the need for caution is impressed on every member of the staff, there is moreover always the danger that locally engaged personnel from the Consulate General might unwittingly be given the freedom of the offices of the Permanent Delegation.

Cabinets

26. There is an adequate number of cabinets. Some in the sub-registry have already been barred and fitted with padlocks. On my suggestion Mr. Coleman is now having bars fitted to three additional cabinets in the sub-registry and to those used by Mr. Riddell's secretary, Mr. Carter and Mr. Crepault. The card index file is too large to be locked in the cabinet. As it would crowd the safe, the better solution might be to fit it with a padlock.

27. The cabinet with combination lock which has already been allocated can be put to good use. If we should place an order for additional cabinets of this type, we might earmark at least one more for this post.

...9

Document disclosed under the *Access to Information Act*
Document divulgué en vertu de la *Loi sur l'accès à l'information*

Safe

28. The Taylor safe is in the sub-registry and is being used as intended for top secret material. Its combination has been changed regularly and is held by a minimum number of persons. I have suggested to Mr. Coleman that the door of the sub-registry might be fitted with a new bolt action lock as a protection for the safe and cabinets. Although the char staff would as a result be excluded and our people faced with the cleaning of two rooms, more protection would be provided than by the alternative of moving the safe into the drivers' room and fitting that door with the new lock. In this event the drivers would find adequate accommodation in the sub-registry.

Classified Waste

29. The regulations regarding classified waste are being strictly adhered to. It is kept in a locked cabinet in the sub-registry and eventually burned in the basement incinerator by the Departmental messenger.

Diplomatic Bag

30. See my notes on the Consulate General.

Telephone Communications

31. The Permanent Delegation uses the same local switchboard, manned by locally engaged personnel, as the Consul General and the National Film Board. Incoming calls from Ottawa are received on this exchange rather than on Mr. Riddell's direct line. The risk would be reduced if calls from Ottawa for Mr. Riddell were made on his number (Circle 6-8344).

32. Mr. Desjardins was concerned about the eavesdropping of the locally engaged operators. Their addiction to this antidote for boredom had come to light in connection with calls of a personal nature. He asks whether the switchboard can be adapted to cut out the operator once a call is through. Such a device would be useful both from the points of view of security and personnel relations.

Assembly Delegation

33. As you will see from the attached rough plan, the arrangements for the Assembly Delegation are better than it was anticipated. They seem to me to be nearly as good as can be expected for a Delegation of this sort.

34. The Delegation occupies the whole twelfth floor of the Biltmore Hotel. The offices and conference room are under such close observation by the R.C.M.P. that it is very nearly impossible to enter this area without being accosted. As the lounge is in the wing used for sleeping accommodation, entrance to the office wing can be restricted to members of the Delegation and to other persons who are in the company of a member of the Delegation. By night, all doors connecting the offices are kept open and all office doors giving on to the hall are locked, except for the sub-registry, which is the post of the R.C.M.P. on duty. The guard's bedroom adjoins this room. This arrangement compensates for the lack of adequate cabinets.

...10

Document disclosed under the *Access to Information Act*
Document divulgué en vertu de la *Loi sur l'accès à l'information*

35. It was apparent that we are fortunate in having Constable Featherstone in charge of the detail again. He in turn has confirmed my impression of the high calibre of the three special constables.

36. Beyond the office area any control of classified papers of course becomes the responsibility of the individual concerned. It would be too much to hope that papers are not exposed in bedrooms, but from what I saw, a good part of the study, composition and dictation of papers is done in the offices and a minimum number of classified Departmental papers are taken to Lake Success.

Classified Waste

37. Classified waste is collected and burned by the R.C.M.P.

Diplomatic Bag

38. See my notes on the Consulate General.

Telephone Communications

39. In addition to telephones linked with the hotel exchange, there is at least one direct line. As with the Permanent Delegation, it would be advisable to make more use of the latter.

NATO Material

40. There is a small safe of dubious security in the sub-registry which contains material left over from the North Atlantic Conference held in New York. As it is quite unrelated to the work of the Delegation and would be more secure and useful here, the material should be shipped to Ottawa as soon as possible.

41. In conclusion, I should like to commend in particular the staff of the Permanent Delegation on their strict application of the security regulations. I believe this in part dates back to Mr. Starnes. An encouraging development noticeable in all three offices was that the concept of security which we have been trying to inculcate here seems to be gaining ground, if only by infiltration, with every new posting. My visit to New York may well have been an indirect result of misgivings about the security arrangements at the Consulate General which Mr. Bow expressed after his recent posting from Ottawa.

42. I appreciated very much the full co-operation given me by every one of our people in New York.

43. If you approve, I will at once draft despatches to New York to confirm the recommendations which I made there, incorporating in them your decisions on the questions which have been left in the balance.

V. C. MOORE

Document disclosed under the A[redacted]
Document divulgué en vertu de la *Loi sur l'accès à l'info*[redacted]

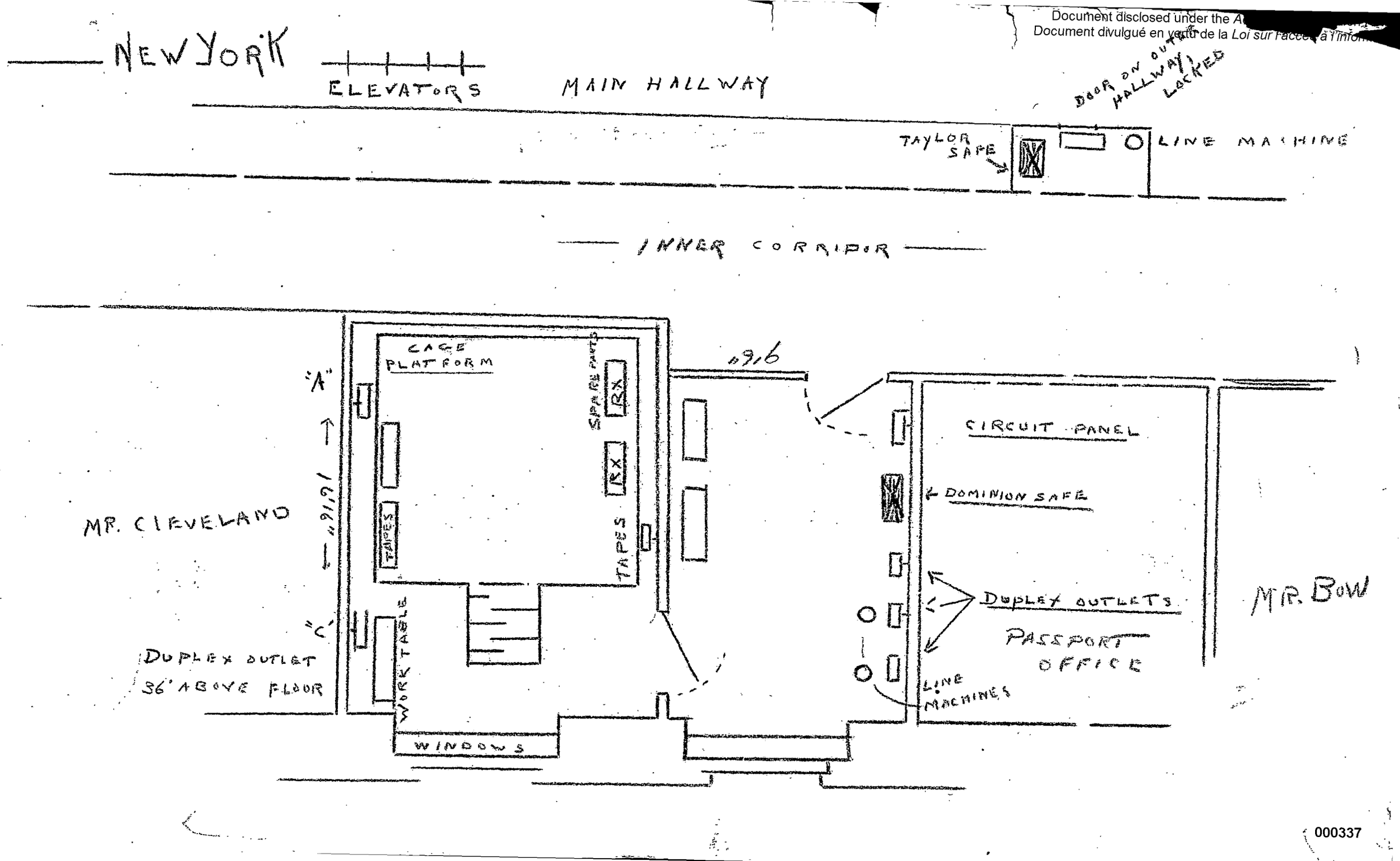

Document disclosed under the *Access to Information Act*
Document divulgué en vertu de la *Loi sur l'accès à l'information*

PERMANENT DELEGATION

5TH FLOOR
BRITISH EMPIRE BUILDING
ROCKEFELLER CENTRE.

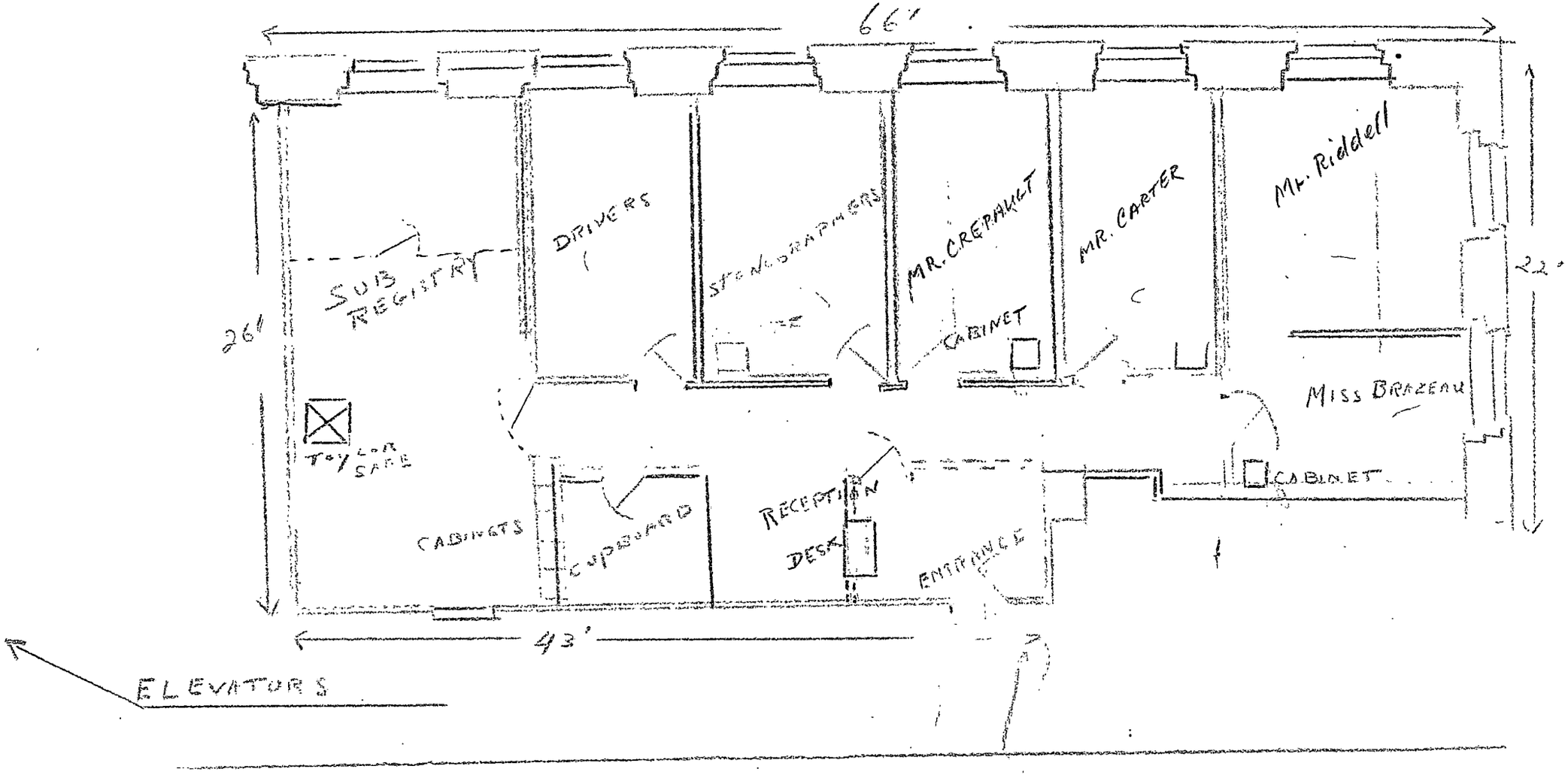

Document disclosed under the *Access to Information Act*
Document divulgué en vertu de la *Loi sur l'accès à l'information*

ASSEMBLY DELEGATION
12TH FLOOR
BILTMORE HOTEL

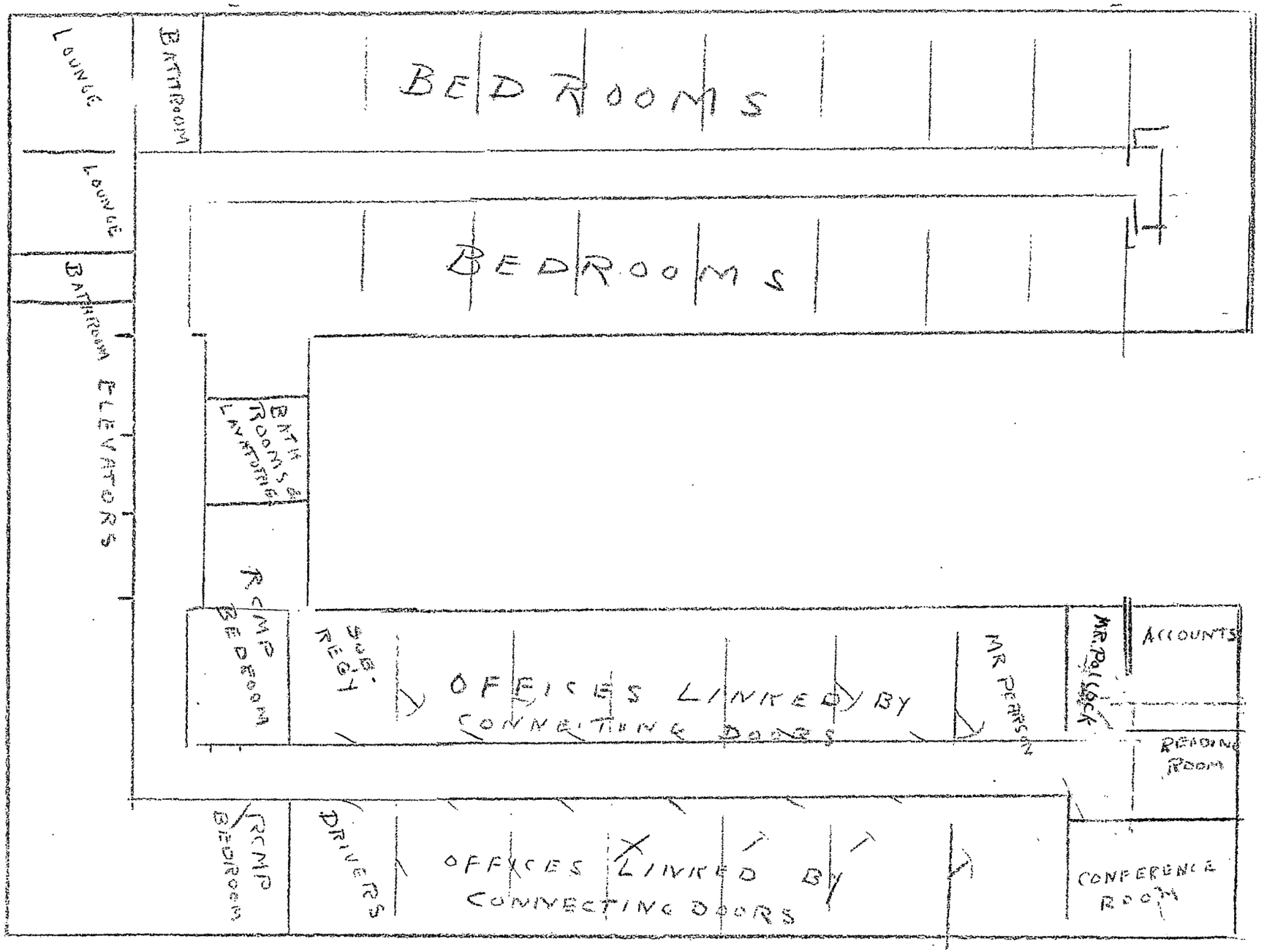

Document disclosed under the Access to Information Act
Document divulgué en vertu de la Loi sur l'accès à l'information

FILE COPY

5200-48-AF-40

CONFIDENTIAL

File

Miss M.E. to file

OTTAWA, June 8, 1948.

Dear Mr. Ignatieff:

Thank you for your letter of May 14, 1948, concerning the safe supplied to your Delegation. I discussed the questions raised in your letter with Mr. LeFeuvre and Mr. Starnes when I was in New York. I think there is nothing to add to these conversations. I enclose, however, for your information and guidance a copy of the latest security regulations which will form a chapter in the new consolidated Departmental regulations which are now being printed.

I should be glad if you would see that the principles laid down in these regulations are followed by the staff of the Delegation.

Yours sincerely,

G.G. Crean,
Security Officer.

George IGNATIEFF, Esq.,
Canadian Permanent Delegation
to the United Nations,
NEW YORK.

Document disclosed under the *Access to Information Act*
Document divulgué en vertu de la *Loi sur l'accès à l'information*

57-048-AE-40
Sub. 8 Chron. .. Final....

CANADIAN DELEGATION

DÉLÉGATION DU CANADA

TO THE UNITED NATIONS

SECRET

630 - Fifth Avenue, New York,
May 14, 1948.

File Conf

Dear Mr. Crean,

This is to advise you that the safe from J & J Taylor was installed in the office occupied by the Secretary of the Delegation, Mr. G.K. Grande, on Wednesday, May 12. It will be opened as soon as instructions regarding its use are drawn up and distributed.

On installation in the office, it was discovered that three ornamental heads to the door hinges were damaged, apparently having been bent in transit or while loading or unloading. A fourth ornamental head was missing. I do not think the operation of the safe is impaired in any degree by the damaged and missing hinge heads.

The installation of the safe was a major operation. A winch was used to load the safe to the truck and unload it at the front entrance to the International Building. Rockefeller Center porters were engaged to move the safe from the front platform to our office on the 33rd floor. This latter operation took five men three hours to complete. They had to lay steel trucks from the freight elevator to the office, a distance of about 100 yards and then had to move the safe forward an inch or two at a time by means of wooden crowbars. The wheels on the safe proved to be inadequate to bear the weight of the safe when it was mobile. These wheels appeared to be less than one inch in diameter and made of inferior

G.G. Crean, Esq.,
Dept. of External Affairs,
Ottawa, Canada.

....2

Document disclosed under the *Access to Information Act*
Document divulgué en vertu de la *Loi sur l'accès à l'information*

steel, with the result that they are now practically useless for further mobile work. This, of course, may be deliberately part of the specifications for safety reasons. In any event, I do not think there is much chance of surreptitious removal.

I have discussed the use of the safe with Mr. Ignatieff and it is planned that only official files, records, and securities will be kept in the safe. It is further planned that one officer and one member of the staff, probably Mrs. Gillespie, will have knowledge of the opening combination. Mrs. Gillespie will probably be placed in charge of opening the safe on arrival and will close it whenever it is necessary for her to leave the office. (She is located in the same office as Mr. Grande.) Mr. Grande will probably be the officer designated to have knowledge of the combination. The combination will be maintained in a sealed envelope in the Communications Office safe marked to be opened only by myself or Mr. Grande.

If you have any further suggestions concerning the use of the safe, I would be obliged to hear from you. I am sending you this letter as I thought it advisable to let you have a report concerning the condition of the safe on arrival and our plans for its use.

Yours sincerely,

G. Ignatieff.

Document disclosed under the *Access to Information Act*
Document divulgué en vertu de la *Loi sur l'accès à l'information*

FILE COPY

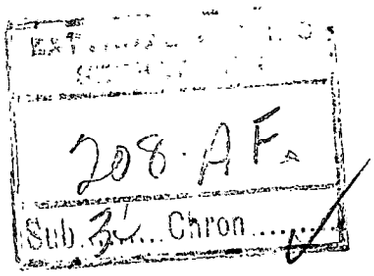

SECRET

Please open new secret file.
"Security arrangements at Delegation to U.N."
GLB.

OTTAWA, May 5, 1948.

File.

Dear Mr. Ignatieff:

You are being advised separately of the despatch to you of a safe which has been manufactured to our specifications by Messrs. J. & J. Taylor, for use in the Delegation Office in New York. I enclose for your information a copy of the instructions concerning the combination of the safe and the method of changing the combination. You will note that the combinations of the two locks are set, at the present time, as follows:

Upper lock: 94-37-86-48

Lower lock: 53-88-33-72

As this safe has been specially made to our own design, every precaution should be taken to avoid compromising the combination or the mechanism of the safe. No repairs to the safe should be carried out without prior reference to this Department. I should be grateful if you would take every precaution to avoid leaving any note of the combination where it might be available to any unauthorized person.

The combination should be changed prior to the safe being put into use. The key for changing the combination will be found in the safe. The combination should be changed every three months.

Yours sincerely,

GLB

Under-Secretary of State
for External Affairs.

George IGNATIEFF, Esq.,
Canadian Permanent Delegation
to the United Nations,
NEW YORK.

Document disclosed under the Access to Information Act
Document divulgué en vertu de la Loi sur l'accès à l'information

TELETYPE MESSAGE

J.G.SMITH/WHB

TWO COPIES (ONE SIGNED) OF THIS MESSAGE TO BE DELIVERED TO ROOM 309—EAST BLOCK

To: THE CANADIAN ~~CONSUL GENERAL~~ Commercial Delegate, NEW YORK

From: **THE SECRETARY OF STATE FOR EXTERNAL AFFAIRS - OTTAWA**

Name of Sender Mr. J.G. Smith (Typewritten) Authority (Signature of person authorizing message)

Date April 22/48 Room No. 335 Bldg. East Block Local 2819

CYPHER (X) OR EN CLAIR ( ) SECRET

File No.

PLEASE USE DOUBLE SPACING. THE APPROPRIATE SECURITY OR URGENCY PREFIXES, WHEN REQUIRED BY THE CONTENTS, SHOULD BE TYPED AT THE BEGINNING OF THE MESSAGE.

No. 394

Following for LeFeuvre From Hemsley Begins

EXTERNAL AFFAIRS SECRET FILE
208 AFS

Reference your Savingsgram No. 7 of April 20. Verified with Taylors that safe is to be sent on April 27 by C.N.R. Documents will be sent same day.

CYPHER DIVISION
23

Document disclosed under the *Access to Information Act*
Document divulgué en vertu de la *Loi sur l'accès à l'information*

Mr Smith
Any news on this one?

EXTERNAL AFFAIRS
SECRET FILE
208-AF
Sub. 34 ... Chron

S.G. LeFeuvre/L.

FROM: THE CANADIAN PERMANENT DELEGATE. NEW YORK.

TO: THE SECRETARY OF STATE FOR EXTERNAL AFFAIRS. OTTAWA.

[redacted]

SECRET

SAVINGSGRAM NO. 7

New York, April 20, 1948.

Following for Hemsley from LeFeuvre, Begins:

With reference to your Cypher-TK telegram No. 185 of February 17. Have not yet received any word of shipment of safe by Taylors. Please advise. Ends.

CANADIAN PERMANENT DELEGATE.

Better shake Taylors up about it
/DB

Document disclosed under the *Access to Information Act*
Document divulgué en vertu de la *Loi sur l'accès à l'information*

FROM: THE CANADIAN PERMANENT DELEGATE TO THE UNITED NATIONS, NEW YORK

TO: THE SECRETARY OF STATE FOR EXTERNAL AFFAIRS, OTTAWA

REFERRED TO THE MINISTER ON FEB 12 1948

TELETYPE

UNNUMBERED

NEW YORK CITY, February 12, 1948.

EXTERNAL AFFAIRS RECORDS
File No. 208-AF.
Sub... Chron. ✓ Filed...

Unnumbered. Following for Matthews, Begins:

Our message No. 186 of February 11th should be No. 158.

no security of top secret papers in admin Feb 12/48

CANADIAN PERMANENT DELEGATE

Document disclosed under the *Access to Information Act*
Document divulgué en vertu de la *Loi sur l'accès à l'information*

OTTAWA DIV.
EXTERNAL AFFAIRS

09156

1948 FEB 12 PM 1:46

1948 FEB 12 PM 2 40

DEPT. OF EXTERNAL AFFAIRS.

Document disclosed under the *Access to Information Act*
Document divulgué en vertu de la *Loi sur l'accès à l'information*

TELETYPE MESSAGE

T[redacted] (ONE SIGNED) OF THIS MESSAGE TO BE DELIVERED TO ROOM 309—EAST BLOCK

To: THE CANADIAN PERMANENT DELEGATE TO THE UNITED NATIONS, NEW YORK

From: **THE SECRETARY OF STATE FOR EXTERNAL AFFAIRS - OTTAWA**

File JEB

Name of Sender W.D.Matthews/JEB (Typewritten) Authority (Signature of person authorizing message)

Date 12/2/48 Room No. Bldg. Local

CYPHER (X) OR EN CLAIR ( )

File No.

PLEASE USE DOUBLE SPACING. THE APPROPRIATE SECURITY OR URGENCY PREFIXES, WHEN REQUIRED BY THE CONTENTS, SHOULD BE TYPED AT THE BEGINNING OF THE MESSAGE.

No. 150 IMMEDIATE TOP SECRET Enclosure

208-AF

Following for McNaughton From Matthews Begins

Your teletype No. 158, of February 11th.

Taylors have promised delivery of safe for shipment to New York at end of this month. Since safes purchased locally are not considered to be of any great security value from our point of view I do not think we would be justified in incurring expenditure you suggest.

EXTERNAL.

OIL

CYPHER DIVISION
SENT
FEB 12 1948
Department of External Affairs

Document disclosed under the Access to Information Act
Document divulgué en vertu de la Loi sur l'accès à l'information

000349

CYPHER DIV.
EXTERNAL AFFAIRS

1948 FEB 12 PM 5 : 30

Document disclosed under the *Access to Information Act*
Document divulgué en vertu de la *Loi sur l'accès à l'information*

Copy of telegram for Mr. Grean.

Miss Buckley Records. Please open new Secret File on Security arrangements at the Canadian Permanent Delegation to the UN. GLB.

J.G. SMITH/WHB
Ottawa, January 27, 1948.

EXTERNAL
208-AF(s)
34 34

Messrs. J. & J. Taylor, Ltd.,
145 Front St. East,
TORONTO 2, Ont.

Reference your letter December 4. Please have safe delivered to Canadian Permanent Delegation to the United Nations, 630 Fifth Avenue, New York, N.Y. Do not place any insurance.

Administrative Officer,
Department of External Affairs.

Chg. External Affairs.

Document disclosed under the *Access to Information Act*
Document divulgué en vertu de la *Loi sur l'accès à l'information*

CANADIAN DELEGATION

DÉLÉGATION DU CANADA

620 Fifth Avenue,
New York 20, N.Y.,
January 13, 1948.

208-AF
Sub

SECRET

Dear Bill,

For the sake of our peace of mind in the Delegation I wonder if you could find out for me when we are likely to receive the safe for the use of the Delegation.

You may be interested to know that instructions have been issued to all members of the Delegation staff that the last member to leave any one of the offices is to lock the door behind him, is to insure that all papers and documents having a security classification are placed in cabinets which are then to be locked, and that all waste material in security classifications is to be disposed of as secret waste.

Yours sincerely,

Bud LeFevre

sgl/jtm

G. G. Crean, Esq.,
Department of External Affairs,
Ottawa, Canada.

Document disclosed under the Access to Information Act
Document divulgué en vertu de la Loi sur l'accès à l'information

FILE COPY

GGCrean/McG

EXTERNAL AFFAIRS
CANADA

SECRET & PERSONAL

208-AF.
Sub 73

REPLY TO BE ADDRESSED TO:
THE UNDER-SECRETARY OF STATE
FOR EXTERNAL AFFAIRS
OTTAWA

OTTAWA, January 26, 1948.

Dear Bud:

Reference your enquiry of January 13, 1948, concerning the supplying of a safe to the Delegation, Messrs. Taylor informed us on December 4th that a safe would be available in approximately a month's time. I am making enquiries about it, and it should accordingly be delivered in New York at the end of the month. I shall ask Smith in Supplies, however, to let you know precisely the date of delivery.

Yours sincerely,

G.G. Crean.

S.G. LeFeuvre, Esq.,
Canadian Delegation to the
Security Council of the United Nations,
NEW YORK.